STANDARD CONSTRUCTION DETAILS

CITY OF LEANDER, TEXAS

REVISED NOVEMBER 2015

Number	Standard	Approval Date
Series 100	**Pipe and Appurtenances**	
520S-3	Double Water-Wastewater Service	8/2/2012
101-1	Water Service Connections	10/29/2015
101-2	Standard Gate Valve	11/22/1996
101-3	Standard Air Release Valve	11/22/1996
101-4	Standard Fire Hydrant Assembly	6/19/2015
102-2	Wastewater Deep Service Connection	11/22/1996
103-1	Thrust Blocking Detail	11/22/1996
104-1	Typical Pipe Trench and Embedment	11/22/1996
104-2	Flowable Backfill Detail	7/20/2012
105-1	Pipe Concrete Encasement	11/22/1996
COA 506S-8	Precast Manhole with Drop Inlet on Precast Base	8/31/2011*
COA 506S-10	Wastewater Manhole on Precast Base	8/31/2011*
107-1	Sanitary Sewer Manhole Cover	2/4/2014
107-2	Storm Sewer Inlet Cover (Locking)	2/4/2014
107-3	Storm Sewer Manhole Cover (Heavy Duty)	2/4/2014
107-4	Manhole Casting Adjustment	11/5/2015
Series 200	**Concrete and Structures**	
430S-2	Reinforced Curb and Gutter	1/4/2010*
201-1	Recessed Inlet Detail	11/22/1996
201-2	Standard 10' Curb Detail	11/22/1996
COA 433S-1	Type I Driveway	10/19/2009*
COA 433S-2	Type II Driveway	2/24/2010*
202-2	Driveway Apron with Culvert Pipe	2/26/1997
202-3	Safety End for Culvert Pipe	2/26/1997
COA 432S-1	Sidewalk (Sheets 1 & 2)	3/26/2008*
204-1	Typical Residential Street Section	11/22/1996
204-2	Typical Collector Street Section	11/22/1996
Series 300	**Environmental**	
COA 639S-1	Rock Berm	8/24/2010*
COA 641S-1	Stabilized Construction Entrance	5/23/2000*
COA 642S-1	Silt Fence	9/1/2011*
303-1	Concrete Washout	1/30/2015
303-2	Tree Protection	8/21/2015
Series 400	**Traffic Control**	
400-1	Traffic Barricade Type III	11/22/1996
401-1	Street Signs	11/20/2015
401-2	Street Name Sign Blades	11/20/2015
401-3	POZ-LOC Foundation	3/27/2014
402-1	Standard Lighting Pole	1/30/2014

* City of Austin Standards Manual Approval

Use City of Austin Standards where a City of Leander Standard does not exist.

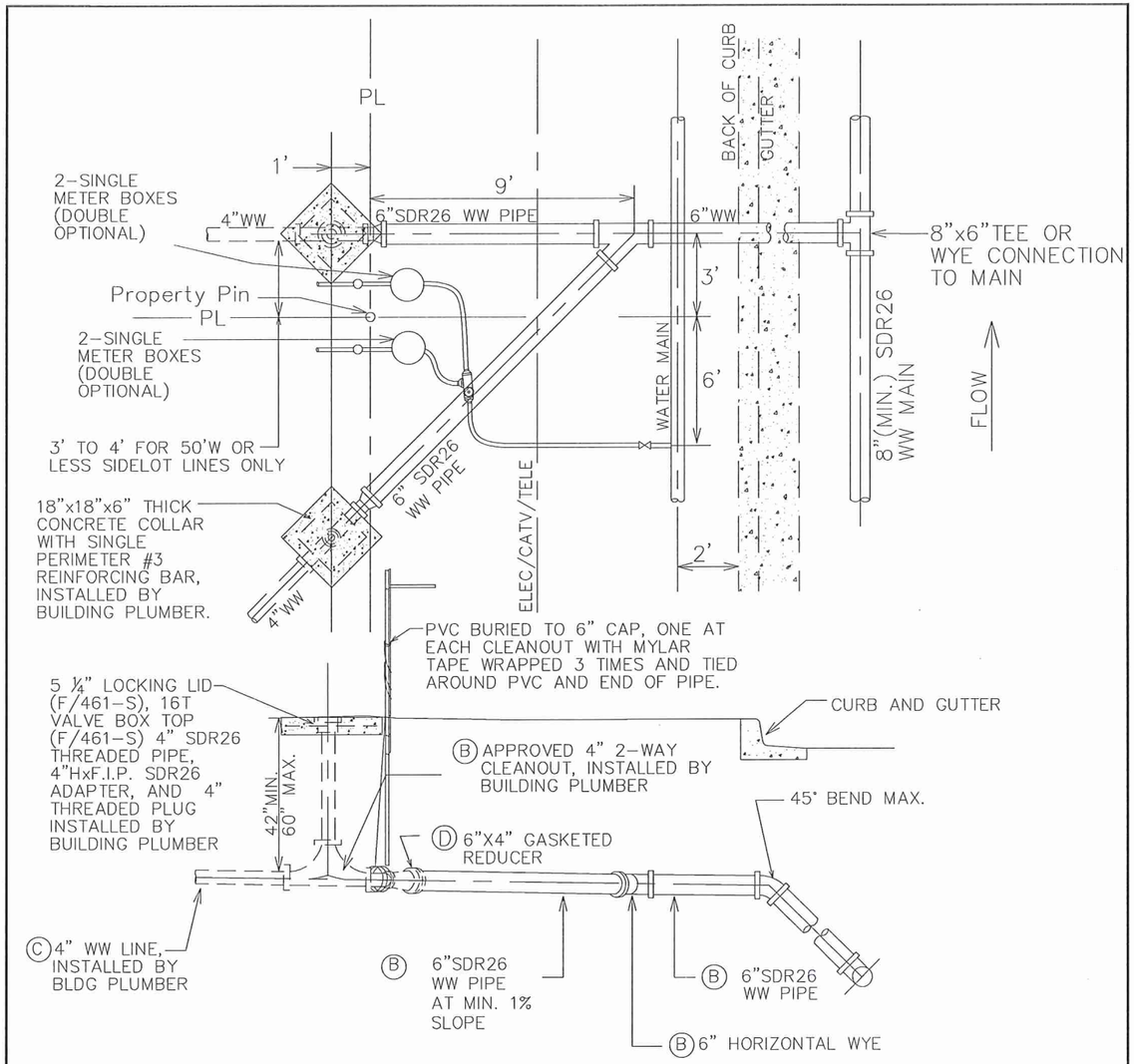

NOTES:

Ⓐ THESE DIMENSIONS MAY BE INCREASED BY WIDTH OF WALK OR INLET IF LOCATED AT CURB.

Ⓑ TO BE INSTALLED AND INSPECTED DURING SUBDIVISION CONSTRUCTION. 2-WAY CLEANOUTS INSTALLED BY BLDG. PLUMBER. UTILITY CONTRACTOR INSTALLS SERVICE STUB WITH PLUG OR CAP.

Ⓒ BUILDING INSPECTION DEPARTMENT SHALL INSPECT CUSTOMER'S WASTEWATER LINE, EXCEPT CONNECTION AT WYE, AND WATER LINE TO CUSTOMER'S SHUT-OFF-VALVE.

Ⓓ TAPS INSPECTION OFFICE INSPECTS CONNECTIONS OF CUSTOMER'S WATER AND WASTEWATER LINES TO CITY SYSTEMS.

STATE OF TEXAS
WAYNE S. WATTS
86134
LICENSED
PROFESSIONAL ENGINEER
08/02/12

City Of Leander, Texas
DETAIL #520S-3
1 OF 2
NEW RESIDENTIAL DOUBLE WATER / WASTEWATER SERVICE DETAIL

NOTES

1. DURING SUBDIVISION CONSTRUCTION UTILITY CONTRACTOR INSTALLS WASTEWATER CONNECTION TO MAIN, 6" STUB WITH HORIZONTAL WYE FOR DOUBLE SERVICES, 6" SERVICE BRANCH, AND, PLUG(S) FOR 6" SERVICE BRANCH AT PROPERTY LINE END. CONTRACTOR TIES MYLAR TAPE TO END OF 6" STUB, WRAPS AROUND LENGTH OF PVC BURIED TO THE DEPTH OF THE 6" STUB AND TIES TO TOP OF PVC EXTENDING A MINIMUM OF 2 FEET ABOVE GROUND.

   ALL WASTEWATER PIPING SHALL HAVE ELASTOMERIC GASKET TYPE JOINTS AND SHALL SLOPE DOWNWARD TO MAIN 1% (1/8" PER FOOT) MINIMUM TO 45° MAXIMUM. DEPTH OF SERVICE STUB AT PROPERTY LINE WILL BE SHOWN ON PLANS BY ENGINEER IF GREATER THAN 6', OTHERWISE THE INSTALLED DEPTH WILL TYPICALLY BE 4' TO 6'. IF WASTEWATER SERVICE LINE TO MAIN REQUIRES DEFLECTION EXCEEDING 45°, REFER TO DETAIL 520-6. UTILITY CONTRACTOR ALSO INSTALLS WATER CONNECTION TO MAIN WATER PIPE, FITTINGS AND VALVES INCLUDING STOP VALVE-REFER TO DETAILS 520-9 AND 520-11 FOR LOCATION OF STOP VALVES. ALL INSTALLATIONS SHALL BE MADE IN ACCORDANCE WITH INFORMATION SHOWN ON APPLICABLE STANDARD DRAWINGS AND WILL BE INSPECTED BY CITY OF LEANDER CONSTRUCTION INSPECTION PERSONNEL.

2. CUSTOMER REMOVES PLUG FROM 6" SERVICE LINE AT PROPERY LINE, INSTALLS 6" BY 4" REDUCER, 2-WAY CLEANOUT, RISER FOR CLEANOUT, 4" ADAPTER, 4" THREADED PLUG, VALVE BOX TOP WITH 5 1/4" LOCKING LID, CONCRETE COLLAR, AND 4" SERVICE LINE AT EACH 4" BRANCH. IF WASTEWATER WILL NOT SATISFACTORILY FLOW BY GRAVITY TO SEWER MAIN ADJACENT TO PROPERTY, PUMP EQUIPMENT MUST BE PROVIDED BY THE CUSTOMER AS PART OF CUSTOMER'S WASTEWATER SYSTEM. CUSTOMER ALSO INSTALLS WATER LINES INCLUDING FITTINGS AND VALVES ON BOTH SIDES OF METER, AND INSTALLS METER BOXES AND COVERS ALL IN ACCORDANCE WITH INFORMATION ON APPLICABLE STANDARD DRAWING. A VENTED SPACER MAY BE USED TO ASSURE PROPER SPACING AND ALIGNMENT OF METER FITTINGS.

3. CUSTOMER IS RESPONSIBLE FOR METER BOX AND PIPING SYSTEM UNTIL METER IS INSTALLED AND WASTEWATER IS CONNECTED. ANY MISSING OR DAMAGED PARTS SHALL BE REINSTALLED BY CUSTOMER WHO SHALL GUARANTEE, FOR A PERIOD OF TWO (2) YEARS FROM DATE OF ACCEPTANCE, THAT CONNECTIONS TO CITY SYSTEMS ARE FREE FROM DEFECTS IN WORKMANSHIP OR MATERIAL. CUSTOMER ALSO HAS THE RESPONSIBILITY TO ASSURE THAT ALL VALVES AND STOPS, METER BOX AND 2-WAY-CLEANOUTS REMAIN CLEAR OF SIDEWALKS AND OTHER OBSTRUCTIONS.

4. CITY OF LEANDER ACTIVITY IS LIMITED TO INSTALLATION OF THE WATER METER AND INSPECTION OF CONNECTIONS TO THE CITY'S WATER AND WASTEWATER SYSTEMS. FOR MAINTENANCE PURPOSES, THE CITY'S RESPONSIBILITY ENDS AT THE CUSTOMER'S WATER CUT-OFF VALVE AND AT THE CUSTOMER'S WASTEWATER CONNECTION TO THE 2-WAY-CLEANOUT.

5. PIPING AND TUBING IN STREET RIGHT-OF-WAY AND IN EASEMENT AREA SHALL BE BEDDED IN GRANULAR MATERIALS AS REQUIRED BY CITY OF AUSTIN STANDARD SPECIFICATION SECTION 510.3 (14); MATERIALS SHALL BE AS SPECIFIED IN 510.2 (2)(A) AND (3)(B); BACKFILL ABOVE THE GRANULAR BEDDING SHALL BE AS REQUIRED BY SECTION 510.3 (25). SERVICE LINES IN THESE AREAS SHALL HAVE A MINIMUM COVER BELOW FINAL STREET GRADE OF 42". ANY EXCEPTION MUST BE SPECIFICALLY APPROVED BY THE ENGINEER.

6. NO METER BOX OR CLEAN OUT SHALL BE SET IN SIDEWALK OR DRIVEWAY AREA WITHOUT WRITTEN APPROVAL FROM THE CITY ENGINEERING DEPT.

STATE OF TEXAS
WAYNE S. WATTS
86134
LICENSED
PROFESSIONAL ENGINEER
08/02/12

City Of Leander, Texas
DETAIL #520S-3
2 OF 2
NEW RESIDENTIAL DOUBLE WATER / WASTEWATER SERVICE DETAIL

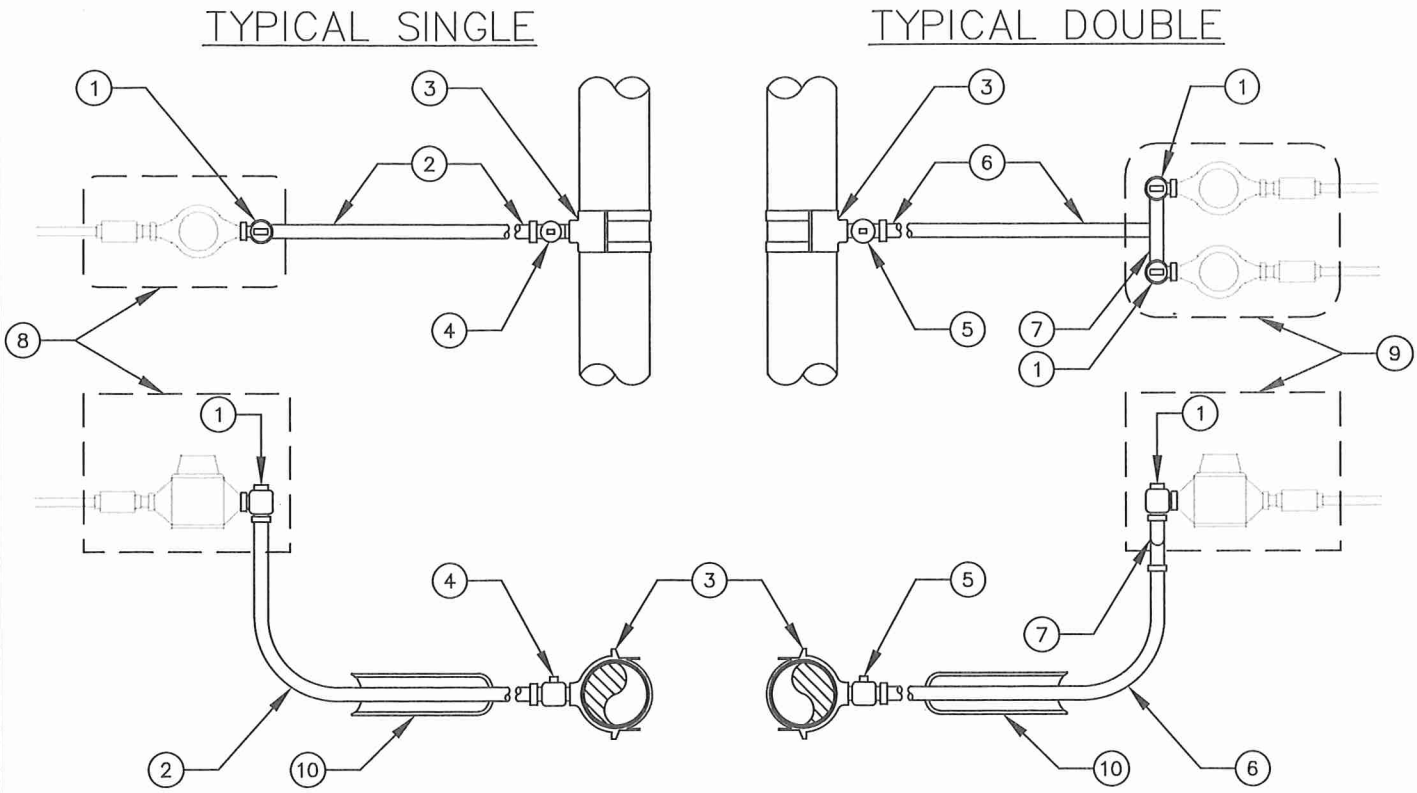

ITEM	SIZE & DESCRIPTION	SPEC. OR EQUAL
1	1" X 1" ANGLE METER STOP, LOCKING	AS APPROVED
2	1" SDR9 POLYETHYLENE TUBING	CLASS 250
3	EPOXY COATED DUCTILE IRON TAPPING SADDLE	AS APPROVED
4	1" CORPORATION STOP	AS APPROVED
5	1 1/2" CORPORATION STOP	AS APPROVED
6	1 1/2" SDR9 POLYETHYLENE TUBING	CLASS 250
7	BRASS U-BRANCH, 1 1/2" X 1"	FORD, OR EQUAL
8	METER BOX, SINGLE	DFW37F-12-1CA, OR EQUAL
9	METER BOX, DOUBLE	DFW39F-12-1CA, OR EQUAL
10	3" SCH. 40 PVC SLEEVE FOR LONG SIDE SERVICES (TYP.)	

NOTES:

1. SERVICE SADDLE SHALL BE WRAPPED COMPLETELY WITH 8 MIL POLYETHYLENE FILM.
2. PIPING AND TUBING IN STREET RIGHT-OF-WAY SHALL BE BEDDED IN GRANULAR MATERIALS.
3. BRANCH CONNECTION AND BOTH ANGLE METER STOPS SHALL BE INSTALLED PRIOR TO FIRST METER INSTALLATION.
4. SLEEVES FOR LONG-SIDE SERVICE TO BEGIN AND TERMINATE 6" BEHIND BACK OF CURB.
5. TOP OF METER BOXES SHOULD BE 1" ABOVE GROUND.
6. METER BOX SHALL BE BEHIND CURB AT ROW/PROPERTY LINE OR EASEMENT. METER BOX SHALL NOT BE INSTALLED IN SIDEWALK, DRIVEWAY OR VEHICULAR TRAVEL AREA.
7. 1" X 3/4" BRASS METER BUSHING REQUIRED FOR 5/8" AND 3/4" METERS.
8. AXIS OF METER ASSEMBLY (LINE THROUGH METER STOP, METER, CHECK VALVE, PIPING AND OWNER'S CUTOFF) SHALL BE 11" BELOW TOP OF BOX. METER BOXES ARE SIZED TO ACCOMMODATE METER STOP, WATER METER AND CHECK VALVE.

STATE OF TEXAS
WAYNE S. WATTS
86134
LICENSED
PROFESSIONAL ENGINEER

Wayne S. Watts
10/29/15

City Of Leander, Texas

DETAIL #101-1
WATER SERVICE CONNECTIONS

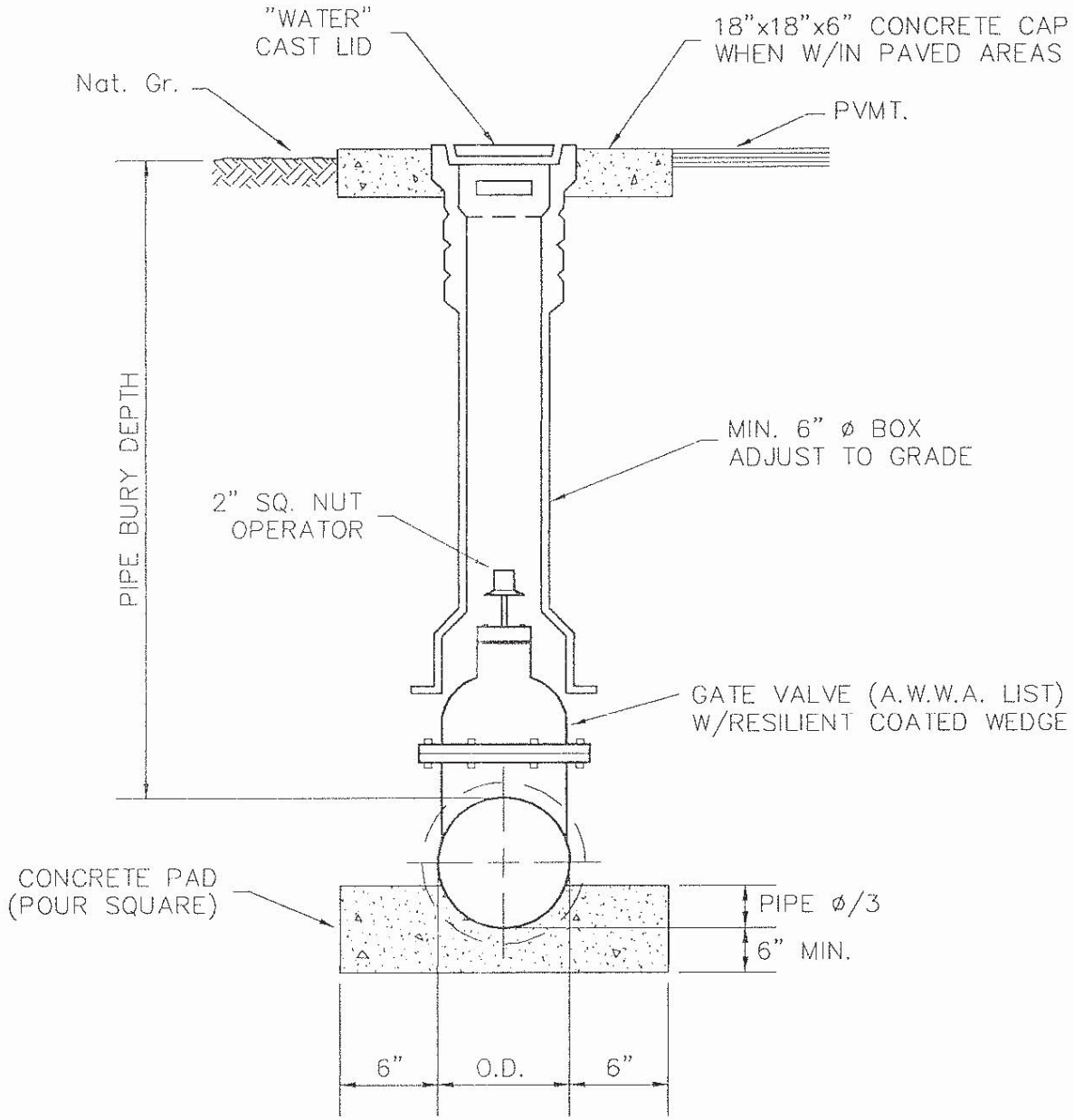

CITY OF LEANDER, TEXAS		
Scale: NTS	Approved / Date 1/22/02	Drawn by: RPW
STANDARD GATE VALVE		Detail No. 101-2

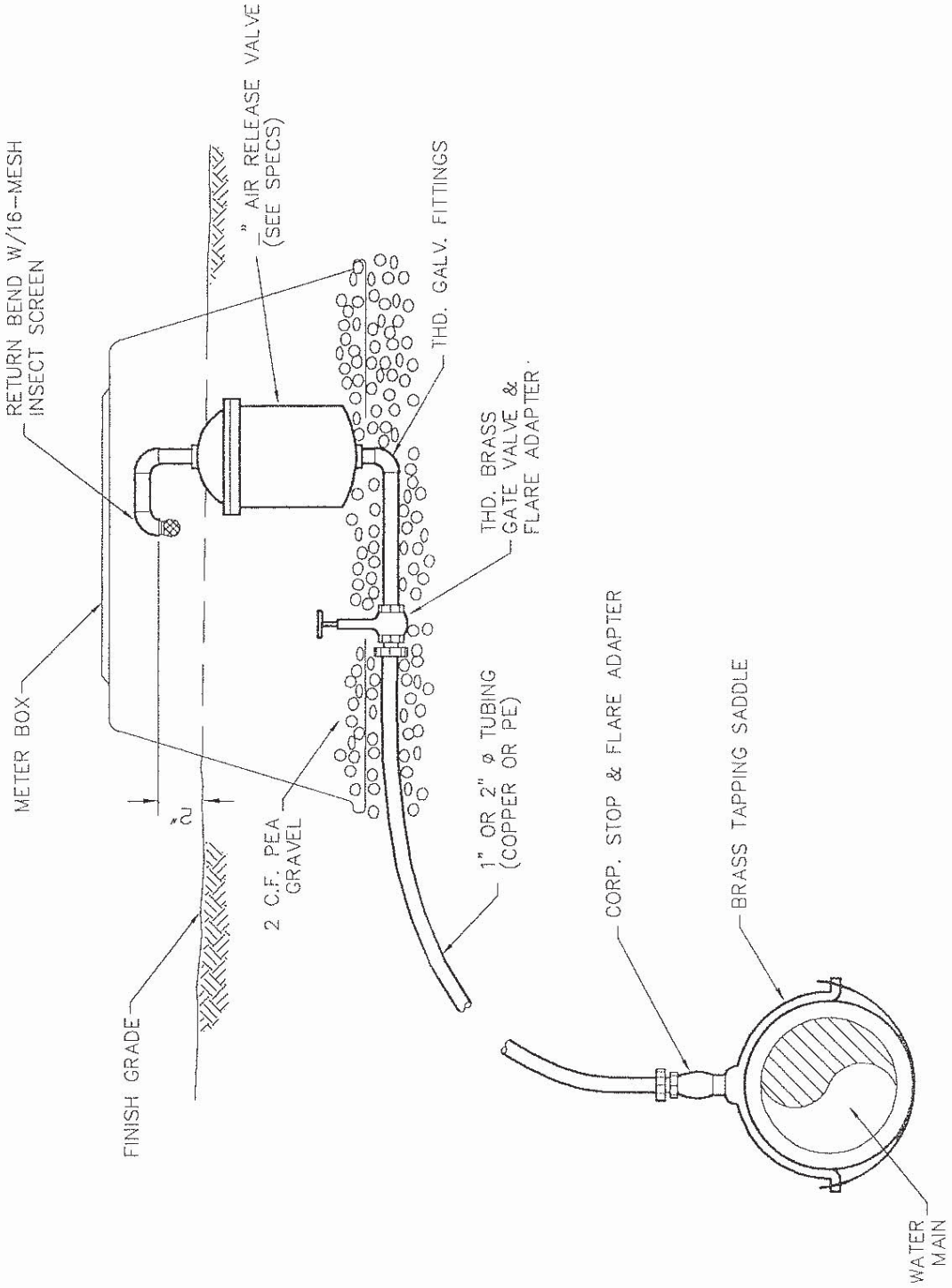

CITY OF LEANDER, TEXAS		
Scale: NTS	Approved 11/22/02 Date	Drawn by: RPW
STANDARD AIR RELEASE VALVE		Detail No. 101-3

FIRE HYDRANTS LACKING INTEGRAL STORZ CONNECTOR SHALL BE REJECTED (NO STORZ ADAPTERS ALLOWED)

RATED FLOW	FIRE HYDRANT BONNET COLOR
1,500 G.P.M. +	LIGHT BLUE
1000 – 1499 G.P.M.	GREEN
500 – 999 G.P.M.	ORANGE
BELOW 500 G.P.M.	RED

NOTES:

1. FIRE HYDRANT SHALL BE AVK SERIES 2780 OR APPROVED EQUAL VIA SUBMITTAL PROCESS. THE PRIMARY FEATURES REQUIRED INCLUDE: FACTORY INSTALLED INTEGRAL 5–INCH STORZ PUMPER NOZZLE; 1.5–INCH PENT OPERATING NUT ON NOZZLE CAP; OPEN LEFT; FACTORY PAINTED.
2. HYDRANTS SHALL BE ORDERED ALUMINUM IN COLOR. HYDRANTS WILL NOT BE ACCEPTED IF PAINTED AFTER DELIVERY.
3. ALL DUCTILE OR CAST IRON FITTINGS AND/OR PIPE SHALL BE POLYWRAPPED.
4. ALL HYDRANTS SHALL BE EQUIPPED WITH A BREAKAWAY FLANGE. ALL FITTINGS SHALL BE EQUIPPED WITH JOINT RESTRAINT "MEGALUG" OR APPROVED EQUAL. ALL ANCHOR FITTING TO BE CONCRETE THRUST BLOCKED.
5. HYDRANTS SHALL BE FLOW TESTED BY CONTRACTOR AND RESULTS PROVIDED TO FIRE MARSHAL'S AND CITY ENGINEER'S OFFICES. THE HYDRANT BONNET TO FLANGE AND NOZZLE CAPS SHALL BE PAINTED THE APPROVED COLOR CORRESPONDING WITH THE APPROPRIATE FLOW RATE.
6. BLUE, BI–DIRECTIONAL REFLECTIVE PAVEMENT MARKER, ULTIMATE WET NIGHT VISIBILITY SHALL BE INSTALLED PER MANUFACTURER RECOMMENDATION AT THE CORRESPONDING ROADWAY STATION OFFSET 6 INCHES FROM CENTER OF STREET TO THE SIDE HYDRANT IS LOCATED. AT INTERSECTIONS, MARKERS SHOULD BE PLACED ON BOTH ROADWAYS ADJACENT TO HYDRANT.

LOCATION:

7. SET F.H. ON LOT LINE (EXTENDED WHEN POSSIBLE)
8. F.H. SHALL BE NO CLOSER THAN 18 INCHES FROM EXISTING OR PROPOSED SIDEWALKS
9. F.H. LOCATED AT STREET INTERSECTIONS SHALL BE PLACED A MINIMUM OF 10 FEET FROM RADIUS TANGENT POINT
10. NO OBSTRUCTIONS SHALL BE PERMITTED WITHIN 3 FEET IN ALL DIRECTIONS FROM F.H.
11. 5–INCH STORZ PUMPER NOZZLE SHALL FACE THE FIRE LANE OR TRAVEL WAY UNLESS OTHERWISE NOTED ON PLANS.

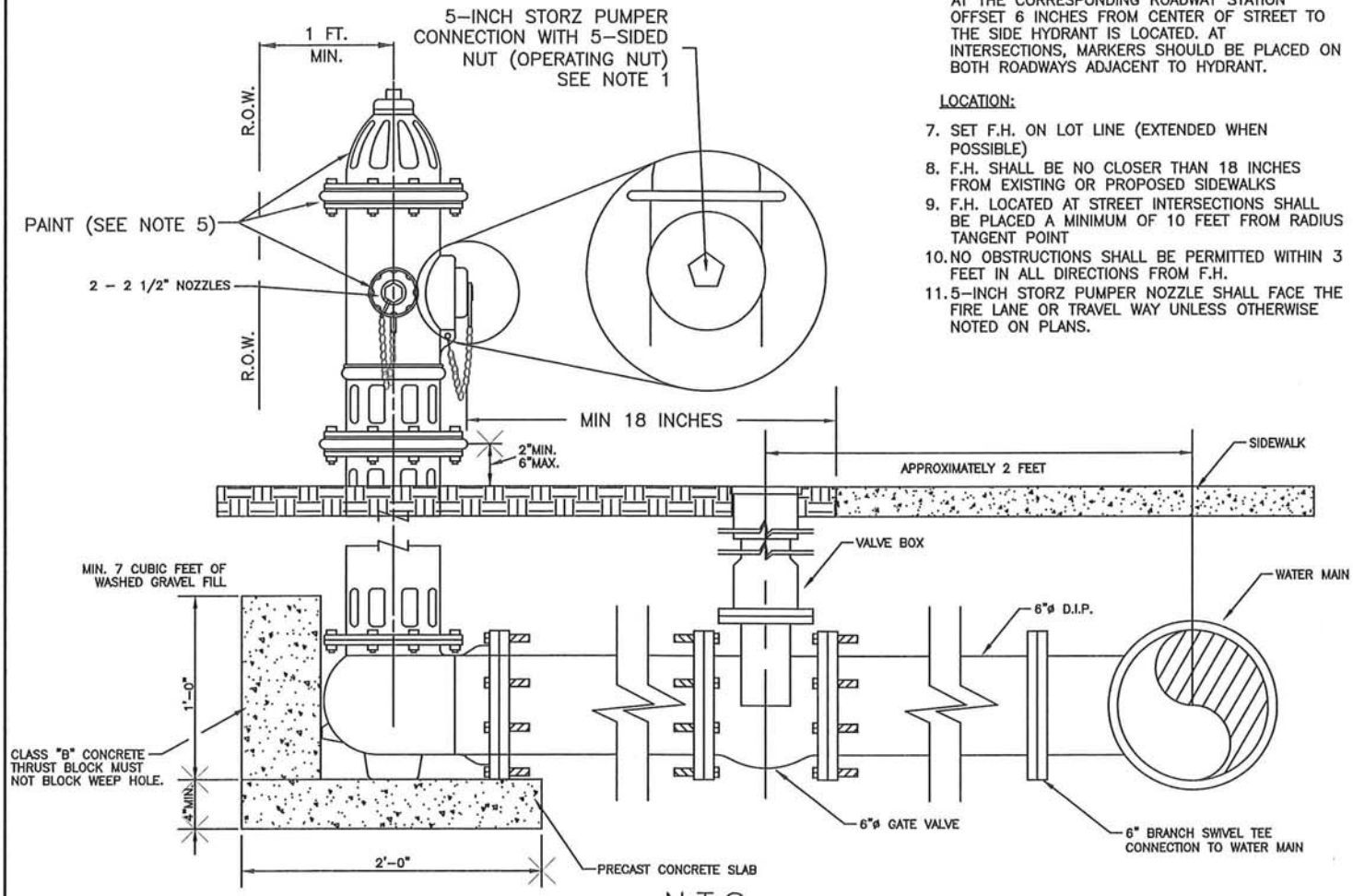

N.T.S.

NOTE: STANDARD FIRE HYDRANT ASSEMBLY INCLUDES ALL COMPONENTS SHOWN HEREIN, EXCEPT WATER MAIN, INSTALLED COMPLETE AND IN–PLACE.

STATE OF TEXAS
WAYNE S. WATTS
86134
LICENSED
PROFESSIONAL ENGINEER

Wayne S. Watts
06/19/15

City Of Leander, Texas

DETAIL #101-4

STANDARD FIRE HYDRANT ASSEMBLY

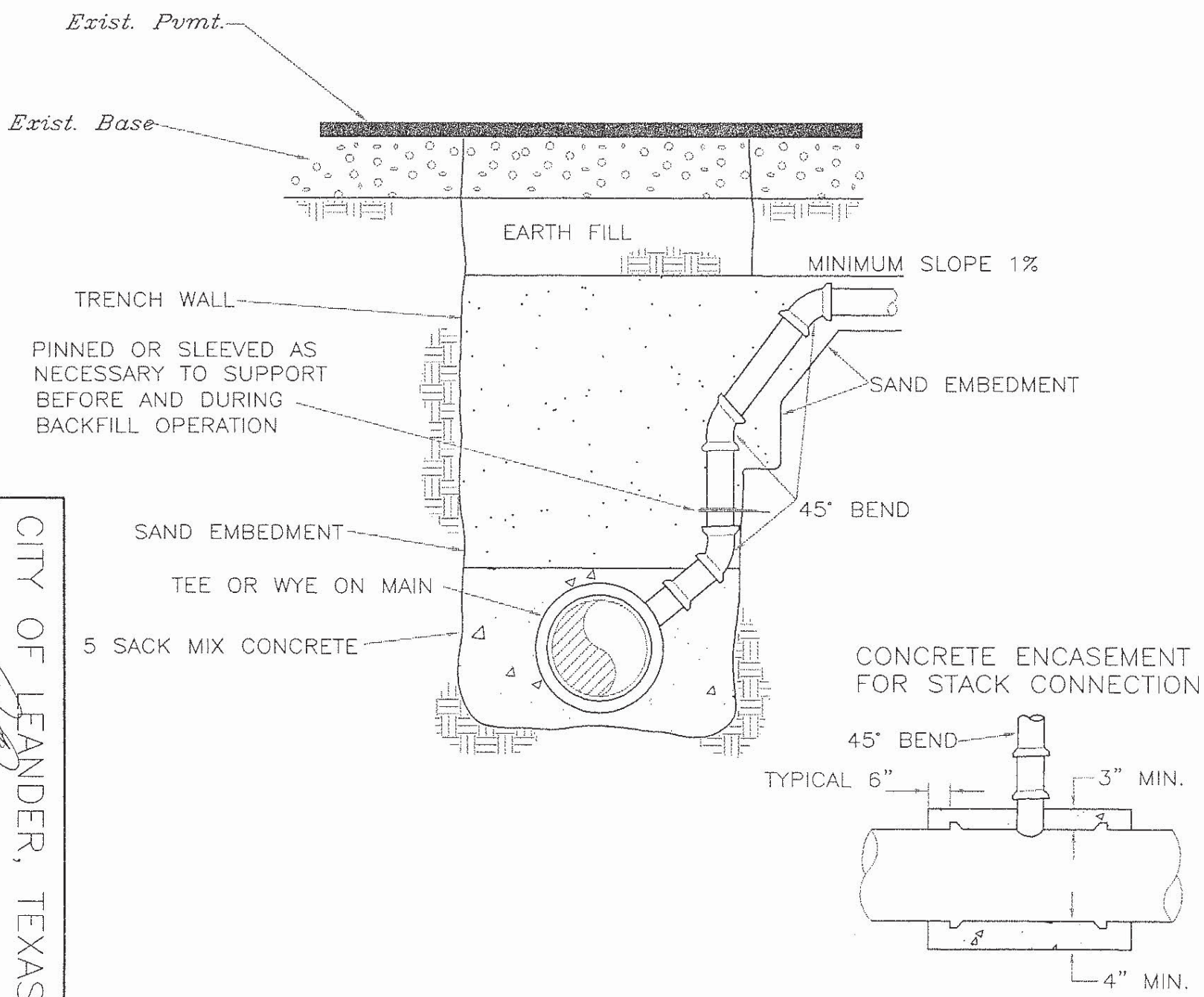

CITY OF LEANDER, TEXAS

WATER & WASTEWATER DEEP SERVICE CONNECTION

Scale: NTS

Approved

Date

Drawn by: SDK

Detail No. 102-2

THRUST BLOCKING SCHEDULE

ASSUMPTIONS: LINE PRESSURE – 100 psi, ALLOWABLE BEARING – 4000 psf, SAFETY FACTOR – 3

			11 1/4° BEND			22 1/2° BEND			45° BEND			90° BEND			TEE & PLUG		
PIPE DIAMETER	PIPE AREA Sq. In.	X	THRUST Lbs.	AREA Sq. Ft.	A	THRUST Lbs.	AREA Sq. Ft.	B	THRUST Lbs.	AREA Sq. Ft.	C	THRUST Lbs.	AREA Sq. Ft.	D	THRUST Lbs.	AREA Sq. Ft.	E
4"–12"	120.8	1.5'	2367	1.2	1.1'	4,712	2.4	1.5'	9,243	4.6	2.2'	17,078	8.5	2.9'	12,076	6.0	2.5'

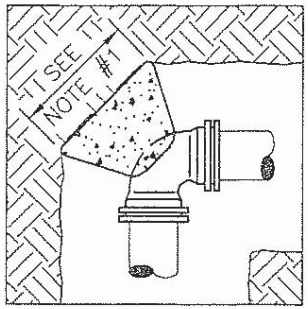

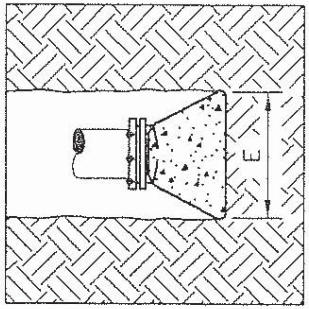

PLAN

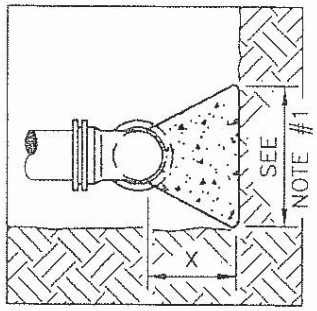

SECTION

NOTES:

1. USE A, B, C, D or E AS APPROPRIATE. REFER TO SCHEDULE.
2. ALL CONCRETE THRUST BLOCKS SHALL BEAR AGAINST UNDISTURBED TRENCH WALLS. DISTANCE (X) FROM PIPE FITTING TO TRENCH WALL SHALL BE AS SHOWN IN THE SCHEDULE OR A MIN. OF 12" AT THE THRUST BLOCK.
3. VERTICAL DIMENSION OF BEARING AREA AGAINST TRENCH WALL OF THRUST BLOCK SHALL BE EQUAL TO HORIZONTAL DIMENSION OF A, B, C, D, OR E AS APPROPRIATE. REFER TO SCHEDULE AND SECTION DRAWING.
4. ALL JOINTS SHALL BE TEMPORARILY JACKED WHEN POURING THRUST BLOCKS. ALL JOINTS OF FITTINGS SHALL BE KEPT FREE OF ANY CONCRETE.
5. ALL CONCRETE THRUST BLOCKS SHALL CONSIST OF A MIXTURE OF 1:2:6 OF CEMENT TO WASHED SAND TO GRAVEL & SHALL BE CURED FOR A MIN. OF 24 HRS.
6. CONCRETE THRUST BLOCKS SHALL APPLY TO ALL PIPE FITTINGS.

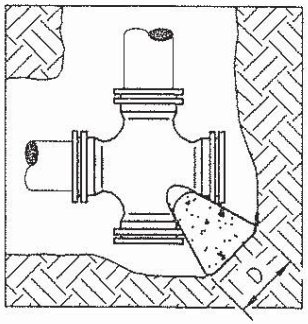

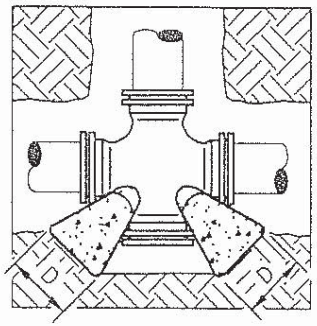

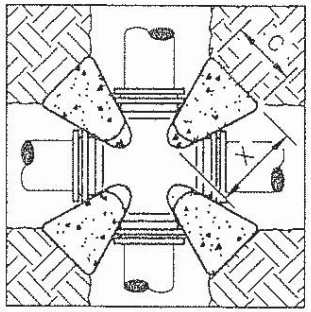

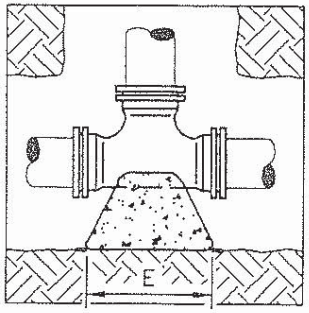

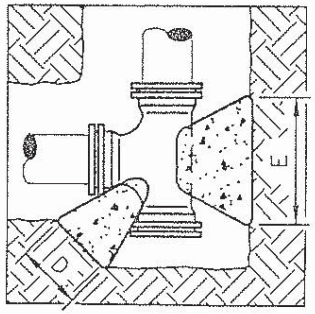

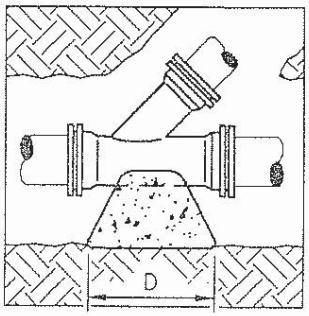

CITY OF LEANDER, TEXAS

THRUST BLOCKING DETAILS

Scale: NTS

Approved: Date

Drawn by: RPW

Detail No. 103–1

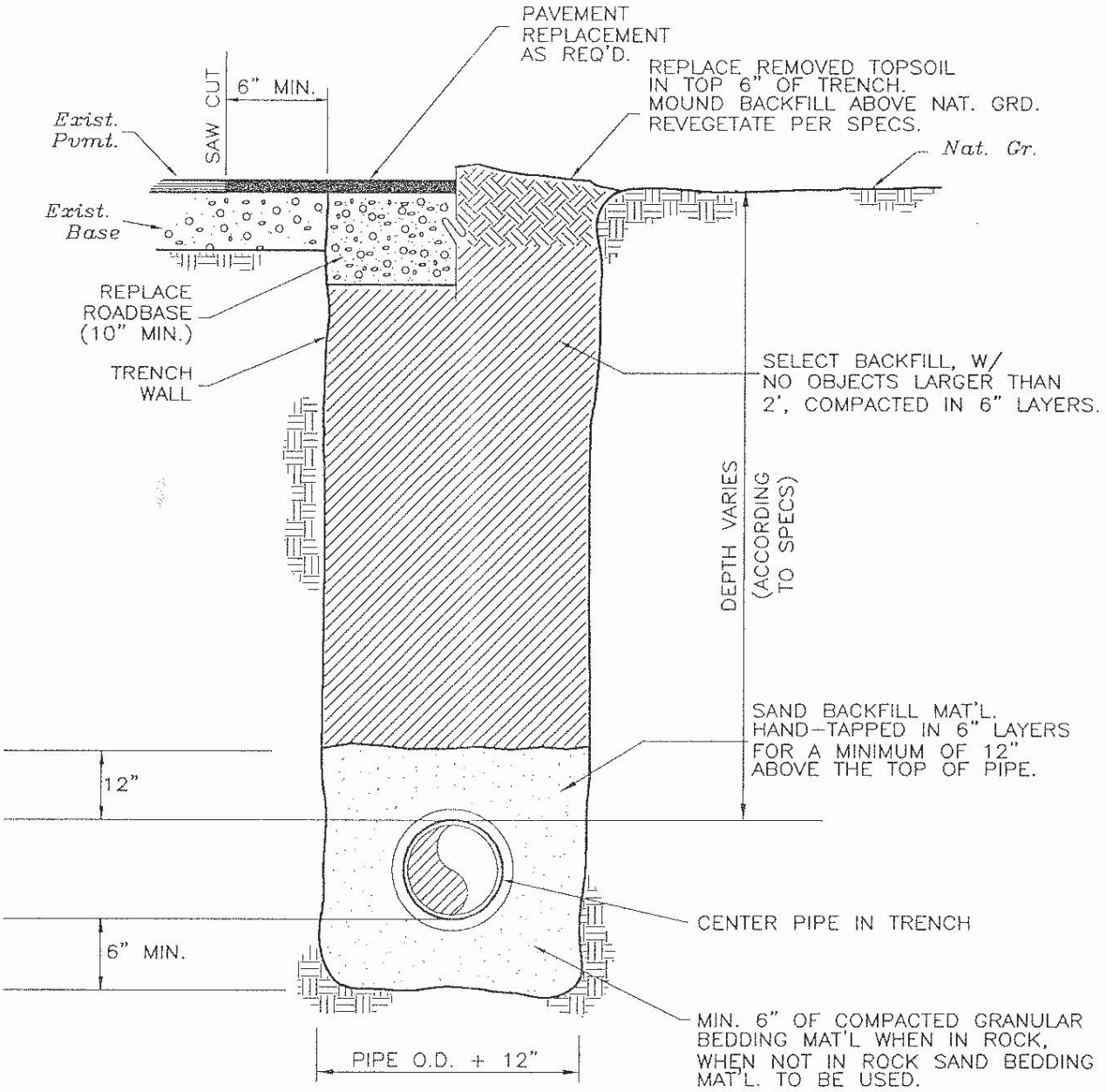

STANDARD BACKFILL

CITY OF LEANDER, TEXAS		
Scale: NTS	Approved 1/20/06 Date	Drawn by: SDK
TYPICAL PIPE TRENCH AND EMBEDMENT		Detail No. 104-1

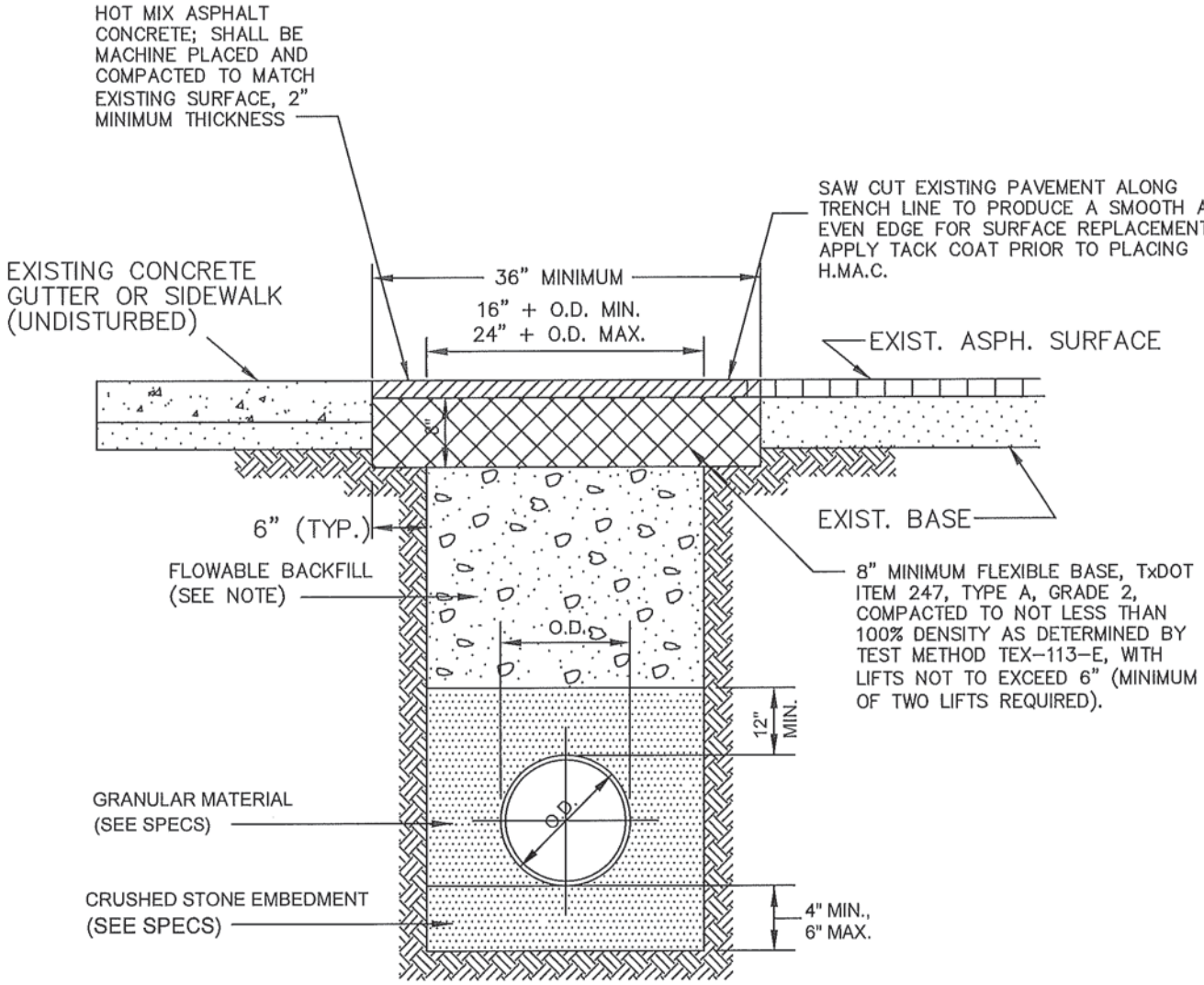

N.T.S.

NOTES:

FLOWABLE BACKFILL SHALL CONSIST OF A MIXTURE OF NATIVE SOILS OR MANUFACTURED MATERIALS, CEMENT AND/OR FLY ASH, AND WATER WHICH PRODUCES A MATERIAL WITH UNCONFINED COMPRESSIVE STRENGTH OF BETWEEN 250 AND 450 PSI AFTER 28 DAYS. ANY MATERIALS USED SHALL BE PRIMARILY GRANULAR, WITH A PLASTICITY INDEX <12 AND WITH 100% PASSING A 3/4 INCH SIEVE. THE FLOWABLE MIXTURE SHALL BE MIXED IN A PUG MILL, CONCRETE MIXER, OR TRANSIT MIXER AND SHALL HAVE A MINIMUM SLUMP OF 5 INCHES. THE FLOWABLE MIXTURE MUST BE ALLOWED TO SET PRIOR TO THE PACEMENT OF ANY OVERLAYING MATERIAL.

ONE CONCRETE CYLINDER WILL BE REQUIRED FOR TESTING AND WILL BE FABRICATED BY THE CITY INSPECTOR.

THE PUBLIC WORKS DEPARTMENT IS TO BE CONTACTED AT 259-2640 PRIOR TO COMMENCEMENT OF BACKFILL OPERATIONS.

STATE OF TEXAS
WAYNE S. WATTS
86134
LICENSED
PROFESSIONAL ENGINEER

07/20/12

City Of Leander, Texas

DETAIL #104-2

TYPICAL TRENCH AND H.M.A.C. SURFACE REMOVAL AND REPLACEMENT DETAIL

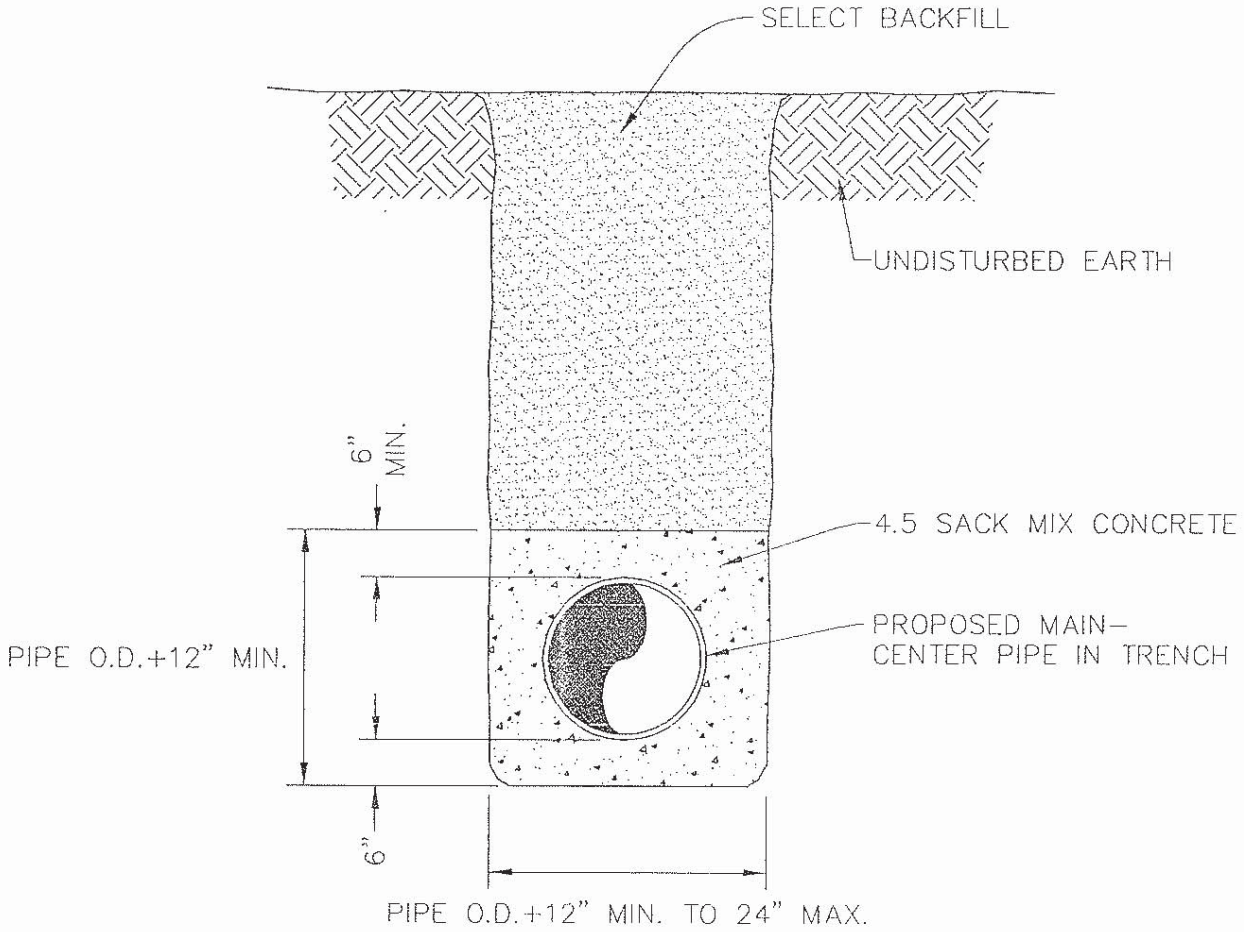

CITY OF LEANDER, TEXAS		
Scale: NTS	Approved 11/22/96 Date	Drawn by: RPW
CONCRETE ENCASEMENT		Detail No. 105–1

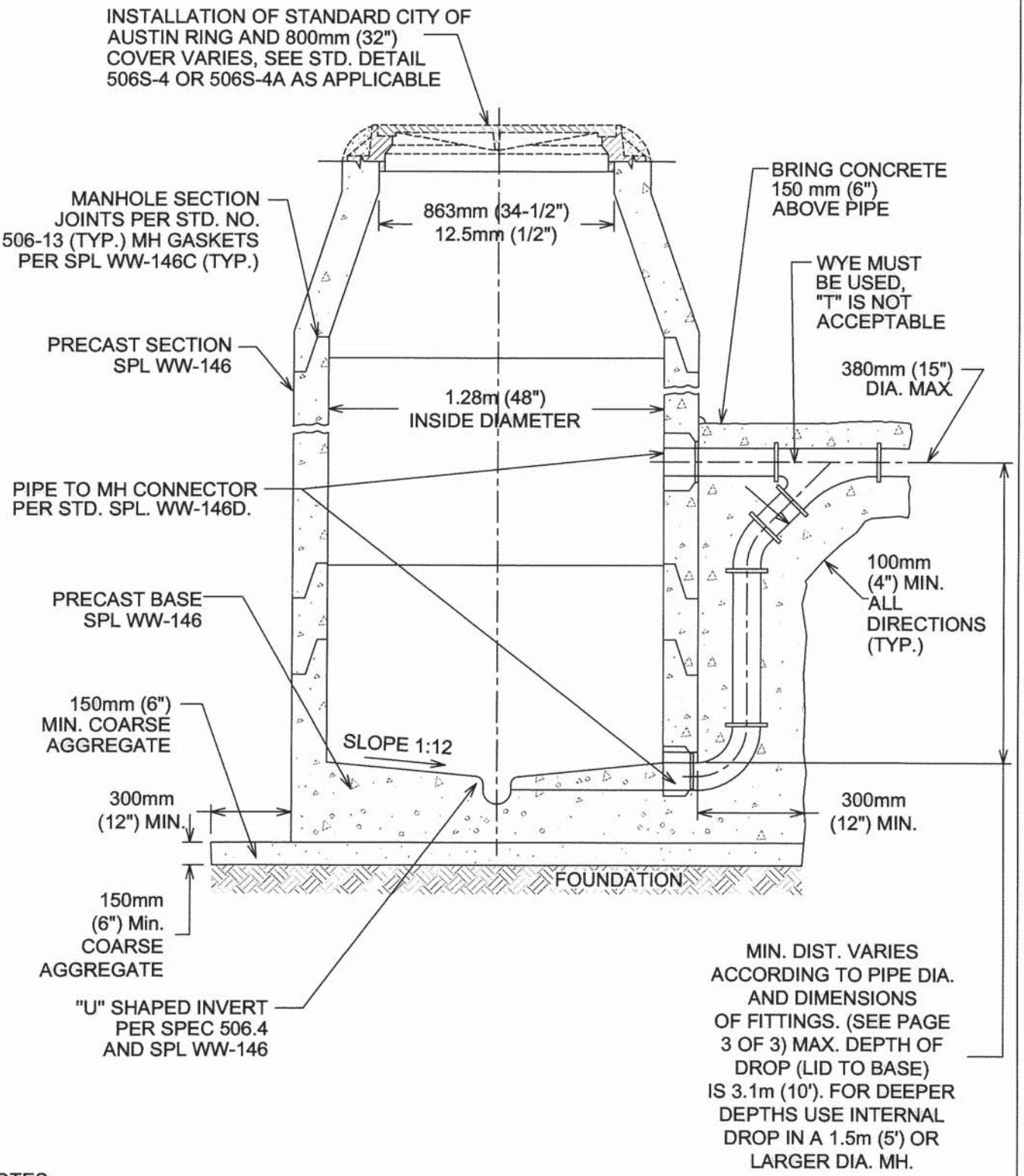

NOTES:

1. THE MANHOLE BASE SHALL BE BEDDED ON 150mm (6") COARSE AGGREGATE. THE CONTRACTOR SHALL LEVEL AND PLUMB THE BASE PRIOR TO SETTING THE PRECAST MANHOLE RISER SECTIONS ON THE PRECAST CONCRETE BASE.
2. MANHOLE FOUNDATION SHALL MEET OR EXCEED STD. SPEC 506.5B.

CITY OF AUSTIN AUSTIN WATER UTILITY	PRECAST MANHOLE WITH DROP INLET ON PRECAST BASE	
Kathi L Flowers 8/31/2011	THE ARCHITECT/ENGINEER ASSUMES RESPONSIBILITY FOR APPROPRIATE USE OF THIS STANDARD.	STANDARD NO. 506S-8 1 OF 3

INVERT DETAIL

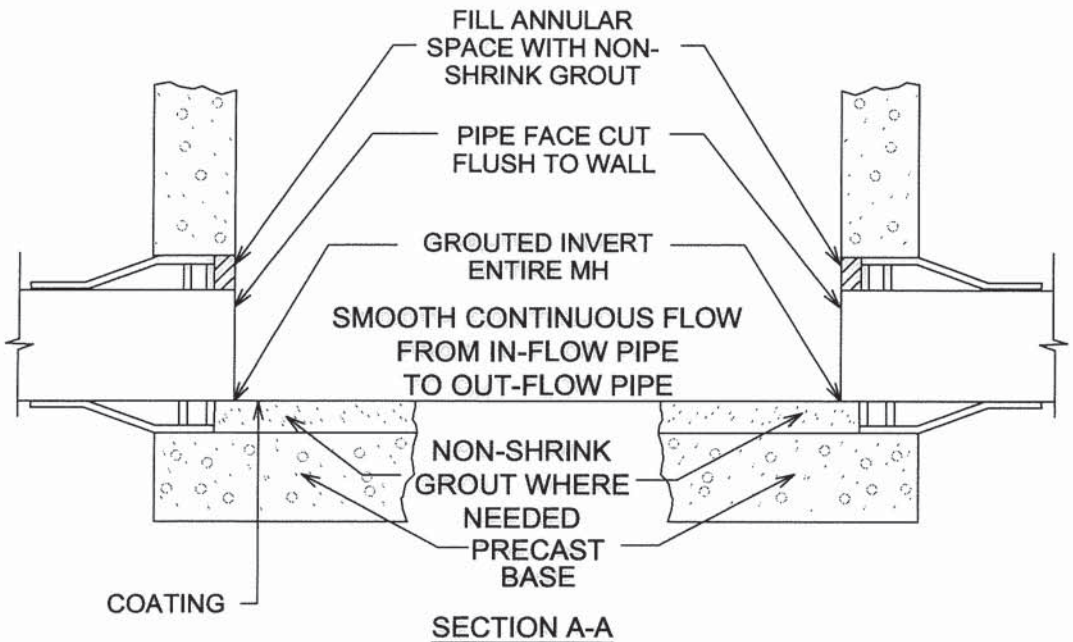

SECTION A-A

INVERT PLAN VIEW

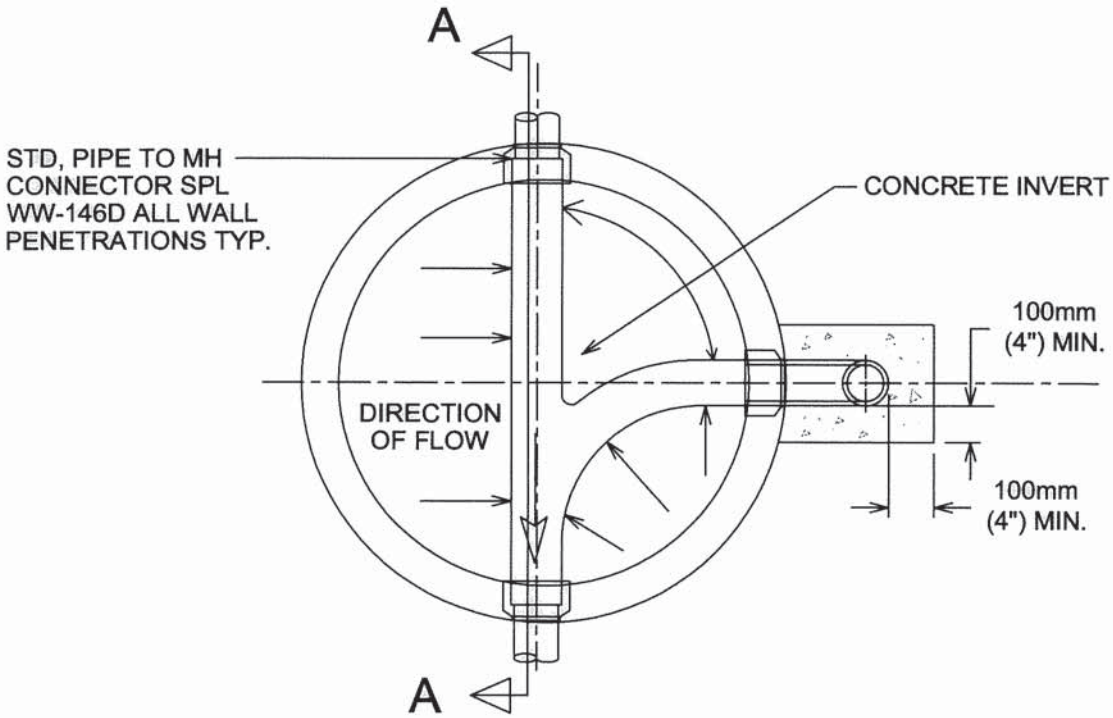

CITY OF AUSTIN AUSTIN WATER UTILITY	PRECAST MANHOLE WITH DROP INLET ON PRECAST BASE	
Kathi L Flowers 8/31/2011	THE ARCHITECT/ENGINEER ASSUMES RESPONSIBILITY FOR APPROPRIATE USE OF THIS STANDARD.	STANDARD NO. 506S-8 2 OF 3

STANDARD DROP CONNECTIONS
MINIMUM DIMENSIONS
(FOR INFORMATION ONLY)

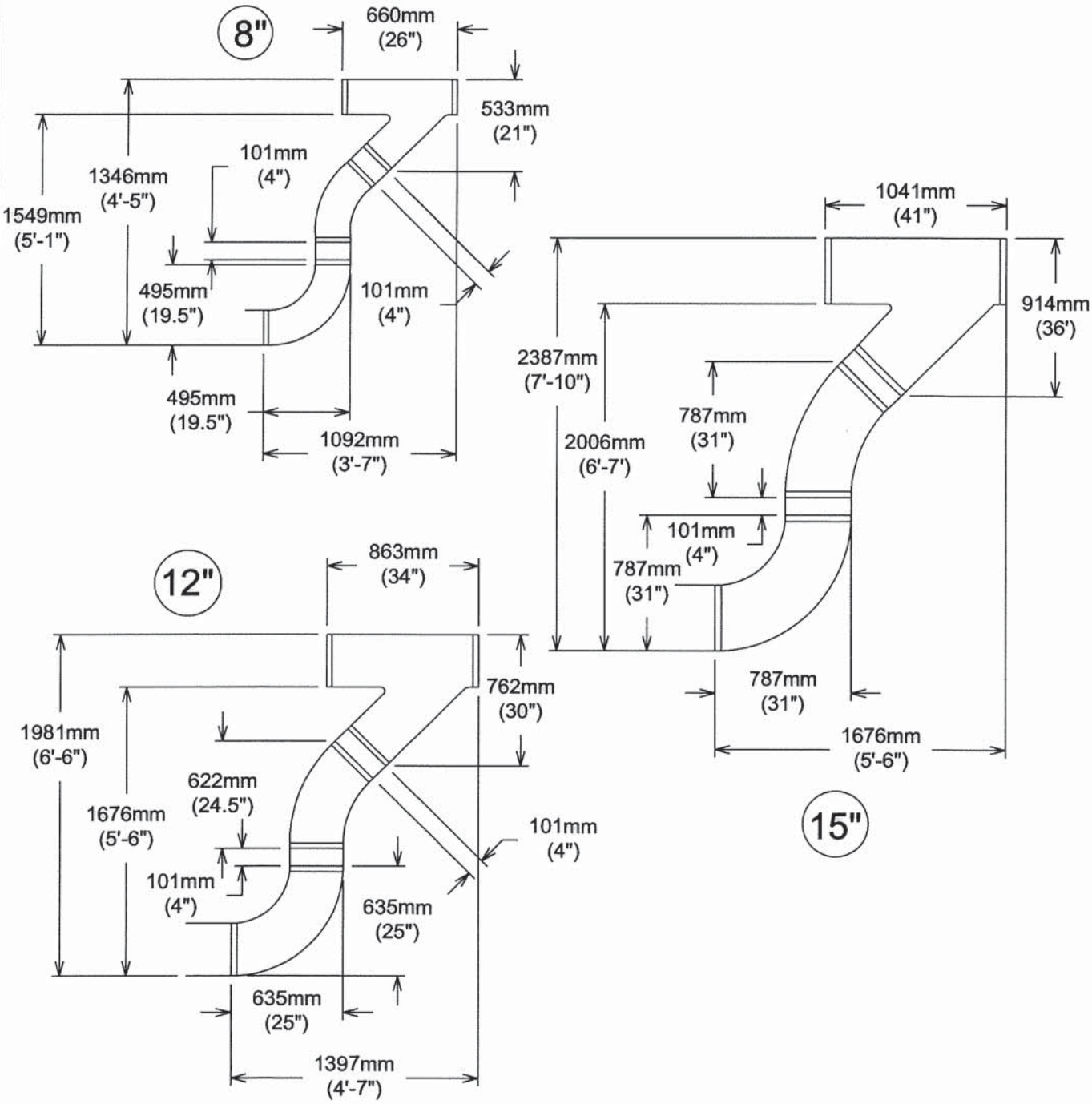

CITY OF AUSTIN AUSTIN WATER UTILITY	PRECAST MANHOLE WITH DROP INLET ON PRECAST BASE	
Kathi R Flowers 8/31/2011	THE ARCHITECT/ENGINEER ASSUMES RESPONSIBILITY FOR APPROPRIATE USE OF THIS STANDARD.	STANDARD NO. 506S-8 3 OF 3

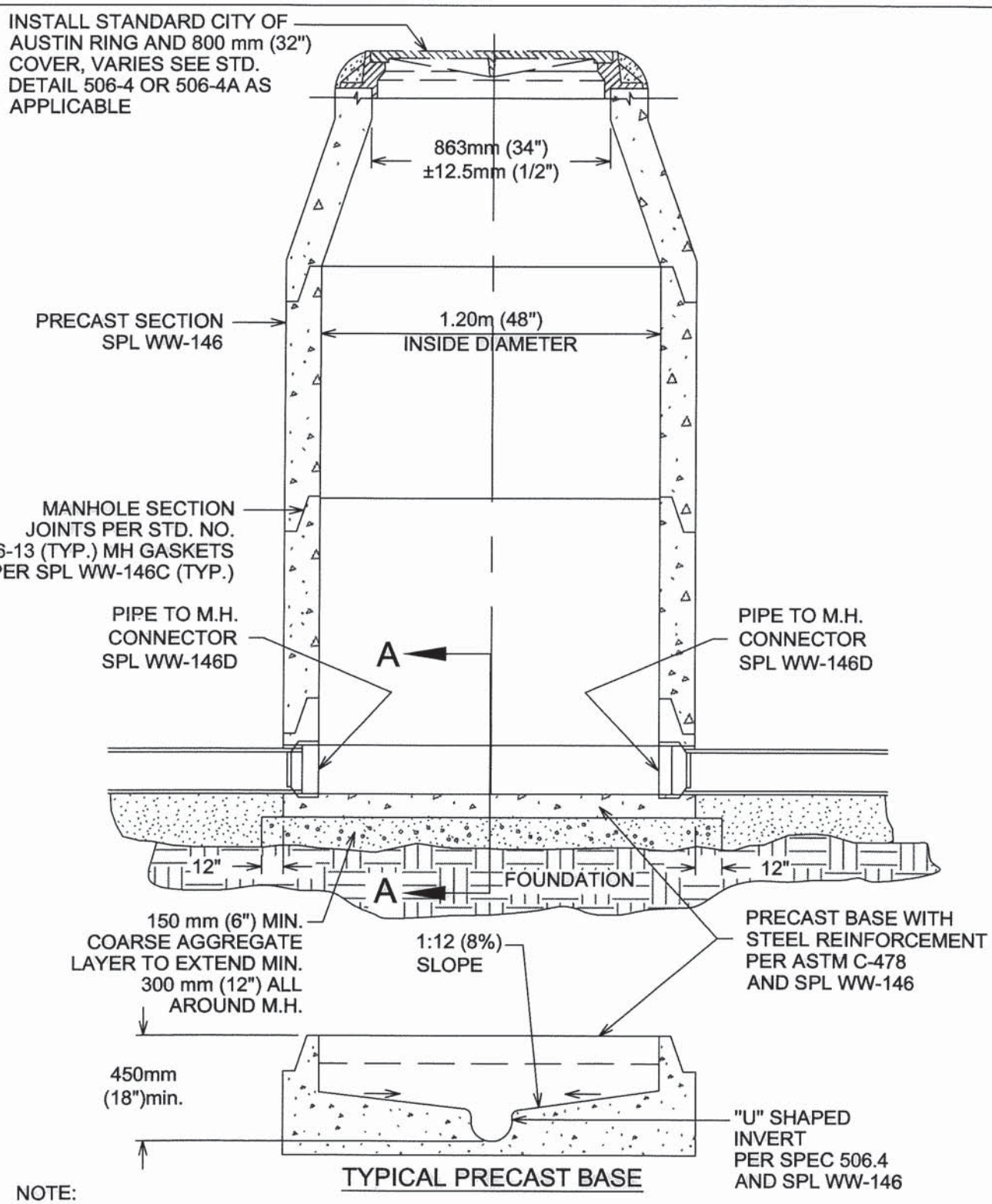

TYPICAL PRECAST BASE

NOTE:

1. THE MANHOLE BASE SHALL BE BEDDED ON 150 mm (6") COARSE AGGREGATE. THE CONTRACTOR SHALL LEVEL AND PLUMB THE BASE PRIOR TO SETTING THE PRECAST MANHOLE RISER SECTIONS ON THE PRECAST CONCRETE BASE.
2. MH FOUNDATION SHALL MEET OR EXCEED STD. SPEC. 506.5B.

CITY OF AUSTIN AUSTIN WATER UTILITY	WASTEWATER MANHOLE ON PRECAST BASE	
Kathi L Flowers 8/31/2011	THE ARCHITECT/ENGINEER ASSUMES RESPONSIBILITY FOR APPROPRIATE USE OF THIS STANDARD	STANDARD NO. 506S-10

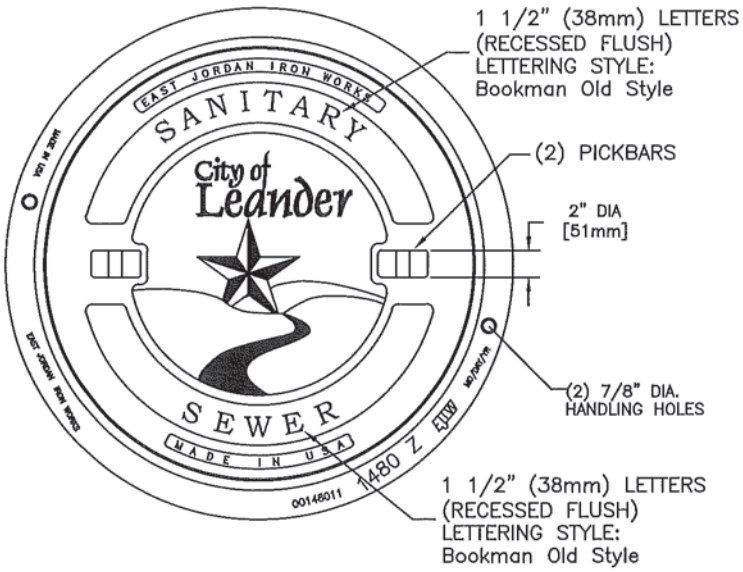

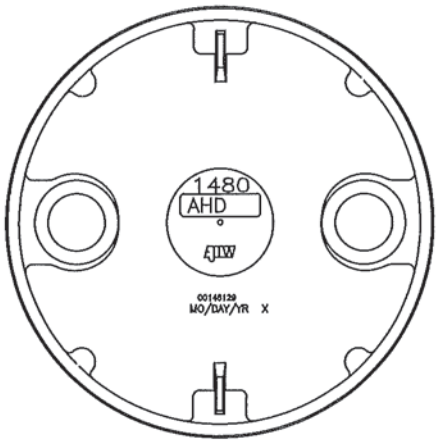

BOTTOM VIEW OF COVER

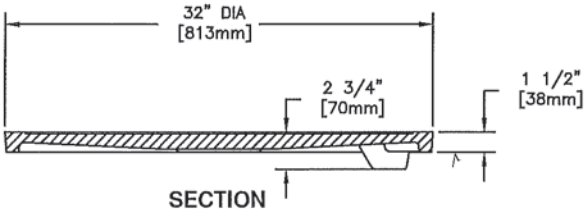

SECTION

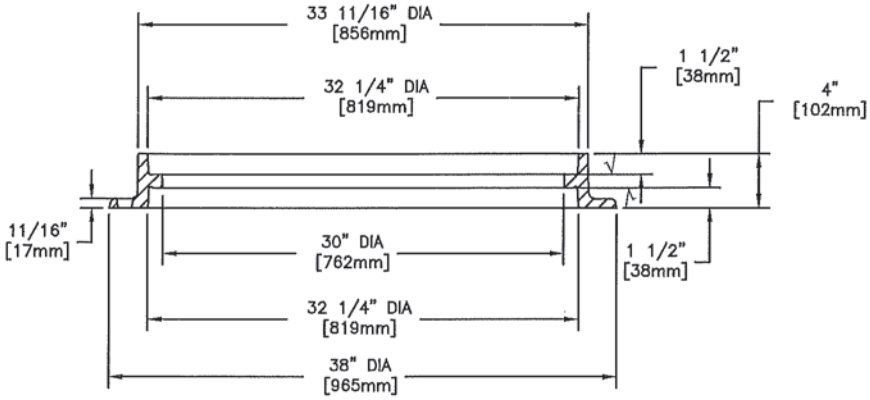

SECTION

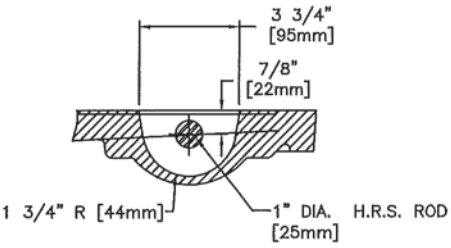

PICKBAR DETAIL

√ MACHINED SURFACE

MANHOLE ASSEMBLY	EST. WT. COVER: 200 LBS 91kg FRAME: 155 LBS 70kg UNIT: 355 LBS 161kg
EAST JORDAN IRON WORKS PRODUCT NO. 00148107 OR APPROVED EQUAL	OPEN AREA N/A
	MAT'L SPEC. COVER – GRAY IRON ASTM A48 CL35B FRAME – GRAY IRON ASTM A48 CL35B

LOAD RATING

HEAVY DUTY (H20)

STATE OF TEXAS
WAYNE S. WATTS
86134
LICENSED
PROFESSIONAL ENGINEER

Wayne S. Watts
02/04/14

City Of Leander, Texas

DETAIL #107-1

SANITARY SEWER MANHOLE COVER

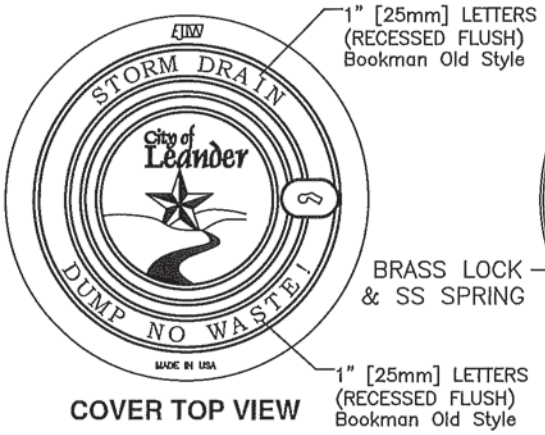

COVER TOP VIEW

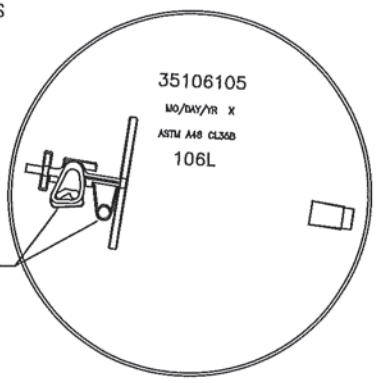

BOTTOM VIEW OF COVER

RING & COVER TOP VIEW

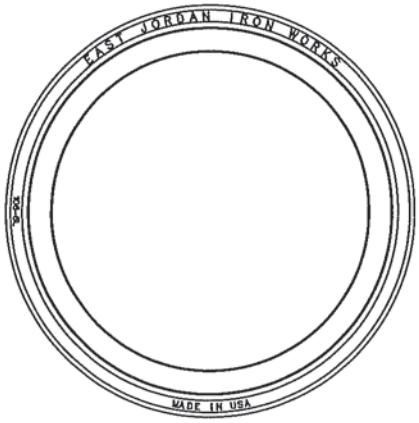

RING TOP VIEW

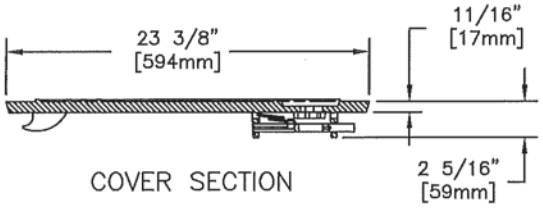

COVER SECTION

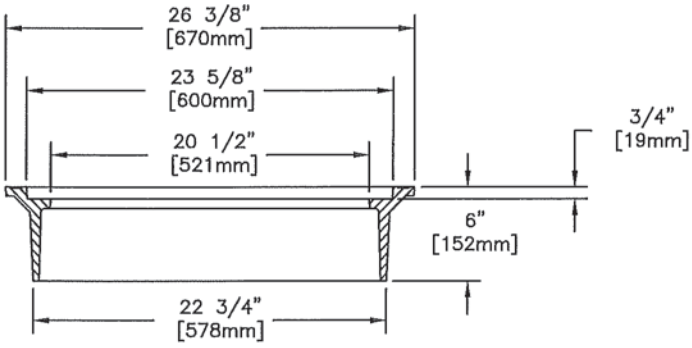

FRAME SECTION

RING & COVER SECTION

MANHOLE ASSEMBLY WITH LOCK	EST. WT. COVER: 86 LBS 39kg RING: 95 LBS 43kg TOTAL: 181 LBS 82kg
EAST JORDAN IRON WORKS PRODUCT NO. 35505205 OR APPROVED EQUAL	OPEN AREA N/A
	MAT'L SPEC. COVER – GRAY IRON ASTM A48 CL35B FRAME – GRAY IRON ASTM A48 CL35B

LOAD RATING

NON-TRAFFIC

STATE OF TEXAS
WAYNE S. WATTS
86134
LICENSED
PROFESSIONAL ENGINEER

Wayne S. Watts
02/04/14

City Of Leander, Texas

DETAIL #107-2

STORM SEWER INLET COVER
(LOCKING)

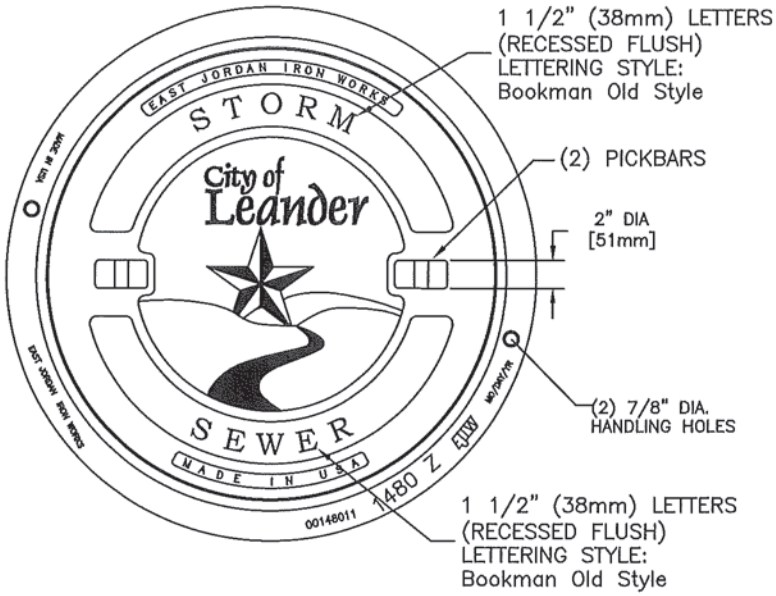

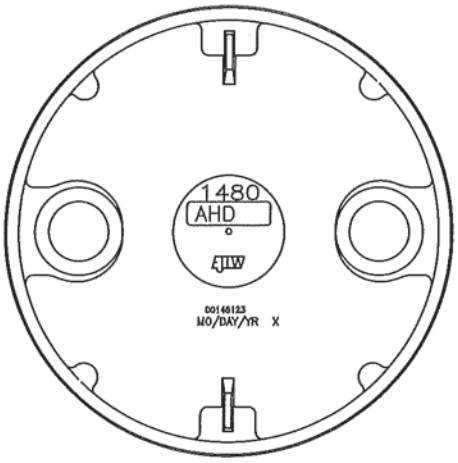

BOTTOM VIEW OF COVER

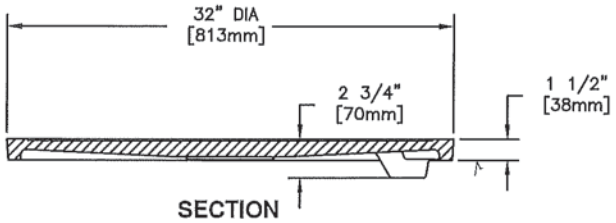

SECTION

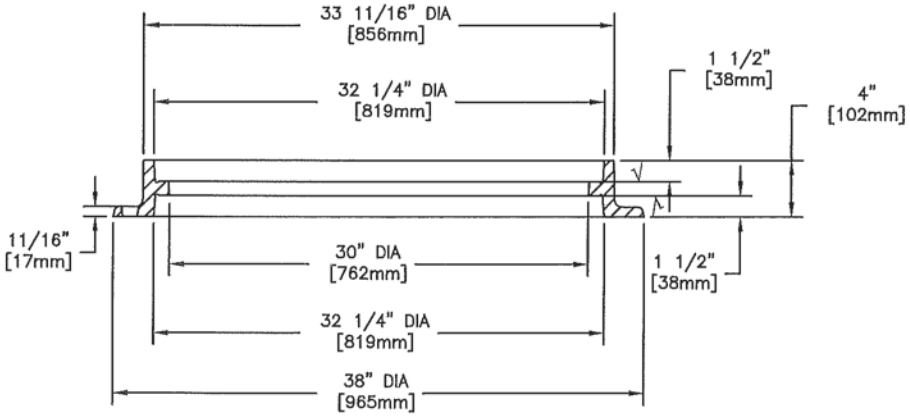

SECTION

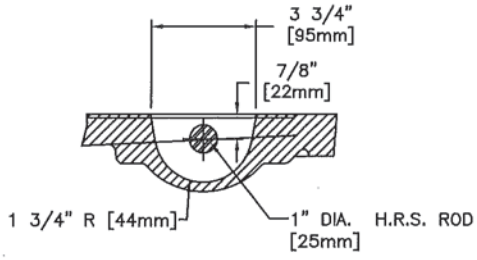

PICKBAR DETAIL

√ MACHINED SURFACE

MANHOLE ASSEMBLY	EST. WT. COVER: 200 LBS 91kg FRAME: 155 LBS 70kg UNIT: 355 LBS 161kg
EAST JORDAN IRON WORKS PRODUCT NO. 00148105 OR APPROVED EQUAL	OPEN AREA N/A
	MAT'L SPEC. COVER – GRAY IRON ASTM A48 CL35B FRAME – GRAY IRON ASTM A48 CL35B

LOAD RATING

HEAVY DUTY (H20)

STATE OF TEXAS
WAYNE S. WATTS
86134
LICENSED PROFESSIONAL ENGINEER

Wayne S. Watts
02/04/14

City Of Leander, Texas

DETAIL #107-3

STORM SEWER MANHOLE COVER
(HEAVY DUTY)

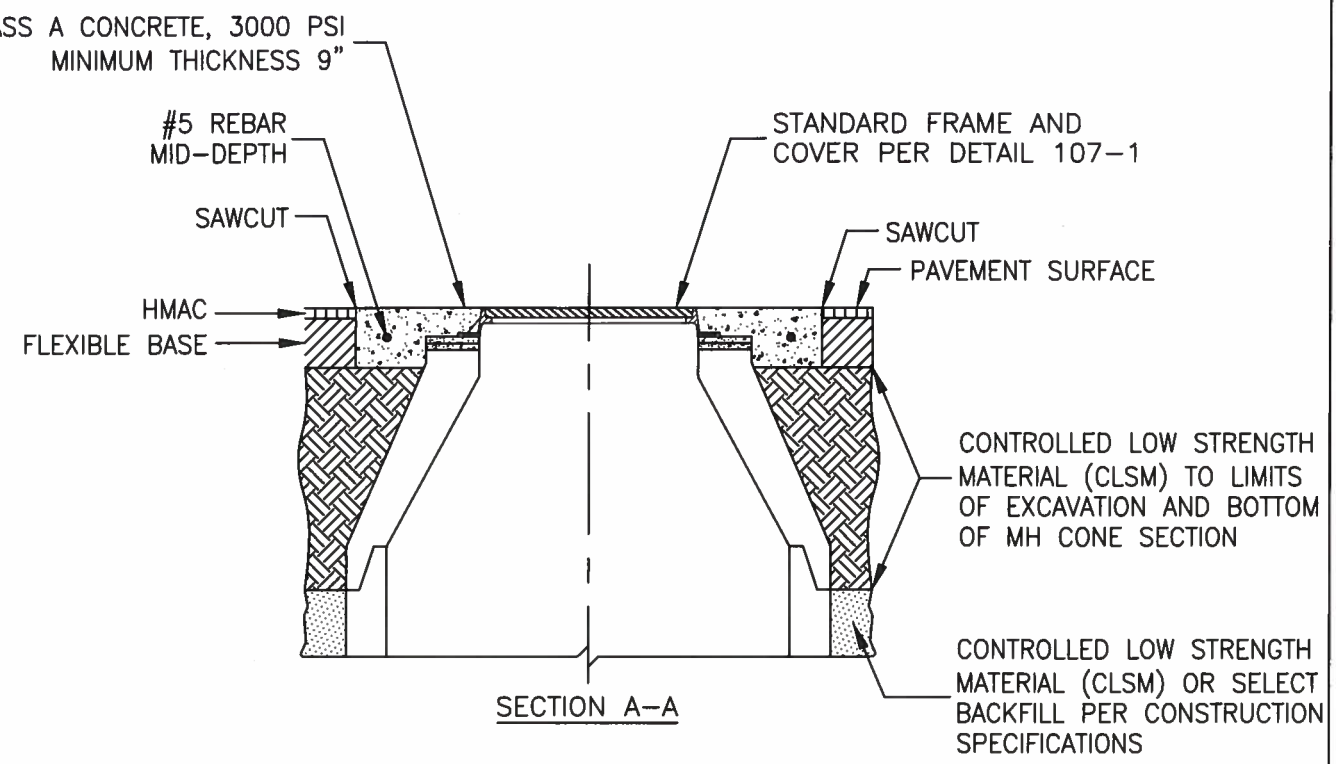

SECTION A–A

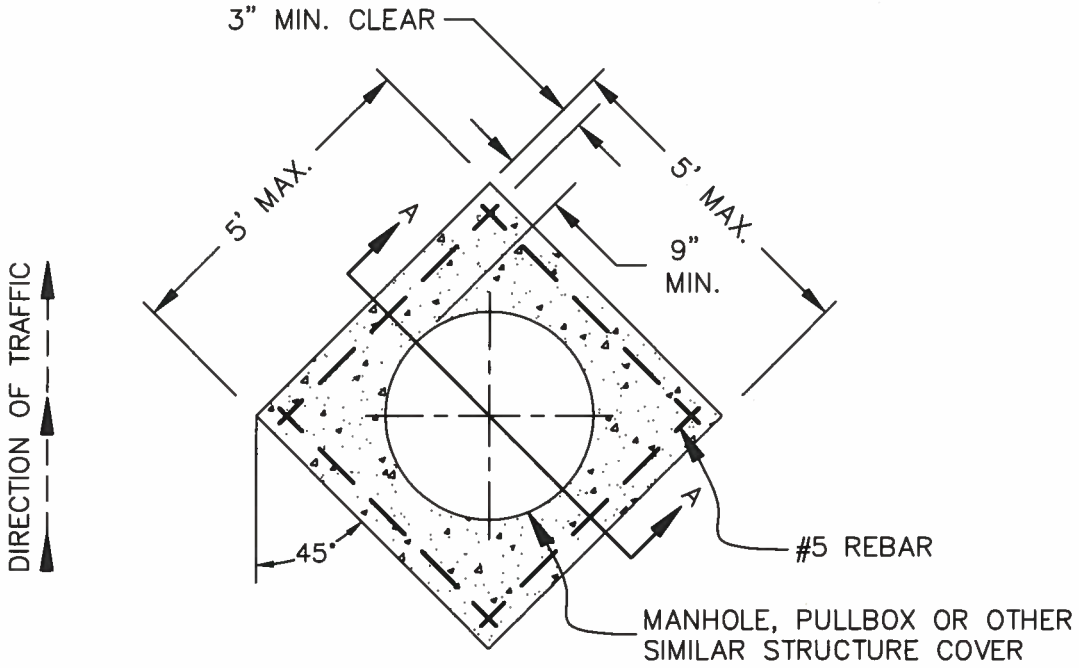

PLAN VIEW

NOTES:

1. CONCRETE SHALL BE CLASS A, 3000 PSI MINIMUM AND SHALL BE REINFORCED WITH #5 BARS AS SHOWN. THE CONCRETE SHALL EXTEND TO SAW CUT PAVEMENT EDGE.
2. PLACEMENT OF CLSM SHALL BE BELOW FLEXIBLE BASE LAYER TO LIMITS OF EXCAVATION.
3. INSTALLATION OF HMAC OVER CONCRETE ADJUSTMENT SHALL NOT BE ALLOWED.
4. INSTALLATION OF CONCRETE CASTING ADJUSTMENT IS REQUIRED FOR ALL TYPES OF MANHOLES TO BE LOCATED IN THE ROADWAY.

STATE OF TEXAS
WAYNE S. WATTS
86134
LICENSED
PROFESSIONAL ENGINEER

Wayne S. Watts
11/05/15

City Of Leander, Texas

DETAIL #107-4
MANHOLE CASTING ADJUSTMENT

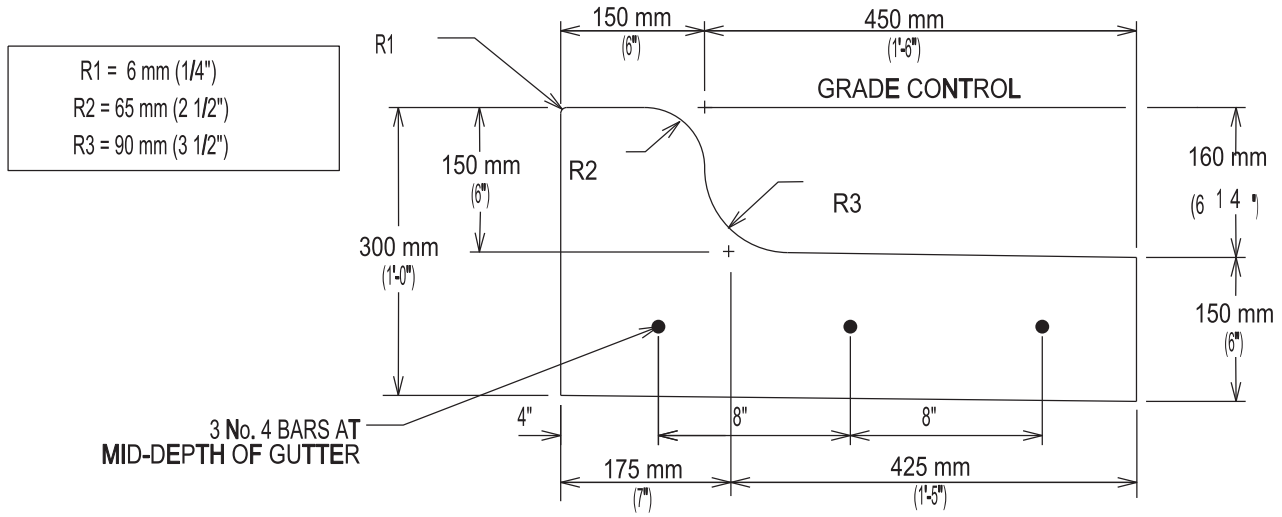

SPILL

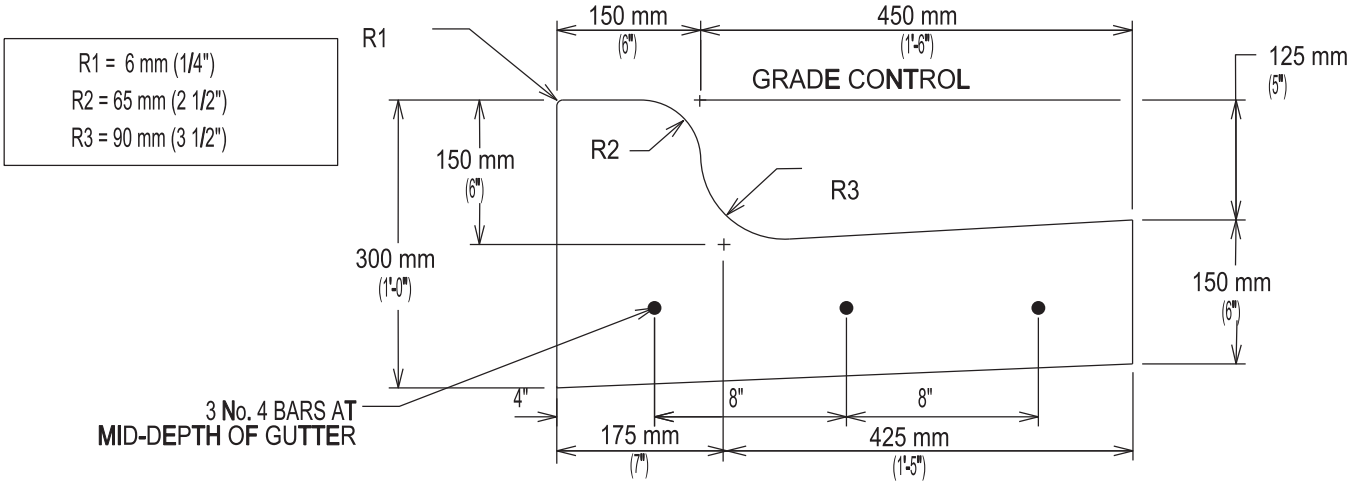

CATCH

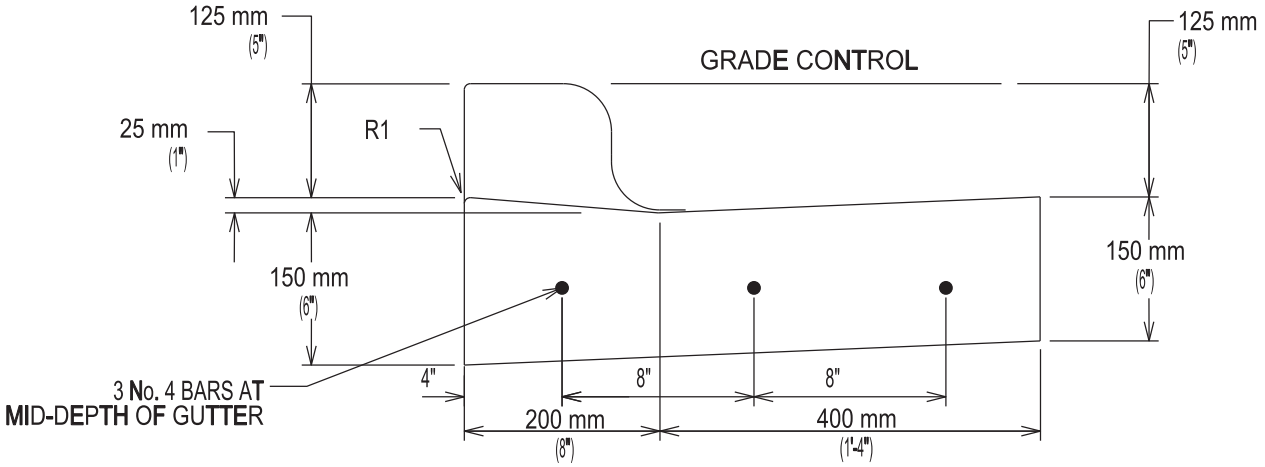

LAYDOWN CURB

CITY OF AUSTIN DEPARTMENT OF PUBLIC WORKS		REINFORCED CURB AND GUTTER SECTION	
RECORD COPY SIGNED BY SAM ANGOORI	*01/04/10* ADOPTED	THE ARCHITECT/ENGINEER ASSUMES RESPONSIBILITY FOR APPROPRIATE USE OF THIS STANDARD.	STANDARD NO. 430S-2

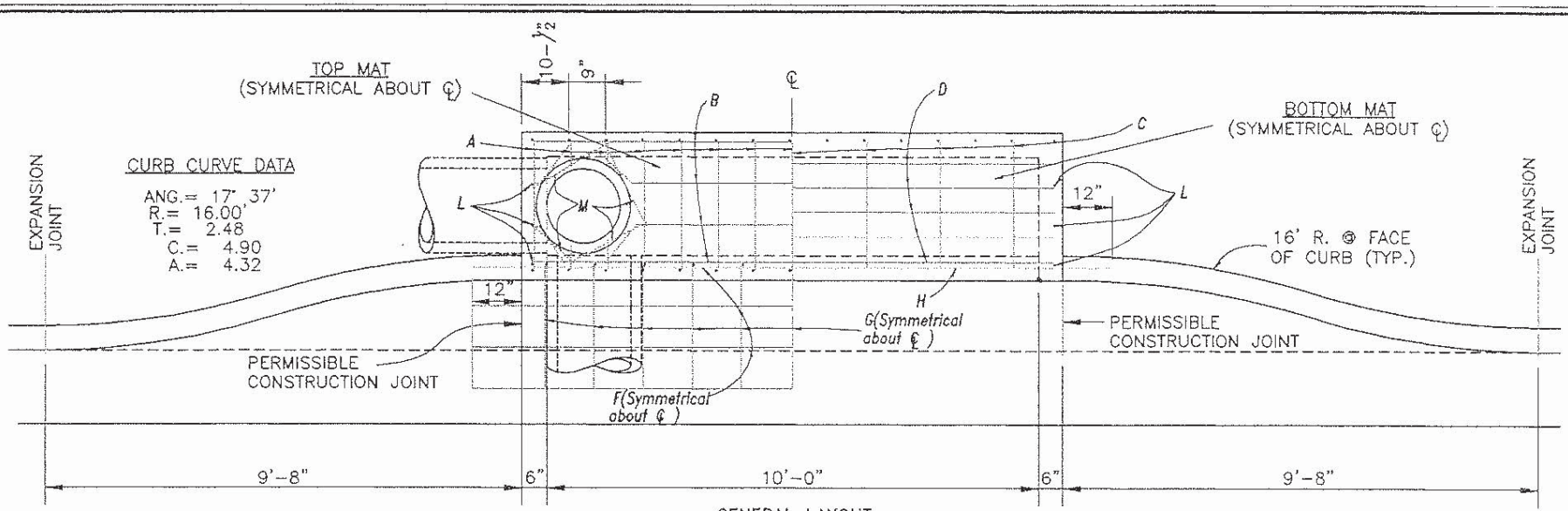

GENERAL LAYOUT
NO SCALE

TABLE OF QUANTITIES
FOR 18" OUTLET PIPE

REINFORCING STEEL QUANTITIES					
BARS	NUMBER	SIZE	SPACING	LENGTH	WEIGHT
A	15	4	9"*	7'-0"	73
B	4	4	10"	10'-8"	29
C	7	4	18"	2'-6"	12
D	5	6	6"	10'-8"	80
E	6	4	12"	2'-6"	10
F	3	4	10"	13'-0"	35
G	11	4	12"	4'-3"	31
H	1	6	--	13'-0"	20
J	7	4	12"	10'-8"	50
K	30	4	9"*	2'-7½"	52
L	6	4	12"*	4'-4"	17
M	4	4	--	1'-8" avg	4
TOTAL STEEL, LB.					413
TOTAL CONCRETE, CY.					4.06

*EXCEPT AS SHOWN ON PLANS

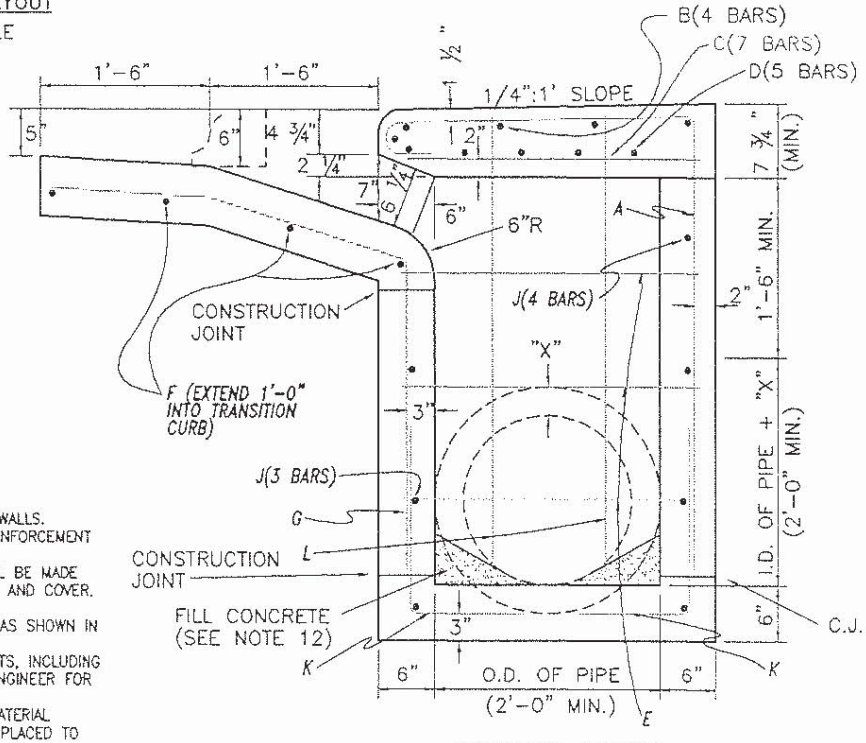

ELEVATION-SECTION
NO SCALE

INLET GENERAL NOTES

1. ALL CONCRETE SHALL BE 5 SACK MIX.
2. ALL REINFORCING STEEL SHALL BE GRADE 40.
3. DIMENSIONS RELATING TO REINFORCING STEEL ARE TO CENTERS OF BARS.
4. VERTICAL STEEL MAY BE SPLICED (15" MIN. LAP) IN THE LOWER ONE-HALF OF ALL INLET WALLS.
5. IN AREAS OF CONFLICT BETWEEN REINFORCING STEEL, PIPES AND MANHOLE FRAME THE REINFORCEMENT SHALL BE BENT OR ADJUSTED TO CLEAR AS DIRECTED BY THE ENGINEER.
6. QUANTITIES SHOWN HEREON ARE FOR THE CONTRACTOR'S INFORMATION ONLY. PAYMENT WILL BE MADE FOR EACH INLET OF THE TYPE SPECIFIED, COMPLETE IN PLACE INCLUDING MANHOLE FRAME AND COVER.
7. CHAMFER ALL EXPOSED EDGES 3/4"
8. MANHOLE FRAME AND COVERS SHALL BE FURNISHED WITH THE CAST-ON EYES AND CHAIN AS SHOWN IN THE CAST-ON EYE AND COVER CHAIN DETAILS.
9. THE CONTRACTOR MAY PROPOSE ALTERNATE PROCEDURES FOR THE CONSTRUCTION OF INLETS, INCLUDING PRECAST UNITS. PLANS FOR SUCH PROPOSED ALTERNATES SHALL BE SUBMITTED TO THE ENGINEER FOR REVIEW AND APPROVAL BEFORE CONSTRUCTION.
10. ALL INLET WALLS SHALL BE FORMED EXCEPT WHERE THE NATURE OF THE SURROUNDING MATERIAL IS SUCH THAT IT CAN BE TRIMMED TO A SMOOTH VERTICAL FACE. WHEN INLET WALLS ARE PLACED TO NEAT EXCAVATION LINES THE WALL THICKNESS SHALL NOT EXCEED 10 INCHES.
11. PAYMENT FOR INLETS AT THE CONTRACT PRICE SHALL INCLUDE THE TRANSITION CURB.
12. INVERT OF INLET SHALL BE SLOPED 1:20 WITH FILL CONCRETE.

CITY OF LEANDER, TEXAS

RECESSED INLET DETAIL

Scale: NTS

Approved: 11/23/06 Date

Drawn by: RPW

Detail No. 201-1

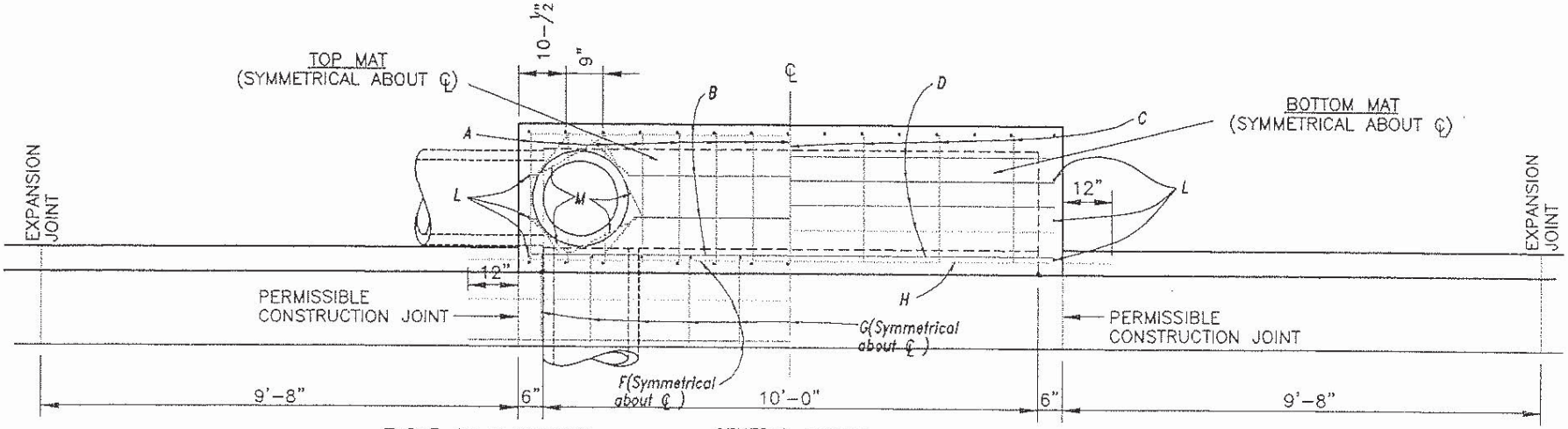

GENERAL LAYOUT
NO SCALE

TABLE OF QUANTITIES
FOR 18" OUTLET PIPE

REINFORCING STEEL QUANTITIES					
BARS	NUMBER	SIZE	SPACING	LENGTH	WEIGHT
A	15	4	9"*	7'-0"	73
B	4	4	10"	10'-8"	29
C	7	4	18"	2'-6"	12
D	5	6	6"	10'-8"	80
E	6	4	12"	2'-6"	10
F	3	4	10"	13'-0"	35
G	11	4	12"	4'-3"	31
H	1	6	--	13'-0"	20
J	7	4	12"	10'-8"	50
K	30	4	9"*	2'-7½"	52
L	6	4	12"*	4'-4"	17
M	4	4	--	1'-8" avg.	4
TOTAL STEEL, LB.					413
TOTAL CONCRETE, CY.					4.06

*EXCEPT AS SHOWN ON PLANS

INLET GENERAL NOTES

1. ALL CONCRETE SHALL BE 5 SACK MIX.
2. ALL REINFORCING STEEL SHALL BE GRADE 40.
3. DIMENSIONS RELATING TO REINFORCING STEEL ARE TO CENTERS OF BARS.
4. VERTICAL STEEL MAY BE SPLICED (15" MIN. LAP) IN THE LOWER ONE-HALF OF ALL INLET WALLS.
5. IN AREAS OF CONFLICT BETWEEN REINFORCING STEEL, PIPES AND MANHOLE FRAME THE REINFORCEMENT SHALL BE BENT OR ADJUSTED TO CLEAR AS DIRECTED BY THE ENGINEER.
6. QUANTITIES SHOWN HEREON ARE FOR THE CONTRACTOR'S INFORMATION ONLY. PAYMENT WILL BE MADE FOR EACH INLET OF THE TYPE SPECIFIED, COMPLETE IN PLACE INCLUDING MANHOLE FRAME AND COVER.
7. CHAMFER ALL EXPOSED EDGES 3/4"
8. MANHOLE FRAME AND COVERS SHALL BE FURNISHED WITH THE CAST-ON EYES AND CHAIN AS SHOWN IN THE CAST-ON EYE AND COVER CHAIN DETAILS.
9. THE CONTRACTOR MAY PROPOSE ALTERNATE PROCEDURES FOR THE CONSTRUCTION OF INLETS, INCLUDING PRECAST UNITS. PLANS FOR SUCH PROPOSED ALTERNATES SHALL BE SUBMITTED TO THE ENGINEER FOR REVIEW AND APPROVAL BEFORE CONSTRUCTION.
10. ALL INLET WALLS SHALL BE FORMED EXCEPT WHERE THE NATURE OF THE SURROUNDING MATERIAL IS SUCH THAT IT CAN BE TRIMMED TO A SMOOTH VERTICAL FACE. WHEN INLET WALLS ARE PLACED TO NEAT EXCAVATION LINES THE WALL THICKNESS SHALL NOT EXCEED 10 INCHES.
11. PAYMENT FOR INLETS AT THE CONTRACT PRICE SHALL INCLUDE THE TRANSITION CURB.
12. INVERT OF INLET SHALL BE SLOPED 1:20 WITH FILL CONCRETE.

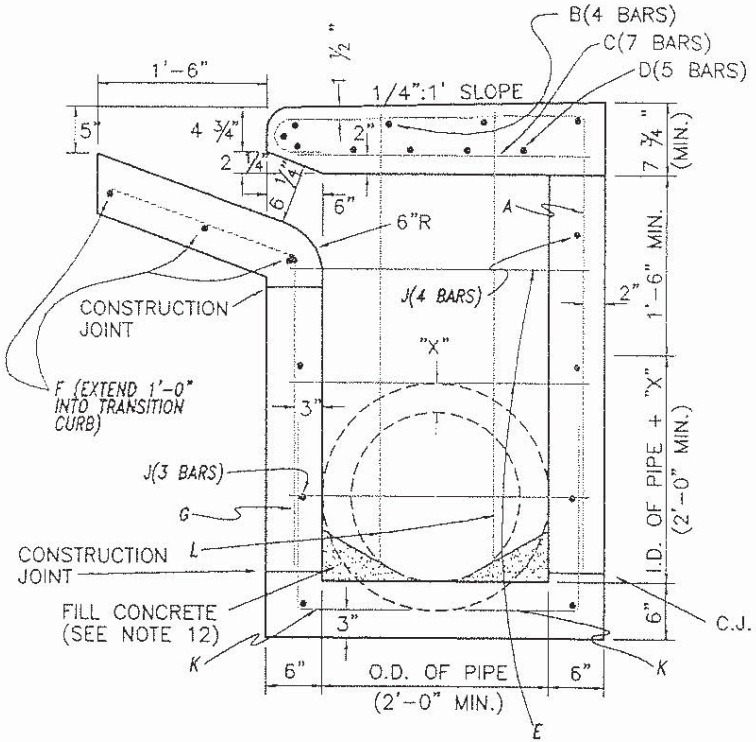

ELEVATION-SECTION
NO SCALE

CITY OF LEANDER, TEXAS

Scale: NTS

Approved

11/22/96
Date

Drawn by: RPW

STD. 10' CURB
INLET DETAIL

Detail No. 201-2

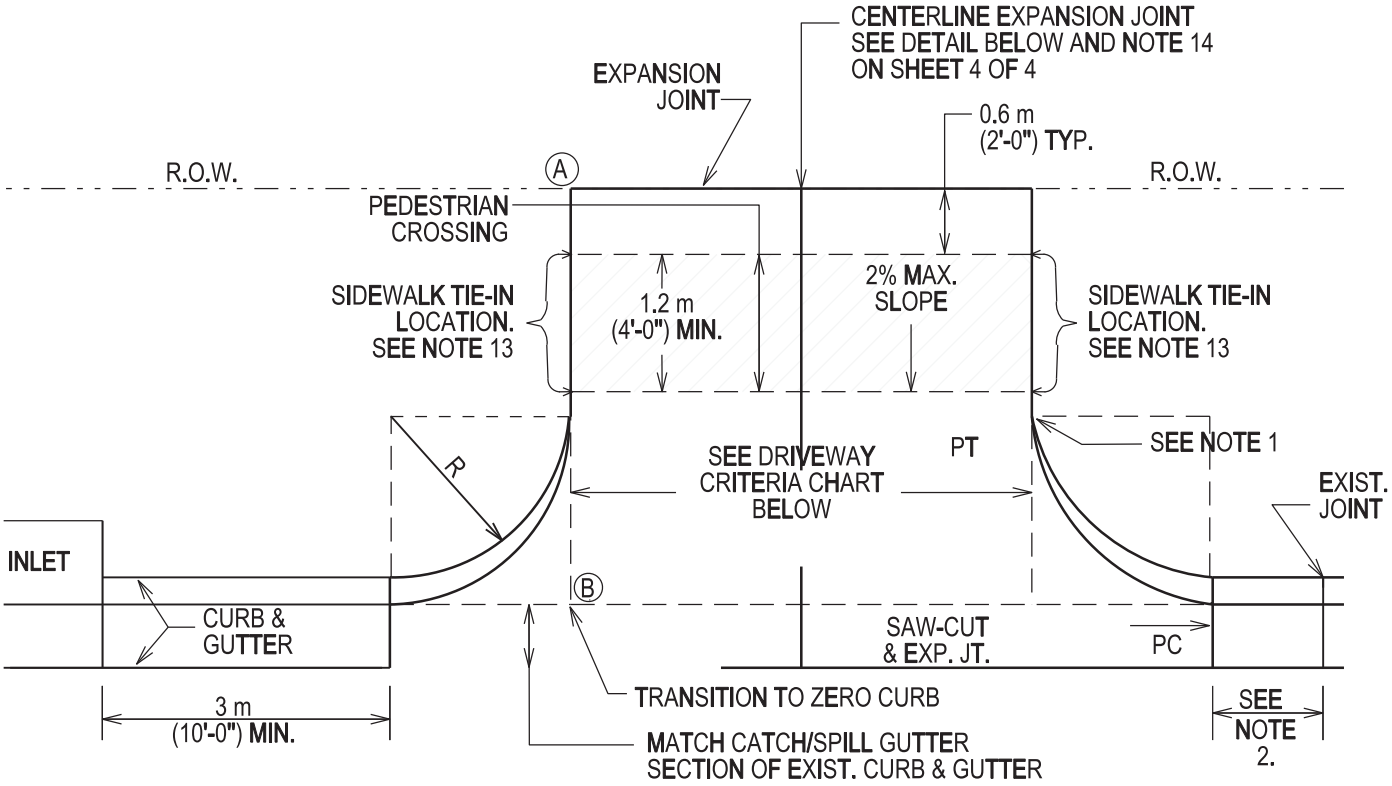

PLAN

NOTE: ALL DRIVEWAYS SHALL BE SLOPED TOWARDS THE STREET FROM THE R.O.W. LINE. ELEVATION OF POINT Ⓐ ABOVE POINT Ⓑ IS, TYPICALLY A MINIMUM OF 150 mm (6") PLUS 20 mm/m ($\frac{1}{4}$" RISE/FOOT) OVER DISTANCE "X" IN METERS (FEET).

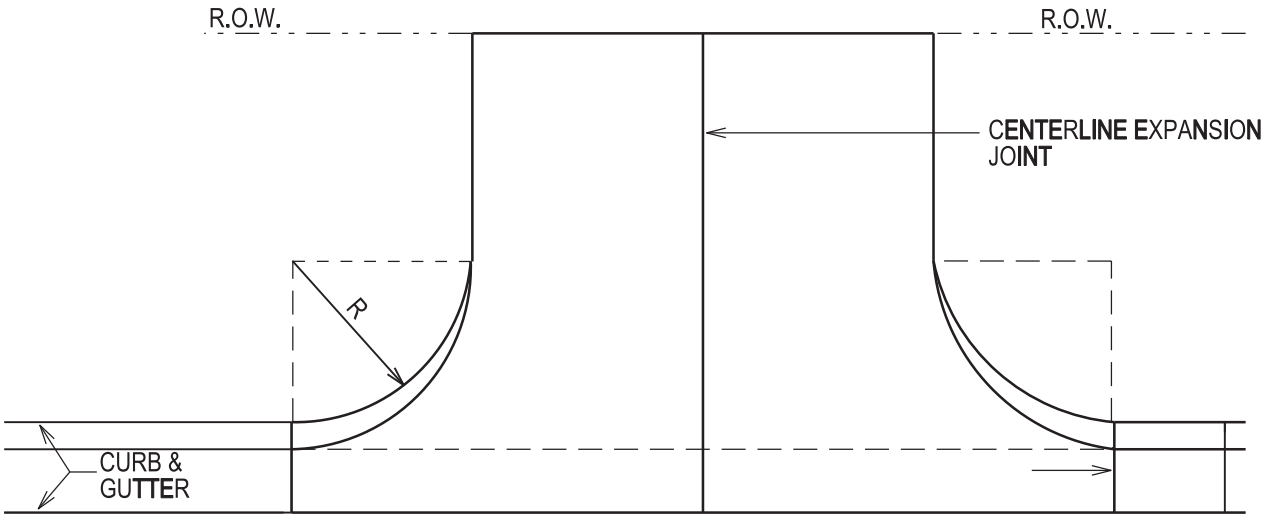

PLAN

CITY OF AUSTIN DEPARTMENT OF PUBLIC WORKS	TYPE I DRIVEWAY (1 & 2 FAMILY RESIDENTIAL USE ONLY)	
RECORD COPY SIGNED BY SAM ANGOORI — *10/19/09* ADOPTED	THE ARCHITECT/ENGINEER ASSUMES RESPONSIBILITY FOR APPROPRIATE USE OF THIS STANDARD.	STANDARD NO. 433S-1 1 OF 4

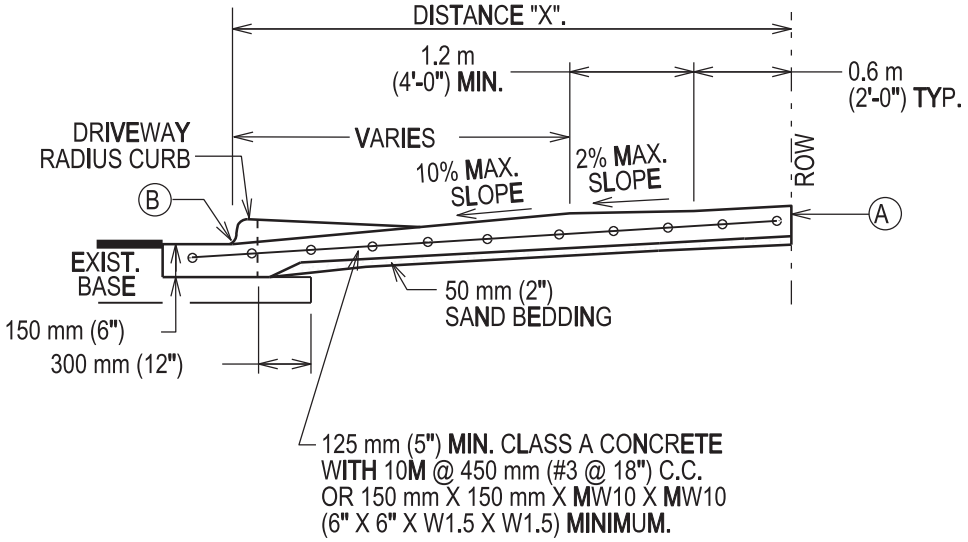

125 mm (5") MIN. CLASS A CONCRETE WITH 10M @ 450 mm (#3 @ 18") C.C. OR 150 mm X 150 mm X MW10 X MW10 (6" X 6" X W1.5 X W1.5) MINIMUM.

REINFORCEMENT SHALL ACCURATELY PLACED AT SLAB MID-DEPTH AND HELD FIRMLY IN PLACE BY MEANS OF BAR SUPPORTS OF ADEQUATE STRENGTH AND NUMBER THAT WILL PREVENT DISPLACEMENT AND KEEP THE STEEL AT ITS PROPER POSITION DURING THE PLACEMENT OF THE P.C. CONCRETE. IN NO INSTANCE SHALL THE STEEL BE PLACED DIRECTLY ON THE SUBGRADE OR SAND CUSHION LAYER.

CROSS SECTION

CITY OF AUSTIN DEPARTMENT OF PUBLIC WORKS		TYPE I DRIVEWAY (1 & 2 FAMILY RESIDENTIAL USE ONLY)	
RECORD COPY SIGNED BY SAM ANGOORI	*10/19/09* ADOPTED	THE ARCHITECT/ENGINEER ASSUMES RESPONSIBILITY FOR APPROPRIATE USE OF THIS STANDARD.	STANDARD NO. 433S-1 2 OF 4

DRIVEWAY CRITERIA	WIDTH METERS (FEET)		
USE	MIN.	*OPT.	MAX.
SIN. FAMILY	3.66 (12)	5.50 (18)	11.80 (25)
DUPLEX	4.56 (15)	5.50 (18)	11.80 (25)
TOWN HOME	4.56 (15)	5.50 (18)	11.80 (25)

*OPTIMUM

RADIUS DIMENSION METERS (FEET)			
USE	MIN.	*OPT.	MAX.
SINGLE FAMILY	1.5 (5)	1.5 (5)	3.0 (10)
DUPLEX	1.5 (5)	2.4 (8)	3.0 (10)
TOWN HOME	1.5 (5)	2.4 (8)	3.0 (10)

*OPTIMUM

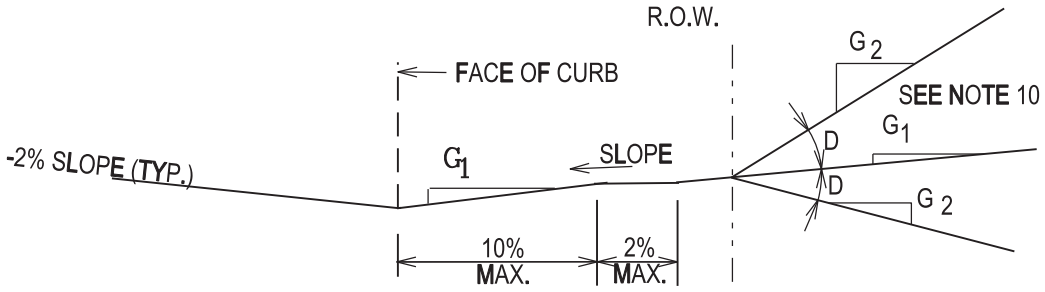

ALLOWABLE GRADES

CITY OF AUSTIN DEPARTMENT OF PUBLIC WORKS		TYPE I DRIVEWAY (1 & 2 FAMILY RESIDENTIAL USE ONLY)	
RECORD COPY SIGNED BY SAM ANGOORI	*10/19/09* ADOPTED	THE ARCHITECT/ENGINEER ASSUMES RESPONSIBILITY FOR APPROPRIATE USE OF THIS STANDARD.	STANDARD NO. 433S-1 3 OF 4

NOTES:

1. "ZERO" CURB AT PT OR SIDEWALK EDGE, WHICHEVER IS ENCOUNTERED FIRST. THE DRIVEWAY EDGE SHALL BE SMOOTHLY TRANSITIONED INTO THE SIDEWALK BEGINNING AT THE RADIUS PC LINE.

2. IF DIMENSION IS LESS THAN 1.5 METERS (5 FEET), REMOVE CURB AND GUTTER TO EXISTING JOINT AND POUR MONOLITHICALLY WITH THE DRIVEWAY.

3. IF THE BASE IS OVER EXCAVATED WHERE THE CURB AND GUTTER WAS REMOVED, BACKFILL WITH CONCRETE MONOLITHICALLY WITH THE DRIVEWAY.

4. ALL DRIVEWAYS MUST BE CONSTRUCTED WITHIN THE STREET FRONTAGE OF THE SUBJECT PROPERTY AS DETERMINED BY EXTENDING THE SIDE PROPERTY LINES TO THE CURB.

5. DRIVEWAYS SHALL NOT EXCEED 70% OF A LOTS' STREET FRONTAGE.

6. TYPE I DRIVEWAYS ARE TO BE LOCATED NO CLOSER TO THE CORNER OF INTERSECTING RIGHTS-OF-WAY THAN 60% OF PARCEL FRONTAGE OR 15 METERS (50 FEET); WHICHEVER IS LESS.

7. DRIVEWAYS SHALL NOT BE CONSTRUCTED WITHIN THE CURB RETURN OF A STREET INTERSECTION.

8. SINGLE FAMILY LOTS LIMITED TO ONE DRIVEWAY EXCEPT FOR APPROVED SEMICIRCULAR DRIVES.

9. WHEN TWO DRIVEWAYS ARE USED (0NE PER UNIT; TWO MAXIMUM) FOR DUPLEXES AND TOWN HOMES, SINGLE FAMILY STANDARDS SHALL APPLY.

10. WHILE THE PROPERTY OWNER REMAINS RESPONSIBLE FOR GRADE BREAKS WITHIN PRIVATE PROPERTY, THE FIRE DEPARTMENT SHOULD BE CONSULTED WHERE THE DRIVEWAY IS ESSENTIAL TO EMERGENCY VEHICLE ACCESS AND "G2" IS GREATER THAN 15%. "G1" PLUS "D" SHOULD NOT EXCEED 15%.

11. SEE TRANSPORTATION MANUAL SECTION 5 FOR OTHER DRIVEWAY REQUIREMENTS.

12. USE 12 mm ($\frac{1}{2}$") ASPHALT BOARD, OR OTHER APPROVED MATERIAL, FOR CURB AND GUTTER EXPANSION JOINTS.

13. THE SIDEWALK, REGARDLESS OF ITS LOCATION WITH RESPECT TO THE CURB OR PROPERTY LINE, SHALL BE CONNECTED TO THE DRIVEWAY AT THESE LOCATIONS.

14. PLACE AN EXPANSION JOINT DOWN THE CENTER OF ALL DRIVEWAYS.

15. WATER METER BOXES AND WASTEWATER CLEAN OUTS ARE PROHIBITED FROM BEING LOCATED IN DRIVEWAY AREAS.

CITY OF AUSTIN DEPARTMENT OF PUBLIC WORKS		TYPE I DRIVEWAY (1 & 2 FAMILY RESIDENTIAL USE ONLY)	
RECORD COPY SIGNED BY SAM ANGOORI	*10/19/09* ADOPTED	THE ARCHITECT/ENGINEER ASSUMES RESPONSIBILITY FOR APPROPRIATE USE OF THIS STANDARD.	STANDARD NO. 433S-1 4 OF 4

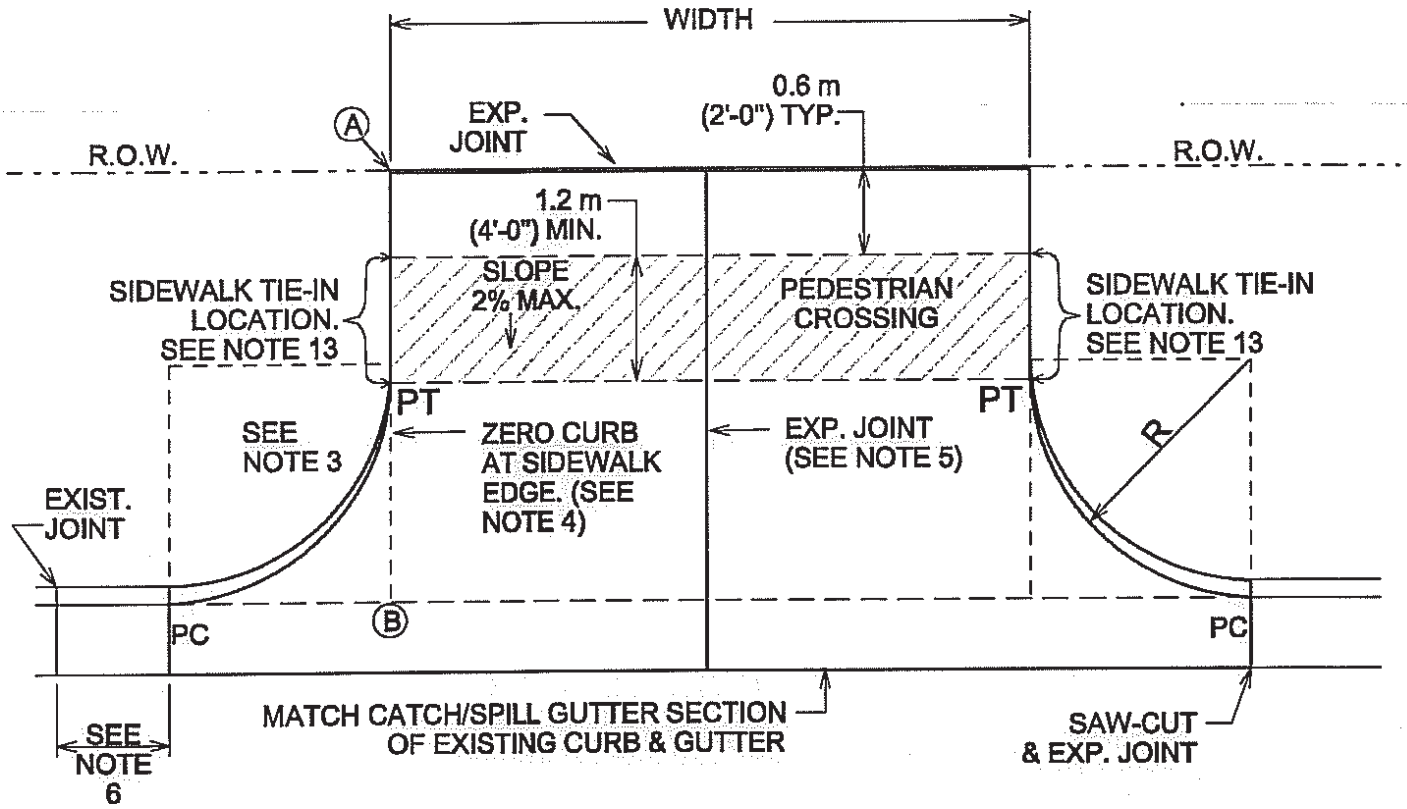

PLAN

NOTE: ALL DRIVEWAYS SHALL BE SLOPED TOWARDS THE STREET FROM THE R.O.W. LINE. ELEVATION OF POINT (A) ABOVE POINT (B) IS, TYPICALLY A MINIMUM OF 150 mm (6") PLUS 20 mm/m ($\frac{1}{4}$" RISE/FOOT) OVER DISTANCE "X" IN METERS (FEET).

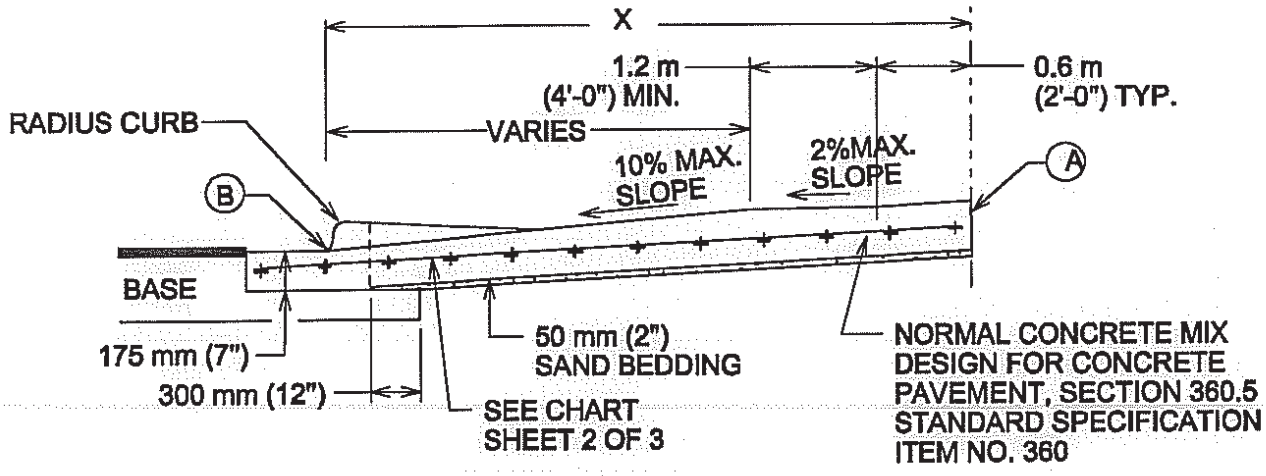

CROSS SECTION

CITY OF AUSTIN DEPARTMENT OF PUBLIC WORKS	TYPE II DRIVEWAY	
2/24/16 ADOPTED	THE ARCHITECT/ENGINEER ASSUMES RESPONSIBILITY FOR APPROPRIATE USE OF THIS STANDARD.	STANDARD NO. 433S-2 1 OF 2

USE	THICKNESS	REINFORCEMENT
DRIVEWAYS FOR PASSENGER VEHICLE PARKING LOTS	150 mm (6") MIN.	125 mm (5") MIN. CONCRETE WITH ONE LAYER OF13M (#4) BARS PLACED ON CHAIRS AT MIDDEPTH OF SLAB AT NO MORE THAN 450 mm (18") O.C. BOTH DIRECTIONS
ALL OTHERS	175 mm (7") MIN.	125 mm (5") MIN. CONCRETE WITH ONE LAYER OF13M (#4) BARS PLACED ON CHAIRS AT MIDDEPTH OF SLAB AT NO MORE THAN 450 mm (18") O.C. BOTH DIRECTIONS

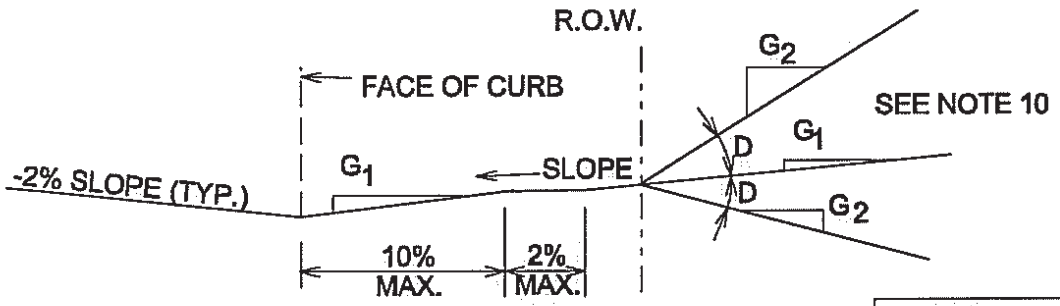

DRIVEWAY VOLUME (ADT)	D=GRADE CHANGE	
	STD.	MAX
>1500	0%	3%
500-1500	3%	6%
<500	6%	15%

ALLOWABLE GRADES

NOTES:

1. ALL TYPE II DRIVEWAYS SHALL HAVE RADIUS ENDS.
2. DRIVEWAY WIDTHS AND RADII DIMENSIONS, ONE/TWO WAY TRAVEL REQUIREMENTS, AND GEOMETRIC LAY-OUT ARE HIGHLY VARIABLE, SUBJECT TO SITE SPECIFIC CONDITIONS AND REQUIREMENTS. SEE TRANSPORTATION CRITERIA MANUAL. SECTION 5 "DRIVEWAYS".
3. THE DRIVEWAY EDGE SHALL BE SMOOTHLY TRANSITITIONED INTO THE SIDEWALK TIE-IN LOCATION BEGINNING AT THE RADIUS PC LINE.
4. "ZERO" CURB AT PT OR SIDEWALK EDGE, WHICHEVER IS ENCOUNTERED FIRST.
5. PLACE AN EXPANSION JOINT DOWN THE CENTER OF DRIVEWAY ALL DRIVEWAYS.
6. IF DIMENSION IS LESS THAN 1.5 METERS (5 FEET), REMOVE CURB AND GUTTER TO EXISTING JOINT AND POUR MONOLITHICALLY WITH DRIVEWAY.
7. IF THE BASE IS OVER-EXCAVATED WHERE THE CURB AND GUTTER WERE REMOVED, BACKFILL WITH CONCRETE MONOLITHICALLY WITH THE DRIVEWAY.
8. TYPE II DRIVEWAYS ARE TO BE LOCATED NO CLOSER TO THE CORNER OF INTERSECTING RIGHT OF WAY THAN 60% OF PARCEL FRONTAGE AT 30 METERS (100 FEET): WHICHEVER IS LESS.
9. DRIVEWAY SHALL NOT BE CONSTRUCTED WITHIN THE CURB RETURN OF A STREET INTERSECTION.
10. WHILE THE PROPERTY OWNER REMAINS RESPONSIBLE FOR GRADE BREAKS WITHIN PRIVATE PROPERTY, THE FIRE DEPARTMENT SHALL BE CONSULTED WHERE THE DRIVEWAY IS ESSENTIAL TO EMERGENCY VEHICLE ACCESS AND "G2 IS GREATER THAN 15%.
11. USE 12 MM (1/2") ASPHALT BOARD OR OTHER APPROVED MATERIAL FOR CURB AND GUTTER EXPANSION JOINTS. SIDEWALK, AT THE R.O.W. LINE AND AT MIDWIDTH, SEE NOTE 5.
12. SEE TRANSPORTATION CRITERIA MANUAL, SECTION 5 FOR OTHER DRIVEWAY REQUIREMENTS.
13. THE SIDEWALK, REGARDLESS OF ITS LOCATION WITH RESPECT TO THE CURB OR PROPERTY LINE, SHALL BE CONNECTED TO THE DRIVEWAY AT THESE LOCATIONS.
14. WATER METER BOXES AND WASTEWATER CLEAN OUTS ARE PROHIBITED FROM BEING LOCATED IN DRIVEWAY AREAS.

CITY OF AUSTIN DEPARTMENT OF PUBLIC WORKS	TYPE II DRIVEWAY	
2/24/10 ADOPTED	THE ARCHITECT/ENGINEER ASSUMES RESPONSIBILITY FOR APPROPRIATE USE OF THIS STANDARD.	STANDARD NO. 433S-2 2 OF 2

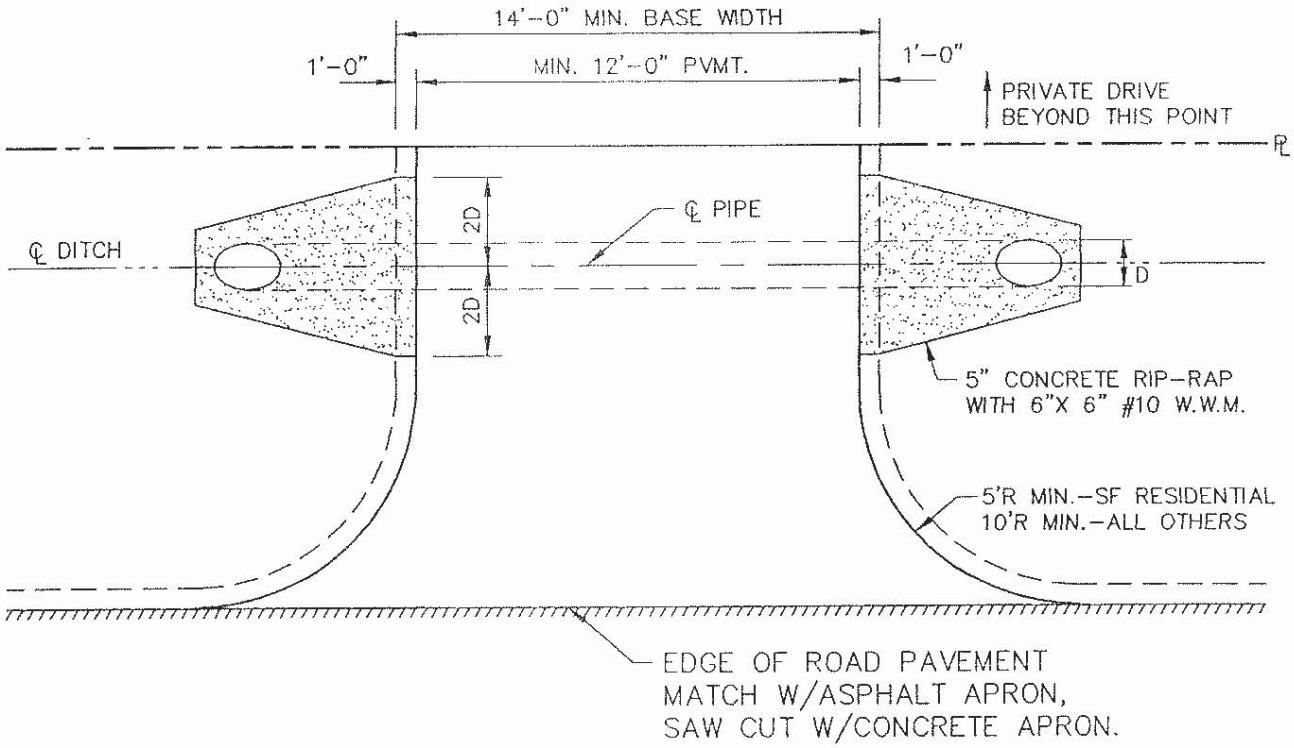

PLAN

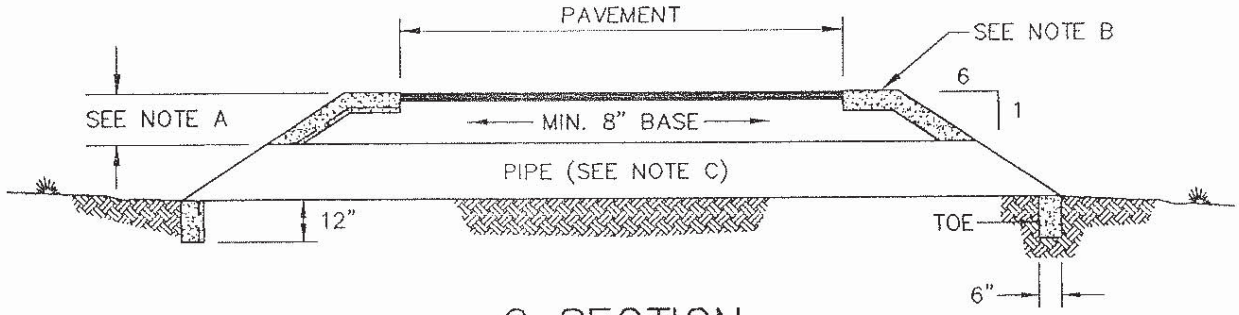

℄ SECTION

NOTES:

A. MIN. COVER TO BE DETERMINED BY CITY ENGINEER.

B. 5" CONCRETE RIP-RAP WITH 6"X 6" #10 W.W.M. SHALL BE INSTALLED.

C. PIPE SIZE AND NUMBER TO BE DESIGNATED BY CITY ENGINEER.

D. 6" CONCRETE WITH #4 BARS @ 18" C-C MAY BE INSTALLED IN LIEU OF ASPHALT PVMT. WHERE APPROPRIATE, OR AS DIRECTED BY CITY.

CITY OF LEANDER, TEXAS		
Scale: NTS	Approved 2/26/97 Date	Drawn by: RPW
DRIVEWAY APRON WITH CULVERT PIPE		Detail No. 202-2

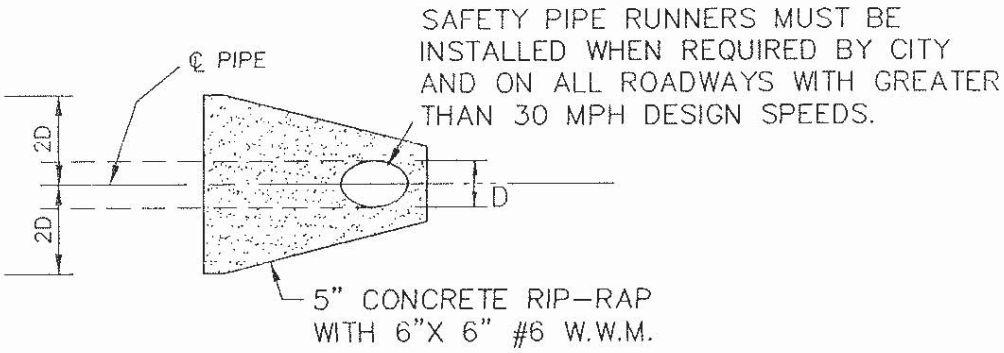

SINGLE PIPE PLAN VIEW

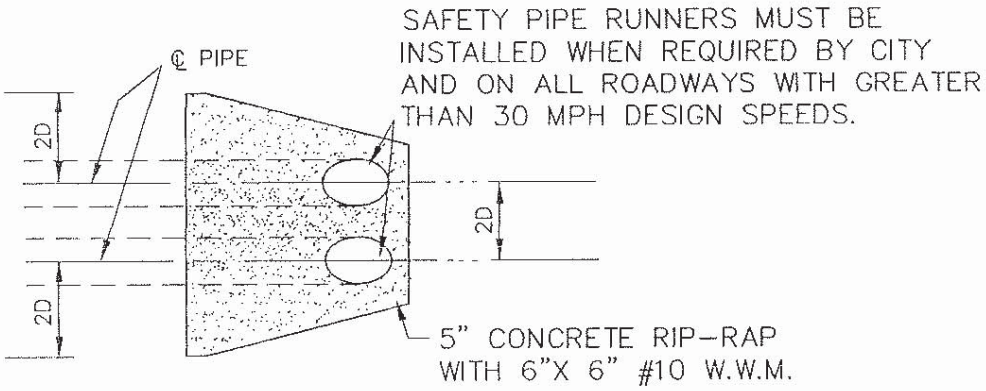

MULTIPLE PIPE PLAN VIEW

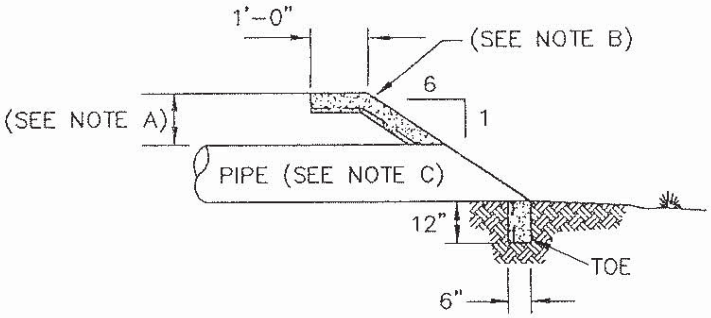

℄ SECTION

NOTES:

A. MIN. COVER TO BE DETERMINED BY CITY ENGINEER.

B. 5" CONCRETE RIP-RAP WITH 6"X 6" #10 W.W.M. SHALL BE INSTALLED.

C. PIPE SIZE AND NUMBER TO BE DESIGNATED BY CITY ENGINEER.

CITY OF LEANDER, TEXAS		
Scale: NTS	Approved 3/26/97 Date	Drawn by: RPW
SAFETY END FOR CULVERT PIPE		Detail No. 202-3

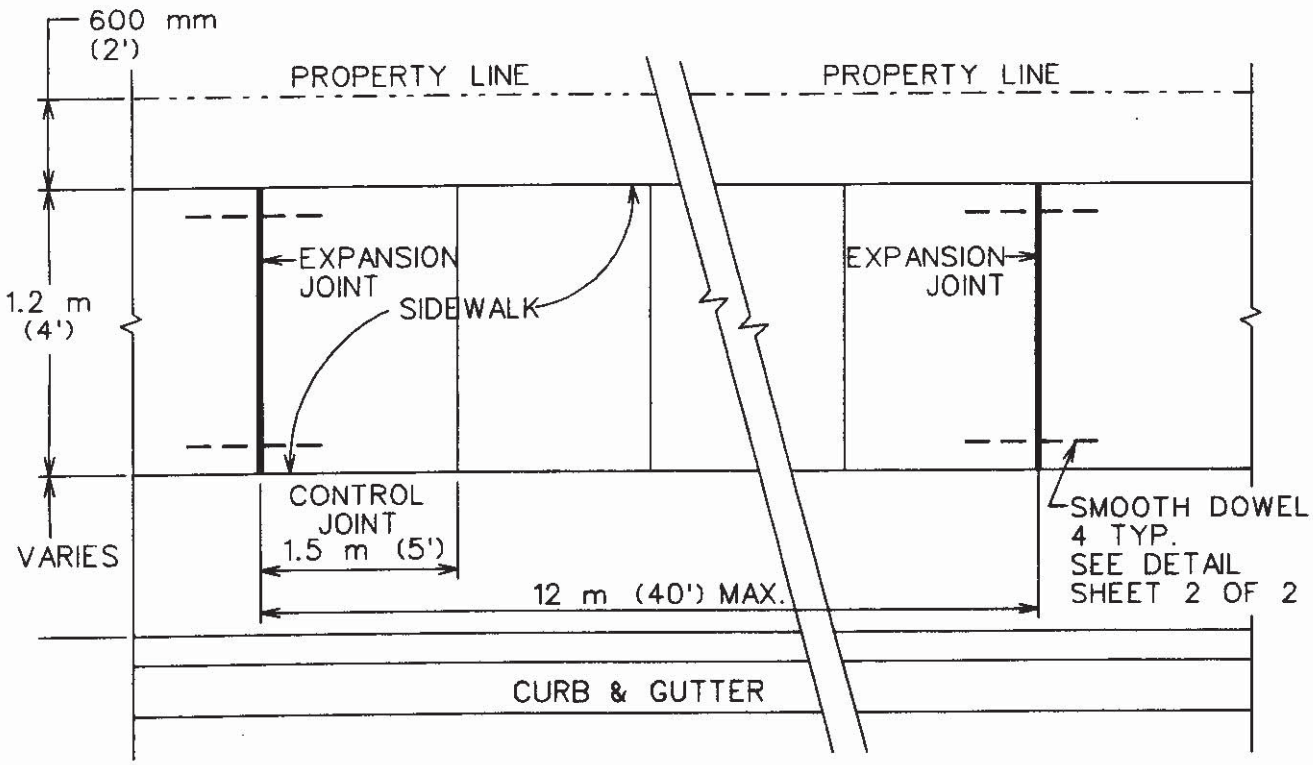

PLAN

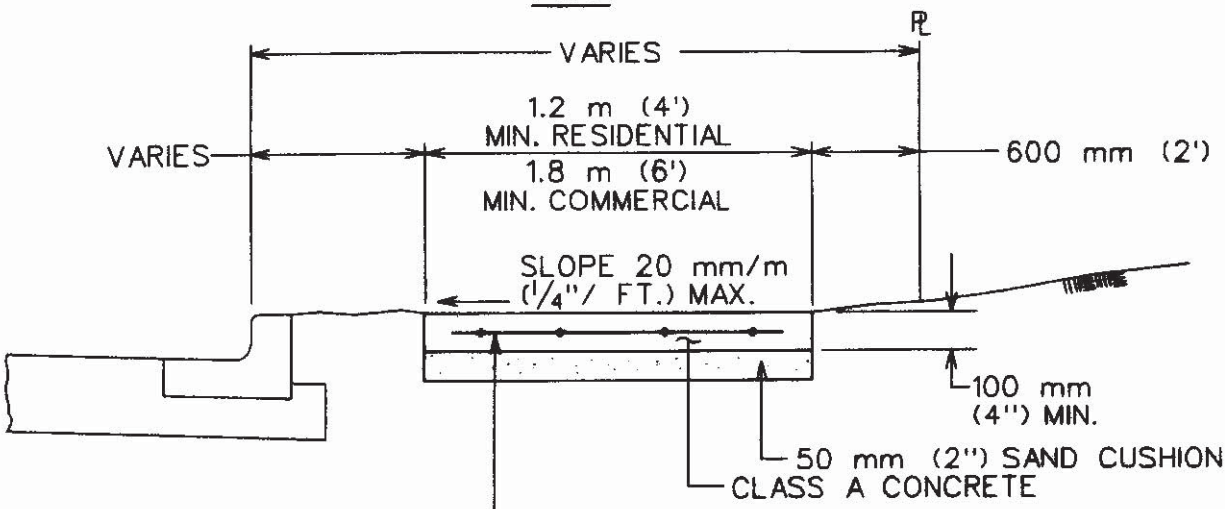

POLYPROPYLENE FIBRILLATED FIBERS, OR 150 mm X 150 mm X MW9 X MW9 (6" X 6" X W1.4 X W1.4) WELDED WIRE FABRIC OR ONE LAYER 10M (#3) BARS PLACED NOT MORE THAN 450 mm (18") C.C. BOTH DIRECTIONS.
REINFORCEMENT SHALL ACCURATELY PLACED AT SLAB MID-DEPTH AND HELD FIRMLY IN PLACE BY MEANS OF BAR SUPPORTS OF ADEQUATE STRENGTH AND NUMBER THAT WILL PREVENT DISPLACEMENT AND KEEP THE STEEL AT ITS PROPER POSITION DURING THE PLACEMENT OF THE P.C. CONCRETE. IN NO INSTANCE SHALL THE STEEL BE PLACED DIRECTLY ON THE SUBGRADE OR SAND CUSHION LAYER.

SECTION

CITY OF AUSTIN DEPARTMENT OF PUBLIC WORKS	SIDEWALK	
Bill Gardner 3/26/08 ADOPTED	THE ARCHITECT/ENGINEER ASSUMES RESPONSIBILITY FOR APPROPRIATE USE OF THIS STANDARD.	STANDARD NO. 432S-1 1 OF 3

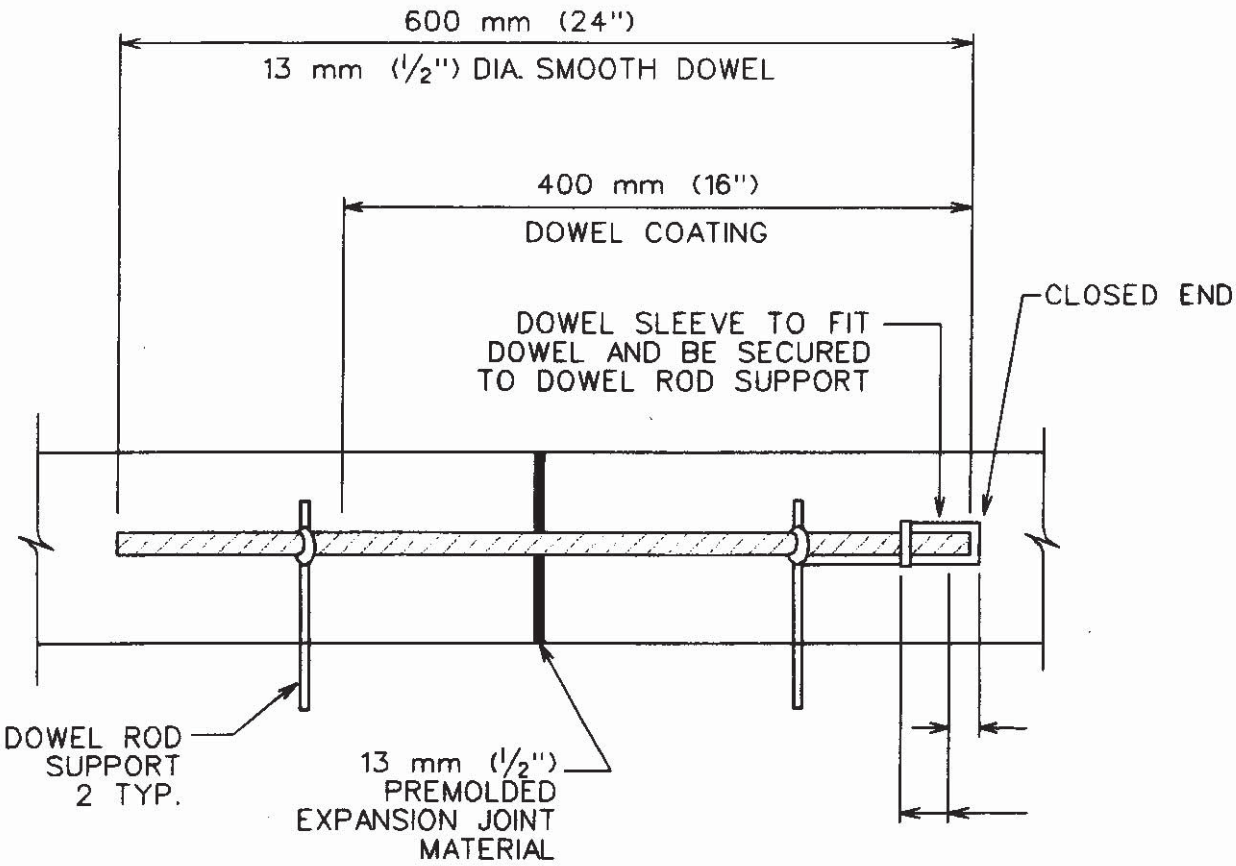

DOWEL DETAIL

CITY OF AUSTIN DEPARTMENT OF PUBLIC WORKS	SIDEWALK	
Bill Gardner 3/26/08 ADOPTED	THE ARCHITECT/ENGINEER ASSUMES RESPONSIBILITY FOR APPROPRIATE USE OF THIS STANDARD.	STANDARD NO. 432S-1 2 OF 3

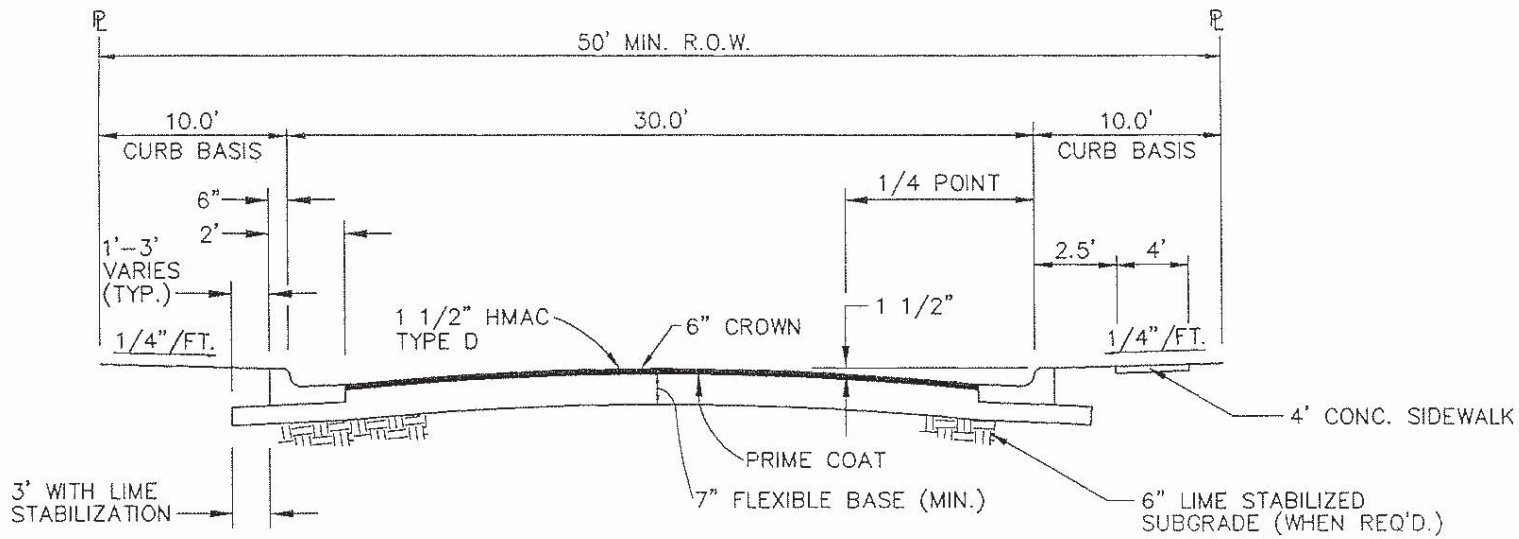

RESIDENTIAL STREET DESIGN

NOTES:
1. ALL UNPAVED AREAS WITHIN THE LIMITS OF CONSTRUCTION SHALL BE SODDED OR SEEDED AS INDICATED.
2. BASE COURSE TO EXTEND BEYOND CURB 1 FOOT FOR SOILS WITH PI OF 20 OR LESS, 3 FEET FOR ALL OTHER SOILS.
3. 4" MINIMUM THICKNESS OF BASE UNDER CURB.
4. CROWN IS PARABOLIC.

CITY OF LEANDER, TEXAS

RESIDENTIAL STREET SECTION

Scale: NTS

Approved: 11/22/98 Date

Drawn by: RPW

Detail No. 204-1

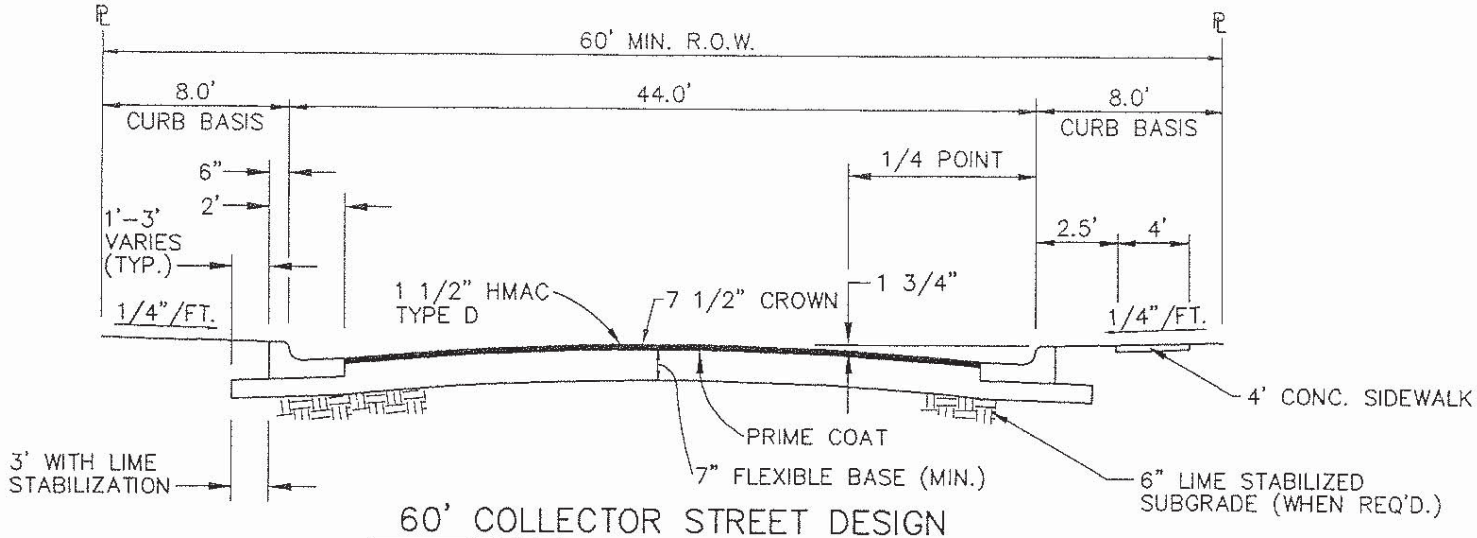

60' COLLECTOR STREET DESIGN

(RESIDENTIAL LOTS FRONTING WITH DIRECT ACCESS)

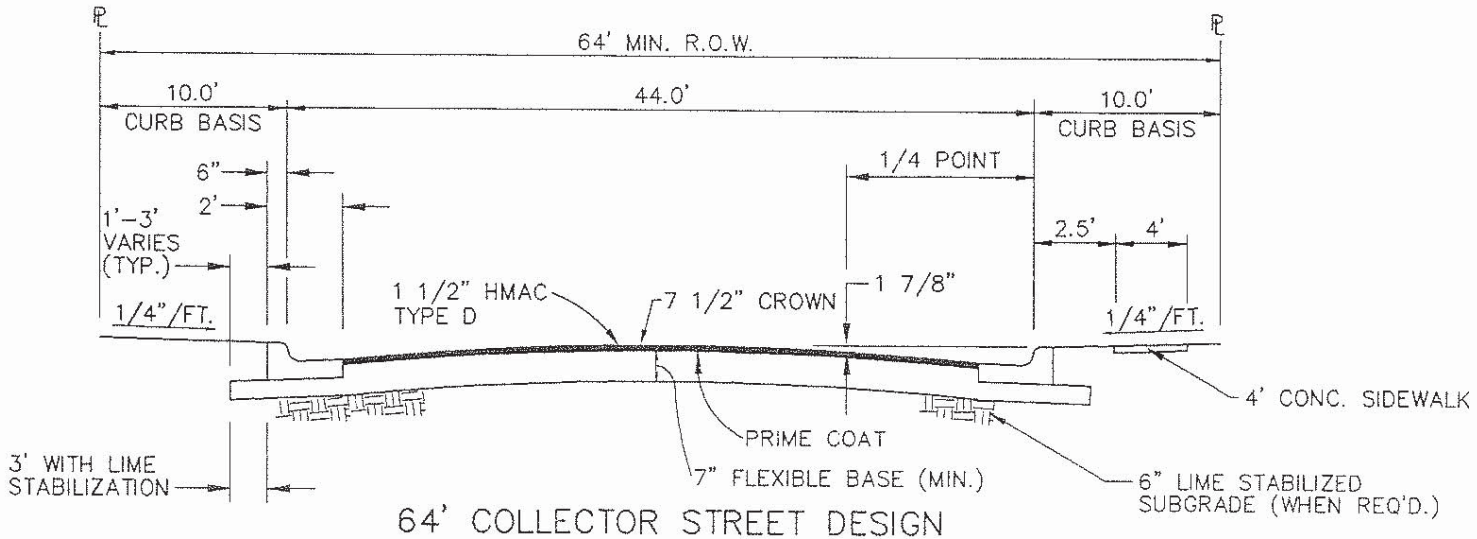

64' COLLECTOR STREET DESIGN

(RESIDENTIAL LOTS NOT FRONTING, EXCEPT MULTI-FAMILY WITH LIMITED ACCESS)

NOTES:
1. ALL UNPAVED AREAS WITHIN THE LIMITS OF CONSTRUCTION SHALL BE SODDED OR SEEDED AS INDICATED.
2. BASE COURSE TO EXTEND BEYOND CURB 1 FOOT FOR SOILS WITH PI OF 20 OR LESS, 3 FEET FOR ALL OTHER SOILS.
3. 4" MINIMUM THICKNESS OF BASE UNDER CURB.
4. CROWN IS PARABOLIC.

CITY OF LEANDER, TEXAS

COLLECTOR STREET SECTIONS

Scale: NTS

Approved

Date 1/22/96

Drawn by: RPW

Detail No. 204-2

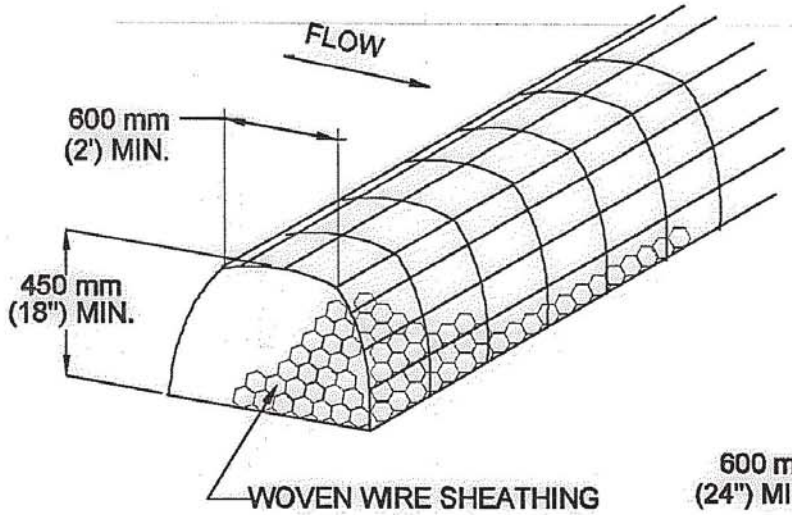

ROCK BERM

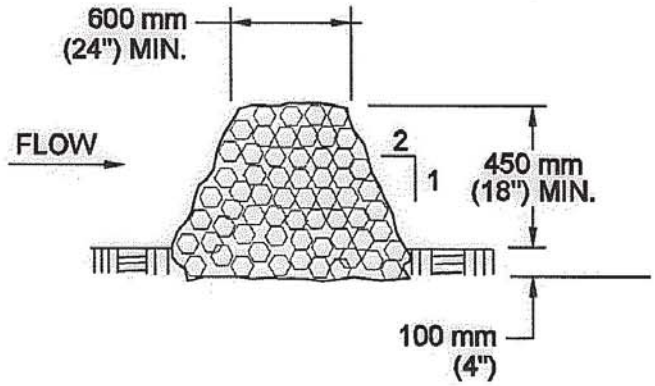

CROSS SECTION

STANDARD SYMBOL
FOR ROCK BERM (RB)

RB

NOTES:

1. USE ONLY OPEN GRADED ROCK 75 to 125 mm (3 to 5") DIAMETER FOR ALL CONDITIONS.
2. THE ROCK BERM SHALL BE SECURED WITH A WOVEN WIRE SHEATHING HAVING MAXIMUM 25 mm (1") OPENING AND MINIMUM WIRE DIAMETER OF 12.9 mm (20 GAUGE).
3. THE ROCK BERM SHALL BE INSPECTED DAILY OR AFTER EACH RAIN, AND THE STONE AND/OR FABRIC CORE-WOVEN SHEATHING SHALL BE REPLACED WHEN THE STRUCTURE CEASES TO FUNCTION AS INTENDED, DUE TO SEDIMENT ACCUMULATION AMONG THE ROCKS, WASHOUT, CONSTRUCTION TRAFFIC DAMAGE, ETC.
4. IF SEDIMENT REACHES A DEPTH EQUAL TO ONE-THIRD THE HEIGHT OF THE BERM OR 150 mm (6"), WHICHEVER IS LESS, THE SEDIMENT SHALL BE REMOVED AND DISPOSED OF ON AN APPROVED SITE AND IN A MANNER THAT WILL NOT CREATE A SEDIMENTION PROBLEM.
5. WHEN THE SITE IS COMPLETELY STABILIZED,THE BERM AND ACCUMULATED SEDIMENT SHALL BE REMOVED AND DISPOSED OF IN AN APPROVED MANNER.

CITY OF AUSTIN WATERSHED PROTECTION DEPARTMENT	ROCK BERM	
Mary S. Ryan P.E. 8/24/2010 ADOPTED	THE ARCHITECT/ENGINEER ASSUMES RESPONSIBILITY FOR APPROPRIATE USE OF THIS STANDARD.	STANDARD NO. 639S-1

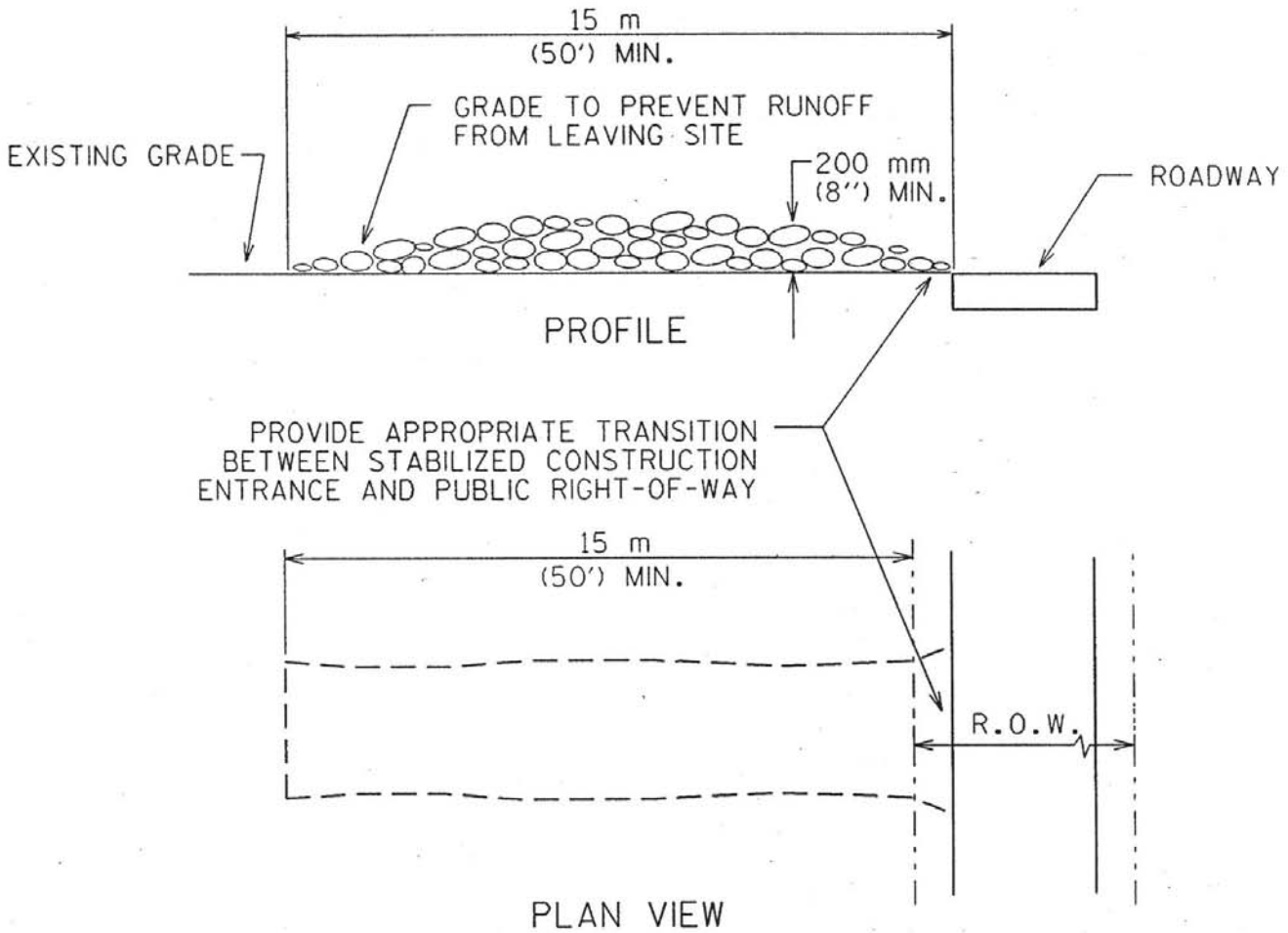

NOTES:

1. STONE SIZE: 75-125 mm (3-5") OPEN GRADED ROCK.
2. LENGTH: AS EFFECTIVE BUT NOT LESS THAN 15 m (50').
3. THICKNESS: NOT LESS THAN 200 mm (8").
4. WIDTH: NOT LESS THAN FULL WIDTH OF ALL POINTS OF INGRESS/EGRESS.
5. WASHING: WHEN NECESSARY, VEHICLE WHEELS SHALL BE CLEANED TO REMOVE SEDIMENT PRIOR TO ENTRANCE ONTO PUBLIC ROADWAY. WHEN WASHING IS REQUIRED, IT SHALL BE DONE ON AN AREA STABILIZED WITH CRUSHED STONE AND DRAINS INTO AN APPROVED TRAP OR SEDIMENT BASIN. ALL SEDIMENT SHALL BE PREVENTED FROM ENTERING ANY STORM DRAIN, DITCH OR WATERCOURSE USING APPROVED METHODS.
6. MAINTENANCE: THE ENTRANCE SHALL BE MAINTAINED IN A CONDITION THAT WILL PREVENT TRACKING OR FLOWING OF SEDIMENT ONTO PUBLIC ROADWAY. THIS MAY REQUIRE PERIODIC TOP DRESSING WITH ADDITIONAL STONE AS CONDITIONS DEMAND, AS WELL AS REPAIR AND CLEAN OUT OF ANY MEASURE DEVICES USED TO TRAP SEDIMENT. ALL SEDIMENTS THAT IS SPILLED, DROPPED, WASHED OR TRACKED ONTO PUBLIC ROADWAY MUST BE REMOVED IMMEDIATELY.
7. DRAINAGE: ENTRANCE MUST BE PROPERLY GRADED OR INCORPORATE A DRAINAGE SWALE TO PREVENT RUNOFF FROM LEAVING THE CONSTRUCTION SITE.

CITY OF AUSTIN WATERSHED PROTECTION DEPARTMENT	STABILIZED CONSTRUCTION ENTRANCE	
Leon Barba 5/23/00 ADOPTED	THE ARCHITECT/ENGINEER ASSUMES RESPONSIBILITY FOR APPROPRIATE USE OF THIS STANDARD.	STANDARD NO. 641S-1

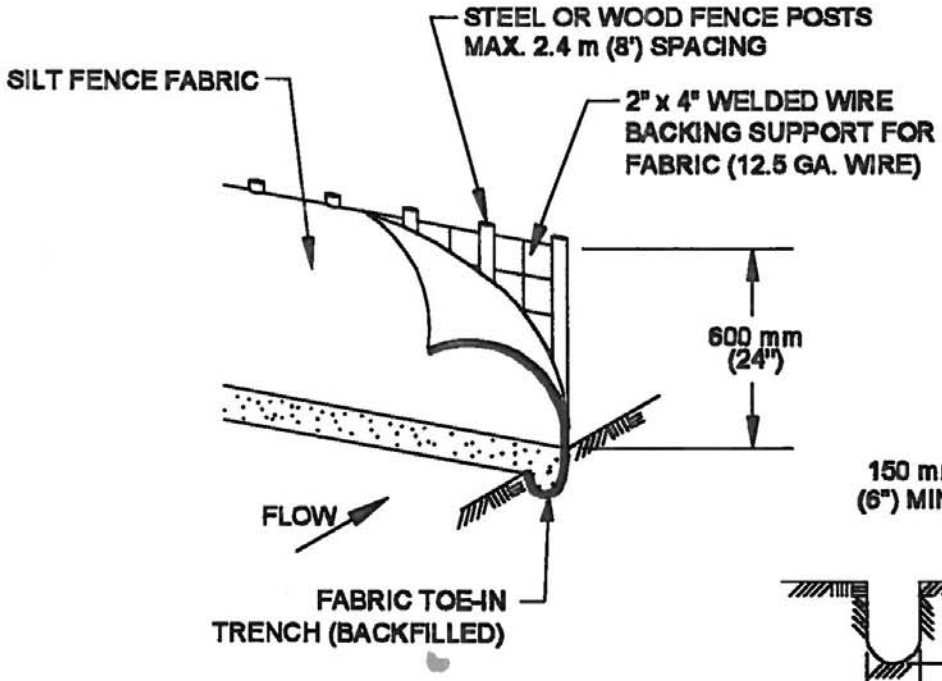

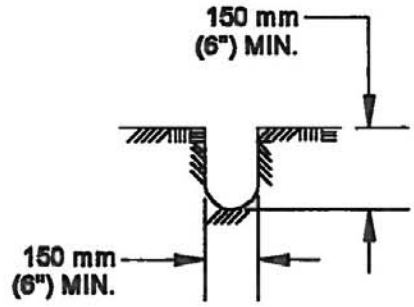

TRENCH CROSS SECTION

STANDARD SYMBOL
FOR SILT FENCE (SF)

SF
L=

1. STEEL OR WOOD POSTS WHICH SUPPORT THE SILT FENCE SHALL BE INSTALLED ON A SLIGHT ANGLE TOWARD THE ANTICIPATED RUNOFF SOURCE. POST MUST BE EMBEDDED A MINIMUM OF 300 mm (12 INCHES). IF WOOD POSTS CANNOT ACHIEVE 300 mm (12 inches) DEPTH, USE STEEL POSTS.

2. THE TOE OF THE SILT FENCE SHALL BE TRENCHED IN WITH A SPADE OR MECHANICAL TRENCHER, SO THAT THE DOWNSLOPE FACE OF THE TRENCH IS FLAT AND PERPENDICULAR TO THE LINE OF FLOW.

3. THE TRENCH MUST BE A MINIMUM OF 150 mm (6 inches) DEEP AND 150 mm (6 inches) WIDE TO ALLOW FOR THE SILT FENCE FABRIC TO BE LAID IN THE GROUND AND BACKFILLED WITH COMPACTED MATERIAL.

4. SILT FENCE FABRIC SHOULD BE SECURELY FASTENED TO EACH STEEL OR WOOD SUPPORT POST OR TO WOVEN WIRE , WHICH IS IN TURN ATTACHED TO THE STEEL OR WOOD FENCE POST.

5. INSPECTION SHALL BE MADE WEEKLY OR AFTER EACH RAINFALL EVENT AND REPAIR OR REPLACEMENT SHALL BE MADE PROMPTY AS NEEDED.

6. SILT FENCE SHALL BE REMOVED WHEN THE SITE IS COMPLETELY STABILIZED SO AS NOT TO BLOCK OR IMPEDE STORM FLOW OR DRAINAGE.

7. ACCUMULATED SILT SHALL BE REMOVED WHEN IT REACHES A DEPTH OF 150 mm (6 inches). THE SILT SHALL BE DISPOSED OF ON AN APPROVED SITE AND IN SUCH A MANNER THAT WILL NOT CONTRIBUTE TO ADDITIONAL SILTATION.

CITY OF AUSTIN WATERSHED PROTECTION DEPARTMENT	SILT FENCE	
9/1/2011 ADOPTED	THE ARCHITECT/ENGINEER ASSUMES RESPONSIBILITY FOR APPROPRIATE USE OF THIS STANDARD.	STANDARD NO. 642S-1

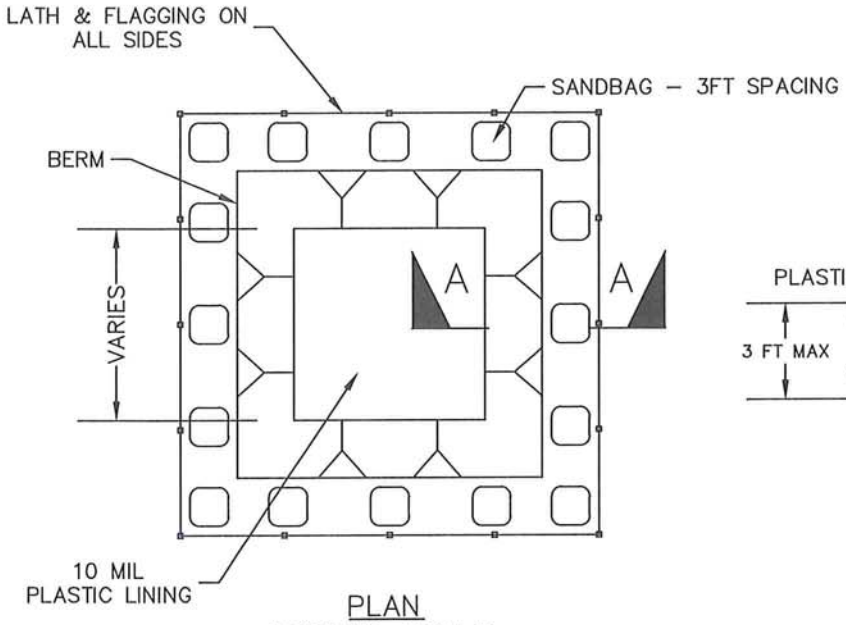

PLAN
NOT TO SCALE
TYPE "BELOW GRADE"

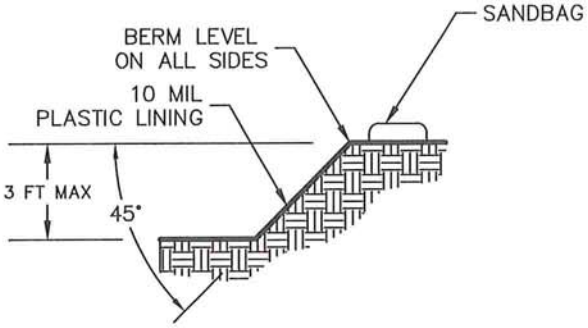

SECTION A–A
NOT TO SCALE

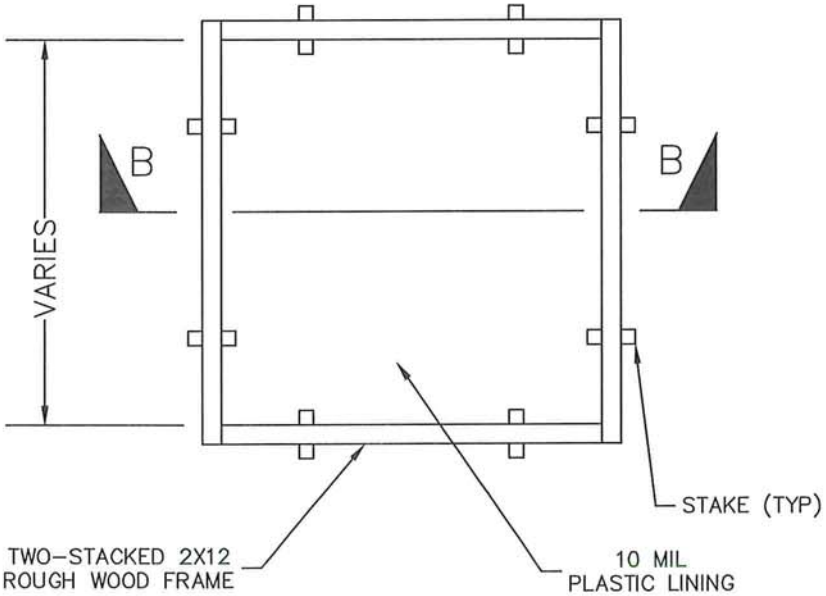

PLAN
NOT TO SCALE
TYPE "ABOVE GRADE"

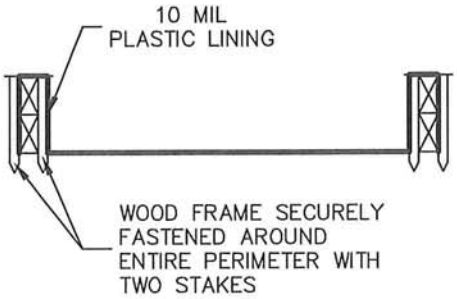

SECTION B–B
NOT TO SCALE

NOTES
1. ACTUAL LAYOUT DETERMINED IN FIELD

STATE OF TEXAS
WAYNE S. WATTS
86134
LICENSED
PROFESSIONAL ENGINEER

Wayne S. Watts
01/30/15

City Of Leander, Texas

303-1
CONCRETE WASHOUT

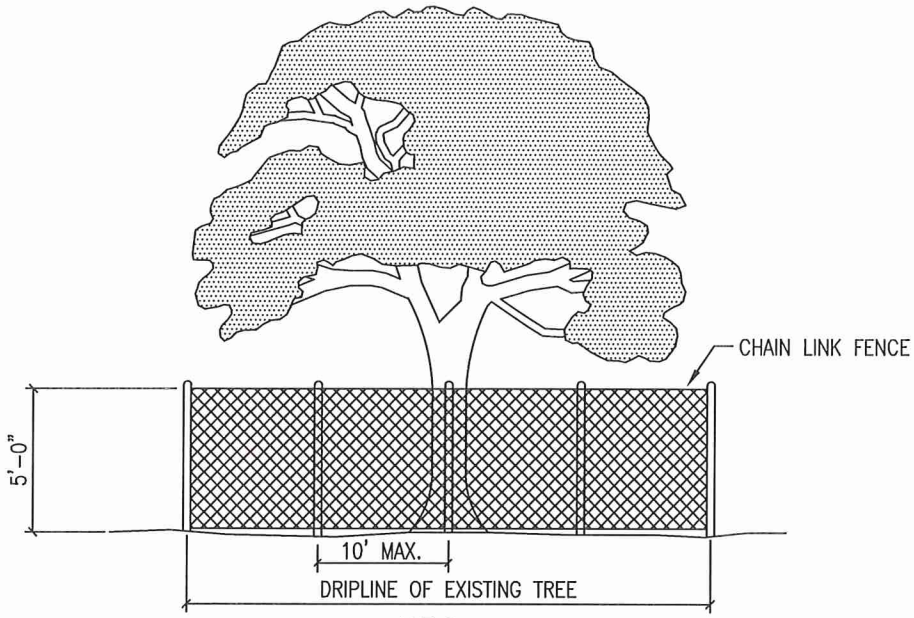

N.T.S.

1. TREE PROTECTION FENCES SHALL BE INSTALLED PRIOR TO THE COMMENCEMENT OF ANY SITE PREPARATION WORK (CLEARING, GRUBBING OR GRADING).
2. FENCES SHALL COMPLETELY SURROUND THE TREE, OR CLUSTERS OF TREES; SHALL BE LOCATED AT THE OUTERMOST LIMIT OF THE TREE BRANCHES (DRIPLINE), AND SHALL BE MAINTAINED THROUGHOUT THE CONSTRUCTION PROJECT IN ORDER TO PREVENT THE FOLLOWING:
   - A. SOIL COMPACTION IN THE ROOT ZONE AREA RESULTING FROM VEHICULAR TRAFFIC, OR STORAGE OF EQUIPMENT OR MATERIALS.
   - B. ROOT ZONE DISTURBANCES DUE TO GRADE CHANGES (GREATER THAN SIX INCHES (6")) CUT OR FILL, OR TRENCHING NOT REVIEWED AND AUTHORIZED BY THE CITY.
   - C. WOUNDS TO EXPOSED ROOTS, TRUNKS OR LIMBS BY MECHANICAL EQUIPMENT.
   - D. OTHER ACTIVITIES DETRIMENTAL TO TREES, SUCH AS CHEMICAL STORAGE, CEMENT TRUCK CLEANING AND FIRE.
3. EXCEPTIONS TO INSTALLING FENCES AT TREE DRIPLINES MAY BE PERMITTED IN THE FOLLOWING CASES:
   - A. WHERE PERMEABLE PAVING IS TO BE INSTALLED, ERECT THE FENCE AT THE OUTER LIMITS OF THE PERMEABLE PAVING AREA.
   - B. WHERE TREES ARE CLOSE TO PROPOSED BUILDINGS, ERECT THE FENCE NO CLOSER THAN SIX FEET (6'-0") TO BUILDING.
4. CRITICAL ROOT ZONE REQUIREMENTS
   - A. NO CONSTRUCTION OR DISTURBANCE SHALL OCCUR WITHIN AN AREA THAT CONSTITUTES MORE THAN FIFTY (50%) OF THE TOTAL CRITICAL ROOT ZONE AND ONE HALF THE RADIAL DISTANCE OF THE CRITICAL ROOT ZONE FOR EACH TREE BEING PRESERVED INCLUDING SIGNIFICANT TREES, HERITAGE TREES, AND ANY OTHER TREES FOR WHICH PRESERVATION IS TO BE CREDITED. THE REMAINING CRITICAL ROOT ZONE SHALL CONSIST OF AT LEAST ONE HUNDRED (100) SQUARE FEET.
   - B. THIS DEFINED AREA SHALL BE FLAGGED AND ENCIRCLED WITH PROTECTIVE FENCING DURING CONSTRUCTION. THE PLANNING DIRECTOR MAY APPROVE CONSTRUCTION CLOSER TO THE TRUNK THAN ONE HALF (½) THE RADIAL DISTANCE, DEPENDING ON THE SIZE, SPACING, OR SPECIES OF THE TREE, THE TYPE OF DISTURBANCE PROPOSED, AND UNIQUENESS OF THE SITUATION.
   - C. CUT OR FILL THAT IS GREATER THAN FOUR (4) INCHES IN DEPTH AND THE SEVERING OF MAJOR ROOTS SHALL BE CONSIDERED DISTURBANCE FOR THE PURPOSES OF THIS ORDINANCE.
   - D. WITHIN THE PROTECTED CRITICAL ROOT ZONE, ONLY FLATWORK, DECKING, OR SIMILAR CONSTRUCTION, MAY BE APPROVED AND SHALL NOT AFFECT THE BRANCHING OF THE TREE.
   - E. IF PROPOSED OR ACTUAL PROTECTION OF THE CRITICAL ROOT ZONE OF A TREE DOES NOT MEET THE REQUIREMENTS OF THIS SECTION, THEN THE TREE SHALL BE CONSIDERED REMOVED AND SHALL REQUIRE MITIGATION IN ACCORDANCE WITH THIS ORDINANCE.

STATE OF TEXAS
WAYNE S. WATTS
86134
LICENSED
PROFESSIONAL ENGINEER

Wayne S. Watts
08/21/15

City Of Leander, Texas

303-2
TREE PROTECTION

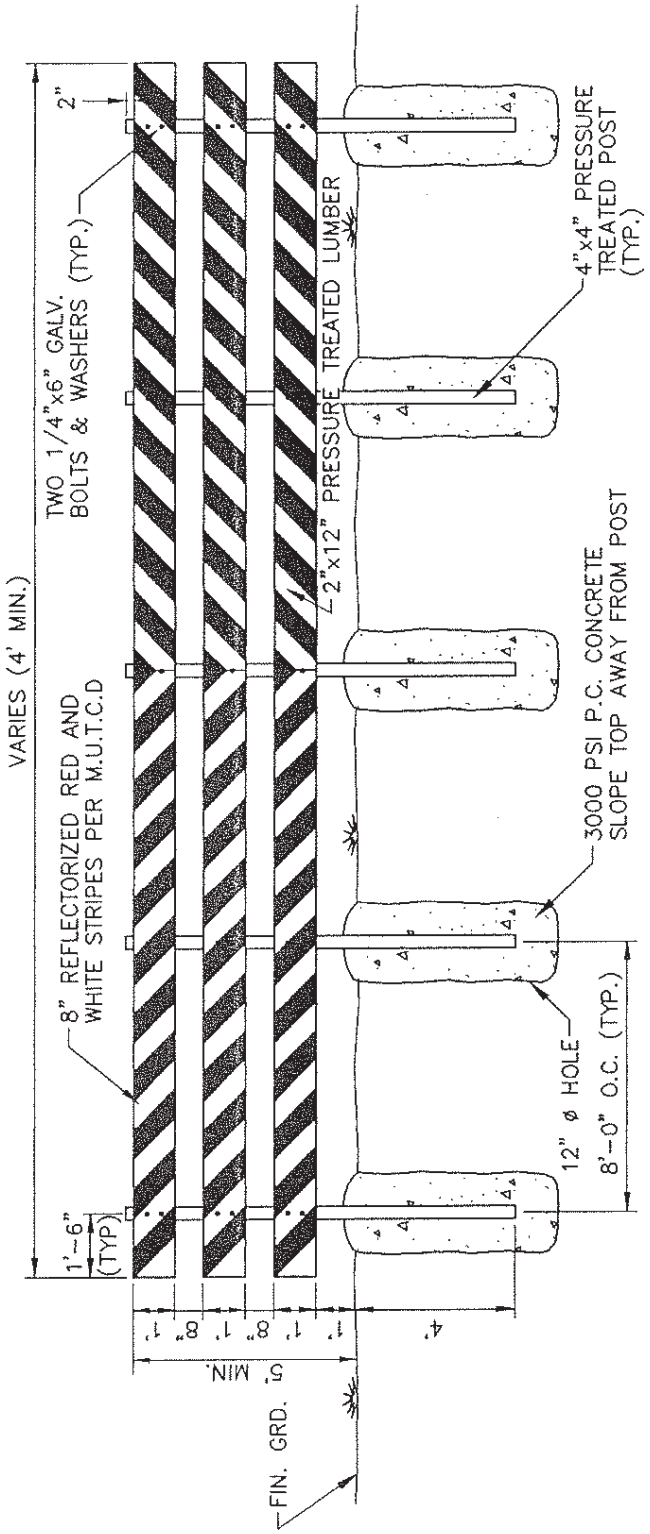

CITY OF LEANDER, TEXAS

Scale: NTS	Approved 11/22/20 Date	Drawn by: RPW
TRAFFIC BARRICADE TYPE III		Detail No. 400-1

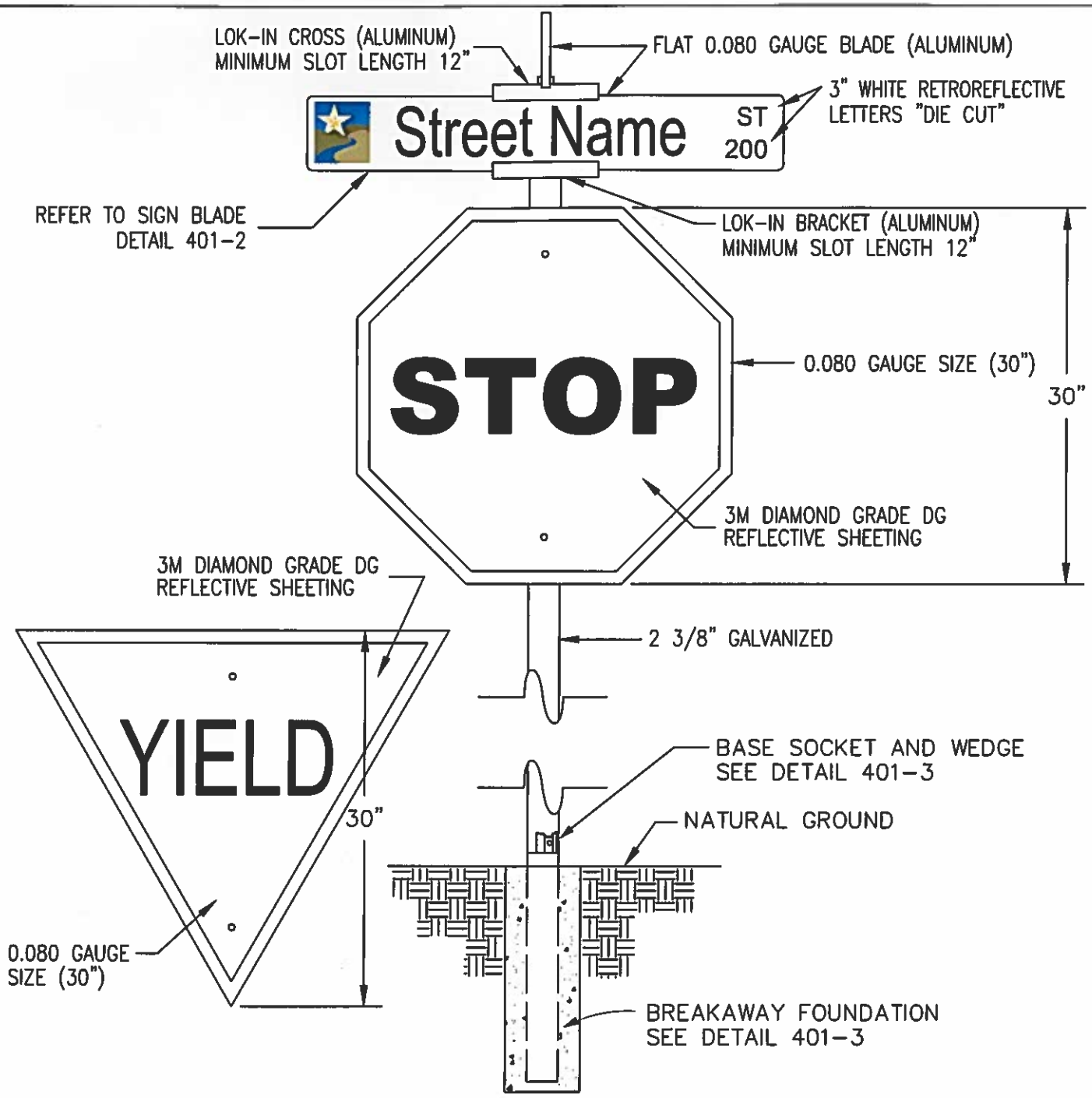

NOTES:

1. 7-FOOT MIN. HEIGHT FROM GROUND TO BOTTOM OF SIGN.
2. ALL SIGNS TO BE IN CONFORMANCE WITH THE CURRENT EDITION OF THE TEXAS MANUAL OF UNIFORM TRAFFIC CONTROL DEVICES (TMUTCD).
3. ALL SIGNAGE SHEETINGS SHALL BE 3M DIAMOND GRADE DG REFLECTIVE SHEETING.

The Architect/Engineer assumes responsibility for appropriate use of this standard.

STATE OF TEXAS
WAYNE S. WATTS
86134
LICENSED
PROFESSIONAL ENGINEER

Wayne S. Watts
11/20/15

City Of Leander, Texas

DETAIL #401-1
STREET SIGNS

STREET NAME SIGNS:

1) HEIGHT SHALL BE EITHER:

a) 9 INCHES WITH 6-INCH UPPER CASE AND 4.5-INCH LOWER CASE LETTERING ON STREETS WITH SPEED LIMITS 40 MPH OR LESS OR ON STREETS WITH ANY SPEED LIMIT THAT HAVE NO MORE THAN TWO LANES;

b) 10 INCHES WITH 8-INCH UPPER CASE AND 6-INCH LOWER CASE LETTERING ON STREETS WITH SPEED LIMITS GREATER THAN 40 MPH AND MORE THAN TWO LANES.

2) 0.080 INCH THICK ALUMINUM BLANK. LENGTH DEPENDENT ON STREET NAME WITH A MINIMUM OF 24 INCHES. COVERED ON BOTH SIDES WITH 3M DIAMOND GRADE, WHITE, REFLECTIVE SHEETING (3M NUMBER 4090). STREET NAME WILL BE CUT OUT OF GREEN, 3M ELECTRO CUT FILM (3M NUMBER 1177C).

3) STREET DESIGNATION (DR, ST, TRL, RD, ETC.) IN UPPER RIGHT-HAND CORNER, BEGINNING BLOCK NUMBER UNDERNEATH. A CITY LOGO STICKER WILL BE PLACED ON THE LEFT-HAND SIDE OF THE SIGN AS SHOWN IN THE ABOVE ILLUSTRATION.

A. ALL FONTS SHALL BE TRAFFIC CAD SERIES B OR FHWA SERIES B.

B. NO WATER-BASED ADHESIVES ARE PERMISSIBLE FOR USE IN ANY PART OF SIGN.

C. CITY LOGO STICKERS SHALL BE 5.4 BY 6 INCHES FOR 9-INCH BLADES AND 7.2 BY 8 INCHES FOR 10-INCH BLADES.

D. LEANDER LOGO AVAILABLE FOR PURCHASE FROM AFFORDABLE SIGNS AT (512) 869-5888

4185 E. UNIVERSITY AVENUE
SUITE A
GEORGETOWN, TX 78626

E. ADDITIONALLY, THE .JPG FILE FOR THE CITY LOGO IS AVAILABLE FROM THE CITY OF LEANDER ENGINEERING DEPARTMENT AT (512) 528-2700. ANY CITY LOGO STICKERS FROM OTHER SOURCES MUST FIRST BE APPROVED BY THE PUBLIC WORKS DEPARTMENT.

STATE OF TEXAS
WAYNE S. WATTS
86134
LICENSED
PROFESSIONAL ENGINEER

Wayne S. Watts
11/20/15

City Of Leander, Texas

DETAIL #401-2
STREET NAME SIGN BLADES

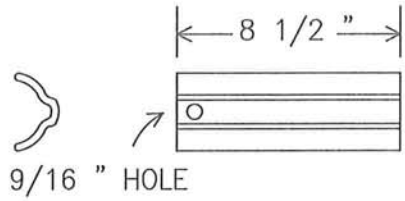

WEDGE

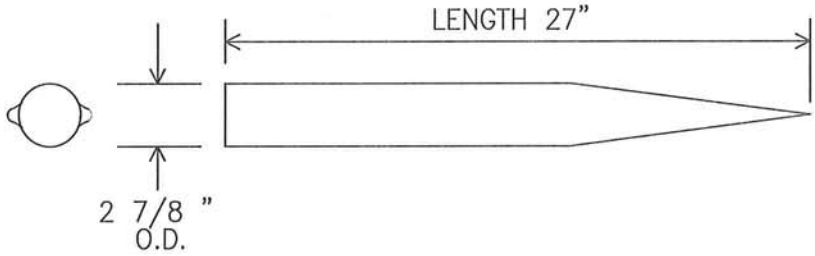

BASE SOCKET

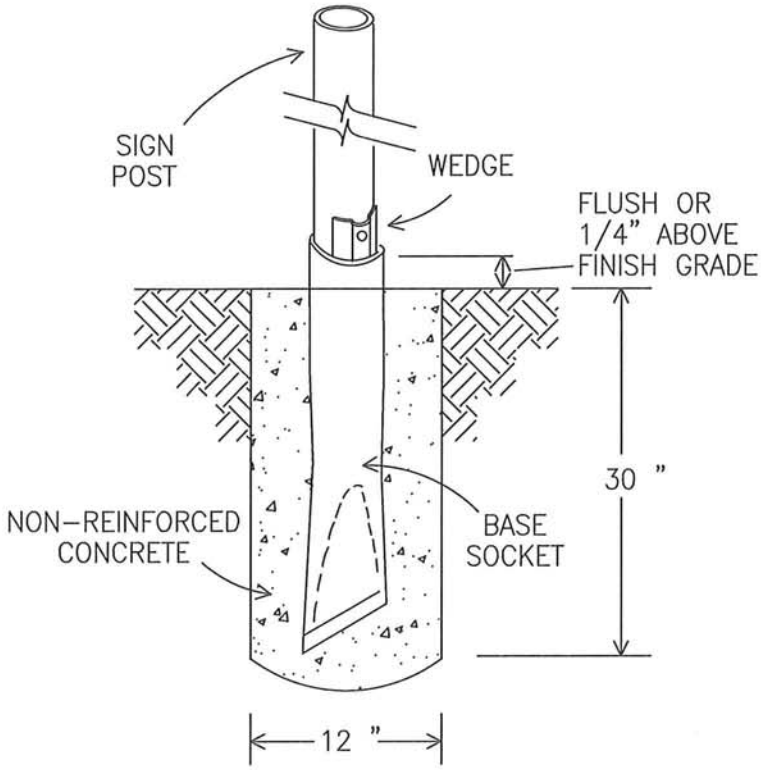

TYPICAL ASSEMBLY

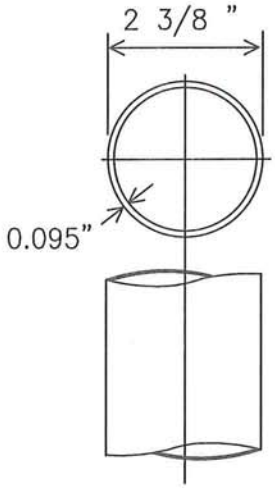

SIGN POST

The Architect/Engineer assumes responsibility for appropriate use of this standard.

STATE OF TEXAS
WAYNE S. WATTS
86134
LICENSED
PROFESSIONAL ENGINEER

Wayne S. Watts
03/27/14

City Of Leander, Texas

401-3
POZ-LOC FOUNDATION

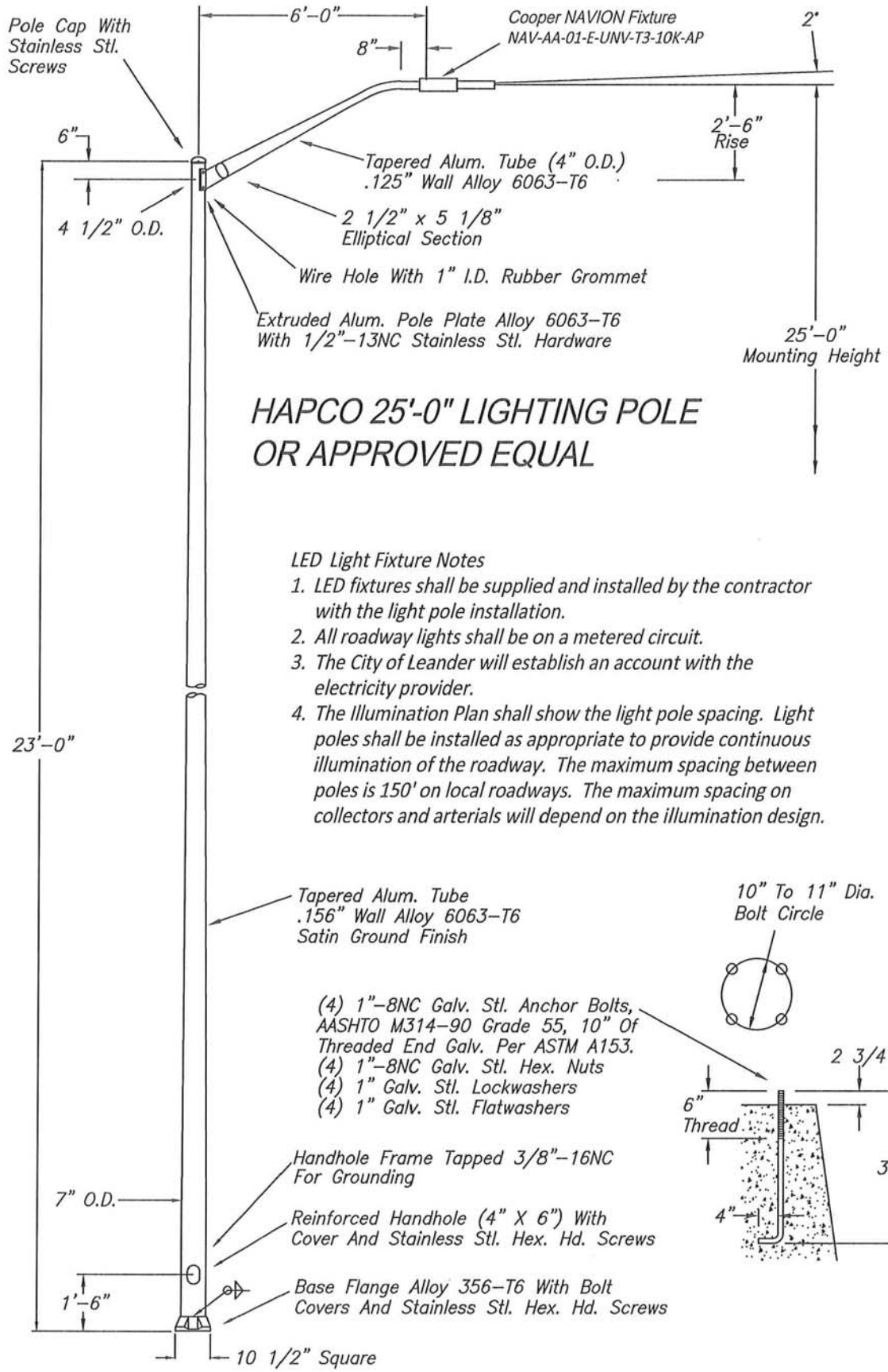

LED Light Fixture Notes

1. LED fixtures shall be supplied and installed by the contractor with the light pole installation.
2. All roadway lights shall be on a metered circuit.
3. The City of Leander will establish an account with the electricity provider.
4. The Illumination Plan shall show the light pole spacing. Light poles shall be installed as appropriate to provide continuous illumination of the roadway. The maximum spacing between poles is 150' on local roadways. The maximum spacing on collectors and arterials will depend on the illumination design.

STATE OF TEXAS
WAYNE S. WATTS
86134
LICENSED
PROFESSIONAL ENGINEER

Wayne S. Watts
01/30/14

City Of Leander, Texas

DETAIL #402-1

STANDARD LIGHTING POLE