Residential Building Inspection Guidelines

City of Leander
Inspections and Permits

EFFECTIVE SEPTEMBER 4, 2006
Revised August 16, 2016

Preface

The following information has been arranged as a guideline for the construction process for builders and contractors working within the inspection jurisdiction of the City of Leander. Some items are clearly defined within the current City of Leander Ordinance, while others are standard procedures set forth by the Inspections and Permits Division of the City of Leander.

This material is to be used as a guideline only and may not include all circumstances or building practices that occur in the field.

In order to provide for quality, cost effective construction, please familiarize yourself with these guidelines

Online permitting using MyPermitNow (MPN)
at www.mypermitnow.org effective September 1, 2014.

Contents

- MPN Required Inspections
- Inspection Descriptions
- Common Turndowns
- Contact Information – City of Leander
- Contact Information – Outside Entities
- Building Permit and Inspection Fees
- Fire Code Permit and Inspection Fees
- Zoning Compliance Officer Inspections
- Driveway Specifications

MPN Required Inspections

Priority 5

- Layout Inspection (upload survey on MPN)
- Temporary Electric Loop
- Water / Sewer Yard Lines
- Plumbing Rough Inspection

Priority 6

- Engineer's Pre-Pour Report (upload on MPN)
- Pre-Pour Inspection

Priority 7

- Sheathing

Priority 8

- Plumbing Top-Out
- Gas Test
- Electrical Rough
- Mechanical Rough
- Frame Inspection
- Masonry/Wall Tie Inspection

Priority 9

- Insulation Inspection
- Sidewalk/Driveway Pre-Pour

Priority 10

- Permanent Power (electric meter release)
- 2nd Gas Test (gas meter release) (if applicable)
- Soil Certificate (upload on MPN)

Priority 11

- Plumbing Final
- Electrical Final
- Mechanical Final
- Building Final
- Landscaping Inspection
- Site Inspection
- Energy Compliance Testing

Inspection Descriptions

The City Noise Ordinance considers the construction of any building or structure between the hours of 9:00 p.m. and 7:00 a.m. a nuisance. Please review the noise ordinance in detail on the city's website at www.leandertx.gov.

Layout (uploaded on MPN)
Foundation form boards to be in place and "form survey" to be posted on site and uploaded on MyPermitNow (MPN). String lines shall be allowed to mark property lines if the geographical layout of the property permits. Portable toilet facilities shall be in place for every two adjacent work sites. Trash/building material containers shall be in place for every two work sites if using a "roll off" type dumpster or, every single work site if using a minimum eight foot by eight foot (8' x 8') plywood box, constructed to withstand its purpose. Safety fence shall be in place when construction site is adjacent to a building completed or near completion. Silt fence shall be in place if deemed necessary for erosion control. Tree protection shall be in place. Address posted, visible from the street.

Temporary Electric Loop
The visual inspection of a temporary power pole or pedestal located at the work site, according to the 2014 National Electrical Code.

Water/Sewer Yard Lines
A visual inspection and testing of the building sewer and water service installed from the structure to the utility taps. This inspection requires proper separation of services and burial depths as required by the 2015 International Codes. Sewer line tests shall consist of a ten foot head (10') of water column above the highest fitting. Backwater valves are required on applications deemed necessary by the 2015 International Codes. Water lines do not need to be connected to the water supply lines within the structure. Water meter boxes/vaults shall be properly installed for proper placement of meter(s). Water meter boxes shall not be damaged or missing. Required backflow devices (non-testable dual check, ex: Watts No. 7) and customer shut-off valves shall be in place. Pressure reducing valves shall be in place, if required.

Plumbing Rough
The visual inspection and testing of proper installation according to the current adopted Plumbing Code (2015 International Codes). This inspection requires an air test of 5 pounds per square inch (5 psi) or a ten foot head (10') of water column above the highest fitting. Plumbing system shall not be buried or covered.

Engineer's Pre-Pour Report (uploaded on MPN)
This inspection is currently being performed by the Engineer of record for said construction. The Engineer's approved inspection report shall be on site and uploaded on MyPermitNow (MPN). A "foundation letter" from the Engineer of record is required to be submitted on MPN prior to the scheduling of Inspection #4.

Pre-Pour Inspection
The visual inspection and testing of the water distribution lines within the foundation of the structure. The test required for this inspection shall maintain a minimum fifty pounds per square inch (50 psi) gauge test. This inspection will be performed AFTER the installation of reinforcing rods and/or cables within the foundation area.

Sheathing
This inspection is a compliance check for the correct exterior sheathing materials as well at the sealing and protection of the exterior envelope prior to any masonry and or lath. At the same time the visual inspection of soffit and covered porches to show compliance of correct framing materials and correct uplift hardware before being covered.

Plumbing Top-Out
Visual inspection and test of the water supply and building drainage system, in accordance with the 2015 International Codes, within the building envelope. The water supply shall maintain a minimum 50 psi gauge test. The DWV shall be water tested above the highest fitting. Tubs/showers shall be tested to the flood rim level and/or overflow drain.

Gas Test (if applicable)
A visual inspection and testing of the gas piping in accordance with the 2015 International Fuel Gas Codes. The inspection requires a minimum 20 psi gauge test with all valves in the open position. Bubble testing shall be required if deemed necessary by the Building Inspector.

Electrical Rough
A visual inspection of the electrical wiring and panel(s) in accordance with the 2014 National Electrical Code.

Mechanical Rough
A visual inspection of the mechanical ducts and equipment in accordance with the 2015 International Mechanical Code.

Frame
A visual inspection of the structural components of the building envelope. The Frame Pack inspection shall be approved prior to the installation of masonry and/or insulation.

Sheetrock
Not currently a required inspection but may be performed if deemed necessary by the Building Inspector. All required fire rated walls shall be inspected by the Building Inspector and/or the Fire Marshal.

Insulation
A visual inspection in accordance with the 2015 International Energy Conservation Codes.

Sidewalk/Driveway Pre-Pour
Please see Detail Sheets attached at the end of these guidelines.

Masonry/Wall Tie Inspection
The visual inspection of exterior wall materials to make sure it meets masonry requirements on first (1st) floor and second (2nd) floor. Correct amount of design features according to the zoning type. Includes wall tie inspection (16 inches on center).

Permanent Power (Meter Release)
A visual inspection in accordance with the 2008 National Electrical Code. All wiring shall be properly terminated or contained within a covered outlet box prior to the issuance of a permanent electric meter. This inspection may be scheduled any time after the installation of electrical trim components. All equipment and panels (including meter can) shall be properly bonded. Panels shall be labeled

2nd Gas (Meter Release)
The visual inspection and testing of the gas piping system prior to the release of the gas meter. The system shall maintain a minimum 20 psi gauge test. All gas stops shall be in place at this time.

Soil Certificate (uploaded on MPN)
A delivery receipt/certificate verifying the soil blend meets the ordinance requirements.

Plumbing Final
Visual inspection and testing of the plumbing system in accordance with the 2015 International Plumbing Code. All properties required to discharge to a private sewage disposal system shall have an approved certificate of completion from the County in which the property is located.

Electric Final
Visual inspection and testing of electrical components in accordance with the 2014 National Electrical Code.

Mechanical Final
Visual inspection and testing of mechanical components in accordance with the 2015 International Mechanical Code. Air conditioning start-up is required.

Landscaping
Visual inspection for compliance with the current City of Leander Landscape Ordinance. All landscaping shall be completed at the time of Building Final. Only hardships occurring during drought seasons may be administered by the Building Official.

Site
Visual inspection for completion of required/necessary components of the property. This shall include, but not limited to, sidewalks, flatwork, site is free of construction debris, etc.

Building Final
Includes visual inspection of the proper completion, allowing for the issuance of a Certificate of Occupancy.

Energy Compliance Testing (uploaded on MPN)
Test reports need to be compliant with the following:

- A completed Envelope Leakage Test Report
- A completed Duct Leakage Test Report

All inspections and fees need to be paid prior to the Utility Department switching users on a utility account.

Common Turndowns

LAYOUT

- Form survey not uploaded on MPN
- Trash receptacle not provided
- Safety fence not provided
- Erosion control not in place
- Portable toilet not provided
- Trees not protected

TEMPORARY ELECTRIC LOOP

- Not supported / secure properly
- Ground termination not to code
- Provide 220 A receptacle
- Receptacle(s) not GFCI protected
- Damaged / needs repair
- Missing / not complete
- Not ready

PLUMBING ROUGH

- Buried/covered, unable to inspect
- Provide 10' head of water or 5 psi air test
- Water test on DWV not holding
- Building drain not sleeved through exterior beam(s)
- Maintain ¼ inch per foot on Branch Lines
- Provide proper bed/fill material
- Clear debris from trench
- Damaged / needs repair
- Missing / not complete
- Not ready

WATER / SEWER YARDLINES

- Separate water and sewer
- Burial depth not to code
- Maintain 1/8 inch per foot
- Provide 10' head on DWV
- Clean trench
- Provide proper bed/fill material
- Pipe not supported properly
- Backflow not installed
- Damaged / needs repair
- Missing / not complete
- Not ready

PRE-POUR

- Air/water test not holding
- Crimped / cut, needs repair
- Unapproved joints in slab
- Copper not sleeved in concrete
- Rough plumbing test not holding
- UFER ground not in place
- Missing / not complete
- Not ready

PLUMBING TOP OUT

- Venting requirements not met
- Water test on DWV not holding
- Air/water test on copper not holding
- Tub drains not open for proper test
- Copper in contact with dissimilar metal
- Gas vents not to code
- Gas test not holding at 20 psi
- Gas piping not protected through masonry
- Pipe not supported or properly secured
- Protect pipe
- Damaged / needs repair
- Missing / not complete
- Not ready

ELECTRICAL ROUGH

- Wire to be in raceway
- Wire damaged, needs repair
- Receptacles spaced greater than 12'
- Nail plates required at studs/plates
- Secure wires in panel
- Aluminum wiring not allowed (per City Ordinance)
- Smoke detector placement not to code
- Stairway lighting not to code
- Wire not supported or properly secured
- Protect wire
- Ground termination not to code
- Missing / not complete
- Not ready

MECHANICAL ROUGH

- Crimped duct
- Duct not properly sealed
- Not supported / secure properly
- Dryer vent not to code
- Vent hood duct not to code
- Exhaust fans not to code
- Plenums not properly sealed
- Combustion air not to code
- Return / supply air too close to gas burning appliance
- Damaged / needs repair
- Missing / not complete
- Not ready

GAS TEST

- Pipe not protected through masonry
- Test not holding at 20 psi
- Damaged / Needs repair
- Not Ready

Common Turndowns

FRAME

- Seal/secure exterior sheathing
- Seal untreated lumber
- Seal/secure exterior penetrations
- Engineered trusses not installed per design
- Provide Engineer's repair detail
- Over cut studs/plates
- Glue/shim headers
- Rafters not to code
- Joist hangers missing
- Double studs where required
- Windows do not meet egress
- Windbrace not to code
- Attic access not to code
- Tempered glass where required
- Stair risers/treads not to code
- Fire block not to code
- Not supported / secure properly
- Masonry requirements not met
- Headers/joists over spanned
- Draft stop not to code
- Provide moisture barrier
- Bottom plates not secured
- Fireplace clearances not met
- Truss hangers / ledgers not to code
- Make site safe and sanitary
- Strap plates / studs
- Nail schedule not to code
- Attic ventilation requirements not met
- Damaged / needs repair
- Missing / not complete
- Not ready

MASONRY

- Incorrect percentage (%) of masonry
- Incorrect number of design features
- Garage standards are not met

SOIL CERTIFICATE

- Soil certificate not uploaded on MPN

PERMANENT POWER

- Wire termination not to code
- Exposed wire
- Fixture / cover plates missing
- Wire not properly secured
- Service equipment not properly bonded

2nd GAS TEST

- Provide 20 psi gauge test
- Gas stub-out not connected to riser
- Damaged pipe / riser
- Not ready

PLUMBING FINAL

- Vent termination not to code
- Paint plumbing vents
- Provide anti-siphon device on hose bibs
- Water heater drain termination not to code
- Water heater not to code
- Drain pan required
- Expansion tank required
- Leak in DWV
- Leak in water supply
- T & P relief not to code
- Gas vents in contact with combustibles
- Copper in contact with dissimilar metal
- Low water pressure
- Water closet / faucets / valves run continuous
- Clean / repair meter box
- Insulate copper
- Private sewage disposal certificate not posted.
- Damaged / needs repair
- Missing / not complete
- Not ready

ELECTRICAL FINAL

- Wire termination not to code
- Smoke detectors not to code
- Smoke detectors beeping or not functioning (low or bad battery)
- ARC fault not to code
- Fixture/cover plates missing
- Stairway illumination not to code
- Wire not properly secured
- Power not on
- Label GFCI's
- Label electrical panel(s)
- Label panel with ground termination locations
- Caulk around exterior devices
- Duplex receptacle not permitted for vent hood
- Wire damaged
- Ground / bond termination not to code
- Provide knock-out plug(s)
- Provide panel cover
- Not ready

MECHANICAL FINAL

- SEER requirements not met
- Programmable thermostat required (Commercial)
- Energy Efficiency requirements not met
- Not supported / secure properly
- Gas vent in contact with combustibles
- Gas vent termination not to code
- Drain pan required

Common Turndowns

MECHANICAL FINAL CONT.

- Condensate drain not to code
- Combustion air not to code
- Dryer vent to code
- Crimped duct
- Raise / level A/C pad
- Protect duct
- Missing / not complete
- Damaged / needs repair
- Not ready

BUILDING FINAL

- Seal/secure exterior penetrations
- Landscape requirements not met
- Flatwork damaged / needs repair
- Clean flatwork
- Clean site/street
- Exterior seal not complete
- Screens missing
- Occupied prior to finals
- Weep holes to be 33” on center
- Maintain 6” clearance from finished floor to grade
- Provide weather strips
- Provide insulation certificate
- Finish yard / grade to drain
- Provide street address
- Provide anti-tip device on range
- Attic access not to code
- Catwalk not to code
- Adjust doors
- Hardware missing
- Provide fire rated attic access
- Address not posted
- Work in progress
- Missing / not complete
- Damaged / needs repair
- Not Ready

Contact Information
City of Leander

Approval of permits by the City of Leander does not exempt you from complying with current or future federal, state, or regional development requirements.

Permits/Building Inspections

- Building Official – Linda Alger
  (512) 528-2746
- Residential Permit Clerk – Laura McFadden
  (512) 528-2815
- Commercial Permit Clerk – Carla Woods
  (512) 528-2823
- Residential Permit Clerk – Stefanie Brown
  (512) 528-2752
- Plan Reviewer – Deborah Slocum
  (512) 528-2885
- Plan Reviewer – Ponciano Morales III
  (512) 528-2985
- Senior Building Inspector – Al Hamilton
  (512) 528-2744
- Senior Building Inspector – Chris Wheat
  (512) 528-2868
- Senior Building Inspector – Mike Wells
  (512) 528-2867
- Senior Building Inspector – Lee Bruno
  (512) 528-2794
- Inspector - Chad McTeer
- (512) 528-2789
- Zoning Compliance Officer – Tonnia Gibbs
  (512) 528-2869

P.O. Box 319, Leander, Texas 78646-0319
(512) 528-2815
permits@leandertx.gov

Fire Department

- Inspection Request Line – for Fire Department Inspections
  (512) 528-2748
- Fire Chief – Bill Gardner
  (512) 528-2848
- Fire Marshal – Joshua Davis
  (512) 528-2847
- Senior Code Enforcement Officer – Julie Dominguez
  (512) 528-2742
- Code Enforcement Officer – Alma Trevino
  (512) 528-2884

Planning and Community Development
(512) 528-2750

Engineering Department
(512) 259-2766

Contact Information
Outside Entities

MyPermitNow (MPN)
(866) 957-3764
https://www.mypermitnow.org

Private Sewage Facility

- Williamson County and Cities Health District Administrative Offices
  (512) 930-3600
- Travis County Septic
  (512) 854-4215

U.S. Department of Energy (ResCheck Form/Information)
www.energycodes.gov

Federal Emergency Management Agency (FEMA)

- Flood Plain Information
  1-800-638-6620

Texas Commission on Environmental Quality (TCEQ), formerly TNRCC

- Drainage Issues
  (512) 239-1000

U.S. Fish & Wildlife Services

- Habitat/Endangered Species and Caves
  (512) 490-4390

Building Permit and Inspection Fees

All permits will have a technology fee/s associated with them.

(1) Residential Permits (New Construction)

Master Plan Review	$50.00 per plan
Plan Review (up to 3000 sq ft)	$50.00 w/o Master - $20 w/ Master (up to 3000 sq ft)
Plan Review (3000 sq ft or greater)	$0.05 per sq ft
Building Permit	$0.15 sq ft (total foundation/floor) ($40 minimum)
Plumbing Permit	$0.15 sq ft (total foundation/floor) ($40 minimum)
Mechanical Permit	$0.15 sq ft (total foundation/floor) ($40 minimum)
Electrical Permit	$0.15 sq ft (total foundation/floor) ($40 minimum)
Temporary Meter Loop	$40.00
Permanent Power	$40.00
Gas Release (If Applicable)	$40.00

(2) Residential Permits (Remodel or Additions)

Plan Review	$50.00
Building Permit	$40.00
Plumbing Permit (If Applicable)	$40.00
Electrical Permit (If Applicable)	$40.00
Temporary Meter Loop (If Applicable)	$40.00
Permanent Power (If Applicable)	$40.00
Mechanical Permit (If Applicable)	$40.00

(3) Manufactured Homes

Plan Review	$50.00
Building Permit	$0.15 per sq ft
Plumbing Permit	$40.00
Electrical Permit	$40.00
Temporary Meter Loop (If Applicable)	$40.00
Permanent Power (If Applicable)	$40.00
Mechanical Permit	$40.00

(4) Commercial Permits (New Construction)

Plan Review	$0.13 per sq ft (up to 10000 sq ft)+$50 per 1000 over
Building Permit	$0.15 per sq ft ($40.00 minimum)
Plumbing Permit	$0.15 per sq ft ($40.00 minimum)
Gas Release (If Applicable)	$40.00
Electrical Permit	$0.15 per sq ft ($40.00 minimum)
Temporary Meter Loop	$40.00
Permanent Power	$40.00
Mechanical Permit	$0.15 per sq ft ($40.00 minimum)
Flatwork	$0.15 per sq ft ($40.00 minimum)
Temporary Certificate of Occupancy	$40.00

(5) Commercial Permits (Remodel)

Plan Review	$0.06 per sq ft
Building Permit	$0.15 sq ft (calculated work area) ($40.00 minimum)
Plumbing Permit	$0.15 sq ft (calculated work area) ($40.00 minimum)
Mechanical Permit	$0.15 sq ft (calculated work area) ($40.00 minimum)

Electrical Permit	$0.15 sq ft (calculated work area) ($40.00 minimum)
Gas Release (If Applicable)	$40.00
Temporary Meter Loop	$40.00
Permanent Power	$40.00
Flatwork	$0.15 per sq ft ($40.00 minimum)
Temporary Certificate of Occupancy	$40.00

(6) Commercial Shell Building

Plan Review	$0.13 per sq ft – 1st 10,000 sq ft + $50 per 1000 sq ft
Building Permit	$0.15 per sq ft ($40.00 minimum)
Plumbing Permit	$0.05 per linear ft of all lines (excluding fire lines)($40 min)
Electrical Permit	$0.10 per sq ft ($40.00 minimum)
Temporary Meter Loop	$40.00
Permanent Power	$40.00
Mechanical Permit (if applicable)	$0.15 per sq ft ($40.00 minimum)
Flatwork	$0.15 per sq ft ($40.00 minimum)

(7) Commercial (New) Lease Space Finish-out

Plan Review	$0.06 per sq ft
Building Permit	$0.15 per sq ft ($40.00 minimum)
Plumbing Permit	$0.10 per sq ft ($40.00 minimum)
Gas Release (If Applicable)	$40.00
Electrical Permit	$0.05 per sq ft ($40.00 minimum)
Temporary Meter Loop	$40.00
Permanent Power	$40.00
Mechanical Permit	$100.00
Coolers / Freezers	$40.00 ea
Flatwork	$0.15 per sq ft ($40.00 minimum)
Temporary Certificate of Occupancy	$40.00

(8) Temporary Construction / Sales Trailer

Plan Review	$20.00
Building Permit	$0.15 per sq ft ($40.00 minimum)
Plumbing Permit	$40.00
Electrical Permit	$40.00
Mechanical Permit	$40.00
Temporary Meter Loop	$40.00

(9) Accessory Structure Permits

(includes garages, storage sheds, workshops, decks, patios, carports, gazebo, and pavilions)

Plan Review	$20.00
Building Permit	$0.15 per sq ft ($40 minimum)
Plumbing Permit (if applicable)	$40.00
Electrical Permit (if applicable)	$40.00

(10) Swimming Pool (Above and In-Ground)

Plan Review	$20.00
Building Permit	$160.00
Electrical Permit	$40.00
Gas Test (if gas heated)	$40.00

(11) Gasoline Storage Permits

Fuel Pumps	$50.00 each
Underground Bulk Storage	$100.00 each

(12) Miscellaneous Building Permits

Water Heater Install / Change out	$40.00
Water Softener Install	$40.00
Demolition Permit	$100.00
Driveway Culvert Permit	$100.00
Plan Review	$20.00
Residential Irrigation plus plan review fee	$50.00
Commercial Irrigation plus plan review fee	$50.00 per backflow device
Sign Permit (including copy changes)	$2.00 per sq ft
Fence Permit	$10.00 (per address)
Garage Sale Permit	No charge
Search Light	$50.00
Structure Move Permit	$55.00
Community Impact Fees	Per Community Impact Fee Ordinance
Tap Fees	Per Water / Wastewater & Tap Fee Ordinance
Water Meter Replacement	$40.00 (plus water meter cost)
Street Cut – Water / Sewer Taps	$750.00 ea
Street Boring / Cut	$100.00 ea
Reinstatement of Expired Permit within 60 days	$40.00
Administration Changes	$25.00
Re-Inspection Fees	$40.00 ea
Outsource Building Plan Review	In accordance with consultant rate, plus City's permit fees

(13) Misc Fees

Soliciting Permit	Per Peddler/Vendor Ordinance
Return Check Fee	$25.00
Technology Fee – Master fee "Parent" on all permits Using MyPermitNow (MPN)	$10.00
Technology Fee – MEP fee "Child" on permits Using MyPermitNow (MPN)	$5.00

NOTES:

1. Double Permit Fees will be charged for any work started before receiving the permit.
2. No new permits will be issued until all permit fees have been paid.
3. A Stop Work Order will be issued on all permits where re-inspection fees of $300 or more are owed.
4. All fees must be paid current before the final inspection is performed.

Fire Code Permit and Inspection Fees

(1) Plan Reviews	Base	Criteria
New Construction	$100.00	Add $0.10 per Sqft
New Building- Shell Only	$100.00	Add $0.05 per Sqft
Remodel / Repair	$100.00	
New Construction- Tenant Finish Out	$100.00	Add $0.05 per Sqft
Fire Sprinkler System Review		
< 6000 Sqft	$100.00	
6001- 12000 Sqft	$200.00	
> 12000 Sqft	$300.00	Add $0.01 per Sqft > 12000 (Max. fee $600)
Fire Sprinkler Remodel > 20 Heads	$100.00	
Fire Alarm Review		
< 200 devices	$100.00	
> 201 devices	$150.00	Add $0.50 per additional device
Alternative Fire Suppression Review	$100.00	
Subdivision Plats (Preliminary and Final)	$125.00	Per section / phase
Site Development Plans	$125.00	Per section / phase

(2) Acceptance Testing	Base	Criteria
Certificate of Occupancy Inspection < 10,000 Sqft	$50.00	
Certificate of Occupancy Inspection > 10,000 Sqft	$100.00	
Fire Line Visual / Hydrostatic	$80.00	Per visit
Fire Sprinkler Visual / Hydrostatic		
< 20 heads	$100.00	
> 20 heads	$150.00	
Natural Gas Systems	$80.00	
Alternative Fire Suppression	$50.00	Per system
Above / Below Ground Storage Tank	$150.00	Per visit
Fuel Line Pressure Test	$100.00	Per visit
Fire Alarm System		
< 200 devices	$100.00	
> 201 devices	$150.00	Add $0.50 per additional device
Other Fire Code Related Tests	$80.00	

(3) Fire Code Permits	Base	Criteria
Explosive Permits (1.5 & 1.6)	$80.00	Per permit
Explosive Permits (1.4)	$150.00	Per permit
Explosive Permits (1.3)	$200.00	Per permit
Explosive Permits (1.1 & 1.2)	$400.00	Per permit
Fireworks Display	$100.00	
Temporary Membrane Structures / Tents		
200- 400 Sqft	$50.00	Per tent
> 401 Sqft	$50.00	Per tent- Add $0.10 per Sqft
Cutting / Welding Shops	$80.00	
Dry Cleaning Facilities	$100.00	
Hazardous Materials	$150.00	Based on quantity
Lumberyard / Woodworking	$80.00	
Repair Garages / Service Stations	$80.00	
Spraying / Dipping	$100.00	
Other Fire Permits as Required by Fire Code	$80.00	
Mass Gathering > 1000 people	$200.00	Additional fees for personnel/equipment

(4) Annual Inspections	Base	Criteria
Daycare Annual		
< 25 Children	$50.00	
> 26 Children	$100.00	
Registered Family Home	$100.00	
Healthcare Assisted Living	$120.00	Add $1.00 per bed
Hospital / Licensed Clinic	$160.00	Add $1.00 per bed
Home Foster Care	$40.00	

(5) Re-Inspections		
First Re- Inspection	$0.00	** Inspections that require a fee before scheduling are limited to one failure before assessment of re-inspection fees. Upon failure of fourth inspection, submitting party must re-submit and pay all applicable fees associated with the project or inspection.

Section 3. Amendment of Section 3.115, Chapter 3, Code of Ordinances. Section 3.115(d) is hereby amended in its entirety to read as follows:

> (d) Any person who shall occupy or shall authorize another person to occupy a building, or any part thereof, without having received a certificate of occupancy in compliance with herewith, within the city limits shall be deemed guilty of an offense and shall be liable for a fine in accordance with the general penalty provision set forth in Section 1.109 of this code. Each day the violation exists shall constitute a separate offense. Such penalty shall be in addition to all the other remedies provided herein. A person in violation of this Chapter as described in this subsection shall also be liable for an administrative penalty of $100.00 per calendar day that the violation occurs. The City Manager shall conduct a hearing, of which notice shall be given to the person, to determine whether the person is in violation and shall assess the administrative penalty. The City Manager shall make his/her decision on the preponderance of the evidence presented. The person may appeal the City Manager's decision to the municipal court of the City by submitting a written notice of appeal to the City Manager within fifteen days of the City Manager's decision.

Section 4. Conflicting Ordinances. Article 3.000 of Appendix A and Section 3.115(d) of Chapter 3 of the Leander Code of Ordinances are hereby amended in their entirety as provided in this Ordinance. Article 3.000, Appendix A and Section 3.115(d), Chapter 3 of the Leander Code of Ordinances and all ordinances or parts thereof conflicting or inconsistent with the provisions of this ordinance as adopted and amended herein, are hereby amended to the extent of such conflict. In the event of a conflict or inconsistency between this ordinance and any other code or ordinance of the city, the terms and provisions of this ordinance shall govern.

ZONING COMPLIANCE OFFICER INSPECTIONS

This provisions apply to properties that comply with the old landscape, garage setback, and masonry requirements as listed on the attached spreadsheet.

LANDSCAPING

1. Each single-family or two-family lot shall have the following planted in the front yard (front property line to the front 2 corners of the structure):
   a. 2 – 2 caliper inch significant trees (oak, elm, pecan, walnut, hickory, cherry, cypress, redbud, or other species from the Grow Green Guide) measured at 18" above finished grade after planting;
      - 1 – 3½ caliper inch may be substituted for 2 – 2 caliper inch trees
      - Existing trees can qualify if they are considered significant trees (not cedars, hackberry, etc).
   b. 3 – 1 gallon shrubs;
   c. 3 – 5 gallon shrubs; and
   d. Turf grass in the front yard.

2. No landscaping over 3 feet in height shall be planted within 40 feet of the intersection of any street pavement.

3. Soil Depth: All new landscapes are required to have a minimum of 6 inches of soil depth in areas planted with turf grass.

MASONRY

1. Properties zoned with the Type A Architectural Component:
   a. Required to have 85% masonry on all stories; and
   b. 5 design features
      - Examples: horizontal off-sets, recesses or projections, porches, breezeways, porte-cocheres, courtyards, awnings, canopies, alcoves, recessed entries, ornamental cornices, display or other ornamental windows, vertical "elevation" off-sets, peaked roof forms, arches, outdoor patios, architectural details such as tile work or moldings integrated into the façade, integrated planters or wing walls, accent materials, varied roof heights, premium roofing materials such as tile or standing seam metal, or similar design features approved by the Director of Planning.

2. Properties zoned with the Type B Architectural Component:
   a. Required to have 85% masonry on the 1st floor and 50% on the second and above.
   b. 4 design features
      - Examples: horizontal off-sets, recesses or projections, porches, breezeways, porte-cocheres, courtyards, awnings, canopies, alcoves, recessed entries, ornamental cornices, display or other ornamental windows, vertical "elevation" off-sets, peaked roof forms, arches, outdoor patios, architectural details such as tile work or moldings integrated into the façade, integrated planters or wing walls, accent materials, varied roof heights, premium roofing materials such as tile or standing seam metal, or similar design features approved by the Director of Planning.

3. Masonry includes brick, stone, or stucco.

4. All window trim shall be cementious-fiber or similar product (not wood).

DRIVEWAYS & SIDEWALKS

1. Confirm the sidewalks and driveways have been installed and are not cracked or damaged.

ZONING COMPLIANCE OFFICER INSPECTIONS

This provisions apply to properties that comply with the new landscape, garage setback, and masonry requirements as listed on the attached spreadsheet.

LANDSCAPING

1. Each single-family or two-family lot shall have the following planted in the front yard (front property line to the front 2 corners of the structure):
    a. 2 – 2 caliper inch significant trees (oak, elm, pecan, walnut, hickory, cherry, cypress, redbud, or other species from the Grow Green Guide) measured at 18" above finished grade after planting;
        - 1 – 3½ caliper inch may be substituted for 2 – 2 caliper inch trees
        - Existing trees can qualify if they are considered significant trees (not cedars, hackberry, etc).
    b. 3 – 1 gallon shrubs;
    c. 3 – 5 gallon shrubs; and
    d. Turf grass in the front yard shall be limited to 2/3 of the lot after subtracting the impervious cover.
        - Alternative materials can include native and adaptive landscape plants listed in the Grow Green Guide, mulch, crushed granite, or similar material. No more than 50% of the lot may consist of non-plant material.

2. No landscaping over 3 feet in height shall be planted within 40 feet of the intersection of any street pavement.

3. Soil Depth: All new landscapes are required to have a minimum of 6 inches of soil depth in areas planted with turf grass.

4. A non-disturbance zone shall be maintained on single-family and two-family lots. A disturbance area no more than 5 feet from the foundation necessary for construction and grade transitions shall be permitted. This disturbance area shall be no more than 10 feet from the foundation for properties zoned with the SFR (Single-Family Rural) use component. The trees located on the remainder of the lot shall not be removed unless a unique situation is approved by the Planning Director.

MASONRY

1. Properties zoned with the Type A Architectural Component:
    a. Required to have 85% masonry on all stories; and
    b. 5 design features
        - Examples: horizontal off-sets, recesses or projections, porches, breezeways, porte-cocheres, courtyards, awnings, canopies, alcoves, recessed entries, ornamental cornices, display or other ornamental windows, vertical "elevation" off-sets, peaked roof forms, arches, outdoor patios, architectural details such as tile work or moldings integrated into the façade, integrated planters or wing walls, accent materials, varied roof heights, premium roofing materials such as tile or standing seam metal, or similar design features approved by the Director of Planning.

2. Properties zoned with the Type B Architectural Component:
    a. Required to have 85% masonry on the 1st floor and 50% on the second and above.
    b. 4 design features
        - Examples: horizontal off-sets, recesses or projections, porches, breezeways, porte-cocheres, courtyards, awnings, canopies, alcoves, recessed entries, ornamental cornices, display or other ornamental windows, vertical "elevation" off-sets, peaked roof forms, arches, outdoor patios, architectural details such as tile work or moldings integrated into the façade, integrated planters or wing walls, accent materials, varied roof heights, premium roofing materials such as tile or

standing seam metal, or similar design features approved by the Director of Planning.

3. Masonry includes brick, stone, or stucco.

4. All window trim shall be cementious-fiber or similar product (not wood).

5. Garage Standards:
   a. If the building permit indicates that architectural features are required for compliance with the garage standards, the following are required:
      - Architectural garage doors that are painted to match the color scheme of the house and include decorative hardware; or
      - Doors that have a natural wood appearance; and
      - Both items above must also be combined with at least one of the following features:
        (i) a garage door recess of at least 2 feet;
        (ii) a roof overhang over the garage doors with supporting architectural columns that extends at least 2 feet in front of the garage doors; or
        (iii) any similar architectural feature, approved by the Planning Director, that diminishes the prominence of the garage doors on the street-facing building facade.

DRIVEWAYS & SIDEWALKS

1. Confirm the sidewalks and driveways have been installed and are not cracked or damaged.

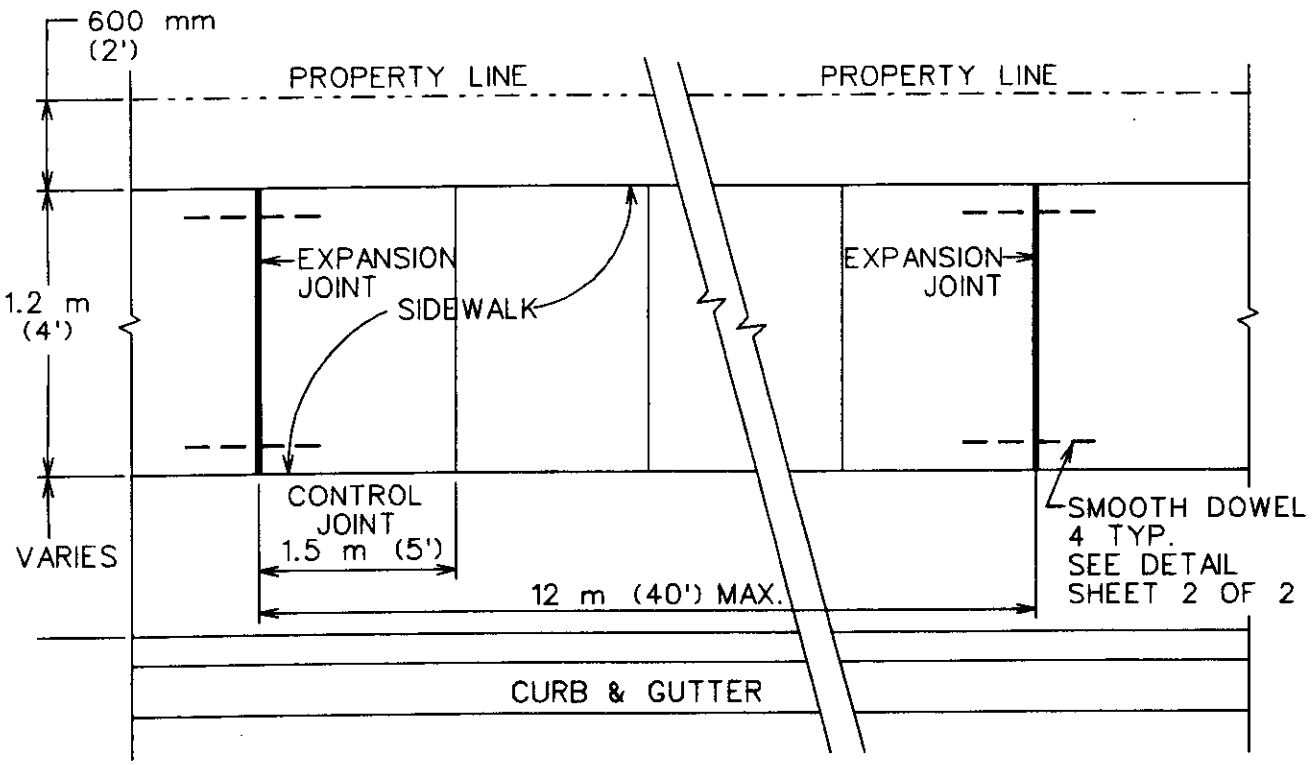

PLAN

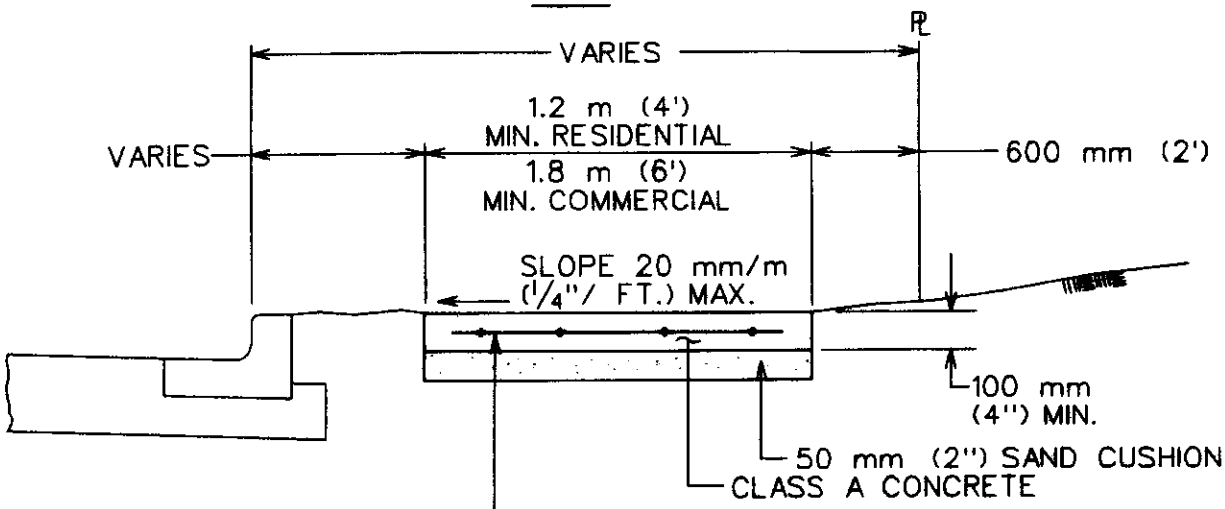

POLYPROPYLENE FIBRILLATED FIBERS, OR 150 mm X 150 mm X MW9 X MW9 (6" X 6" X W1.4 X W1.4) WELDED WIRE FABRIC OR ONE LAYER 10M (#3) BARS PLACED NOT MORE THAN 450 mm (18") C.C. BOTH DIRECTIONS.
REINFORCEMENT SHALL ACCURATELY PLACED AT SLAB MID-DEPTH AND HELD FIRMLY IN PLACE BY MEANS OF BAR SUPPORTS OF ADEQUATE STRENGTH AND NUMBER THAT WILL PREVENT DISPLACEMENT AND KEEP THE STEEL AT ITS PROPER POSITION DURING THE PLACEMENT OF THE P.C. CONCRETE. IN NO INSTANCE SHALL THE STEEL BE PLACED DIRECTLY ON THE SUBGRADE OR SAND CUSHION LAYER.

SECTION

CITY OF AUSTIN DEPARTMENT OF PUBLIC WORKS	SIDEWALK	
Bill Gardner 3/26/08 ADOPTED	THE ARCHITECT/ENGINEER ASSUMES RESPONSIBILITY FOR APPROPRIATE USE OF THIS STANDARD.	STANDARD NO. 432S-1 1 OF 3

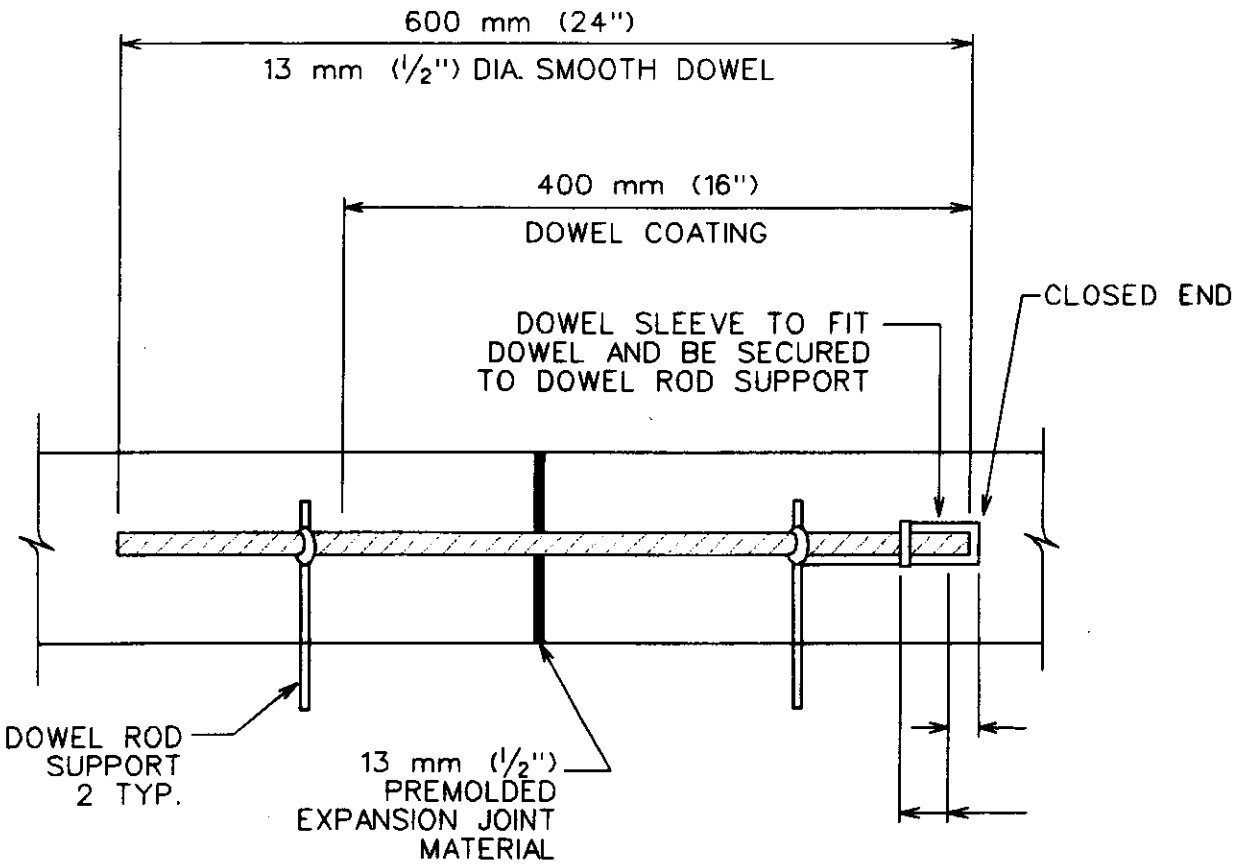

DOWEL DETAIL

CITY OF AUSTIN DEPARTMENT OF PUBLIC WORKS	SIDEWALK	
Bill Gardner 3/26/08 ADOPTED	THE ARCHITECT/ENGINEER ASSUMES RESPONSIBILITY FOR APPROPRIATE USE OF THIS STANDARD.	STANDARD NO. 432S-1 2 OF 3

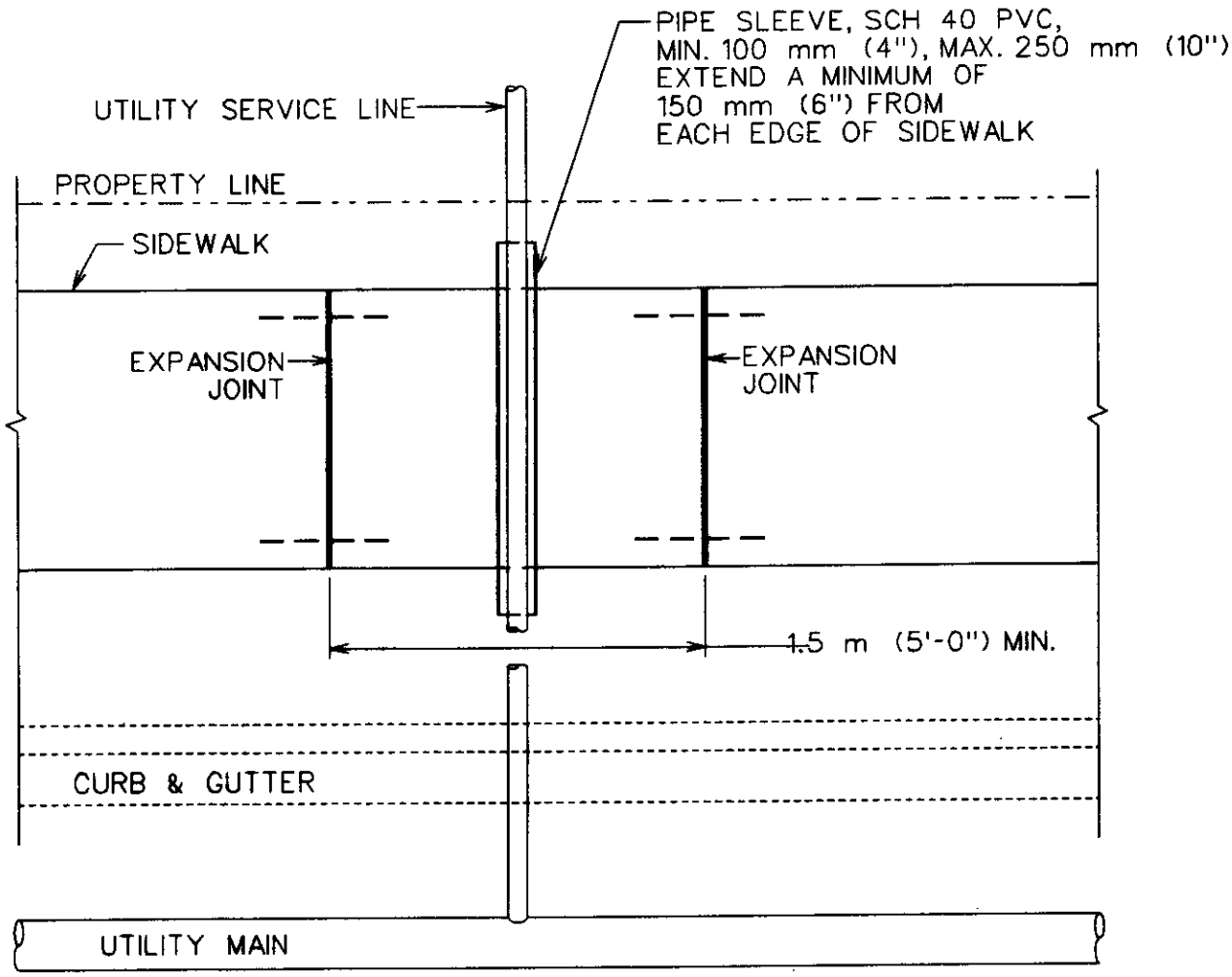

SIDEWALK OVER UTILITY SERVICE LINE PLAN

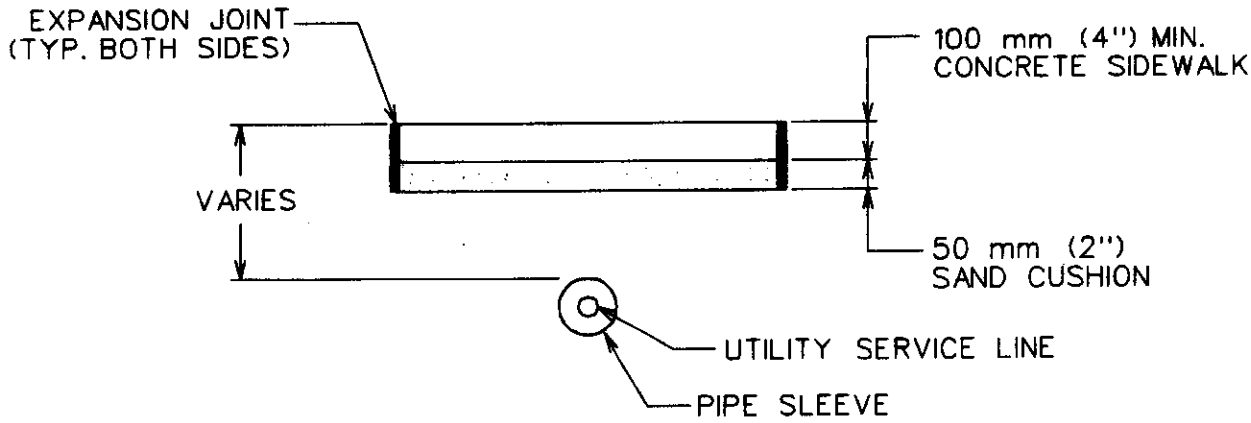

SECTION OF SIDEWALK OVER
UTILITY SERVICE LINES

NOTES:
1. THIS STANDARD APPLIES TO THE INSTALLATION OF NEW UTILITIES OR UTILITIES BEING REPLACED BY A NEW LINE.
2. NO JOINTS IN UTILITY SERVICE PIPE TO BE LOCATED INSIDE PVC PIPE SLEEVE.

CITY OF AUSTIN DEPARTMENT OF PUBLIC WORKS	SIDEWALK	
Bill Gardner 3/26/08 ADOPTED	THE ARCHITECT/ENGINEER ASSUMES RESPONSIBILITY FOR APPROPRIATE USE OF THIS STANDARD.	STANDARD NO. 432S-1 3 OF 3

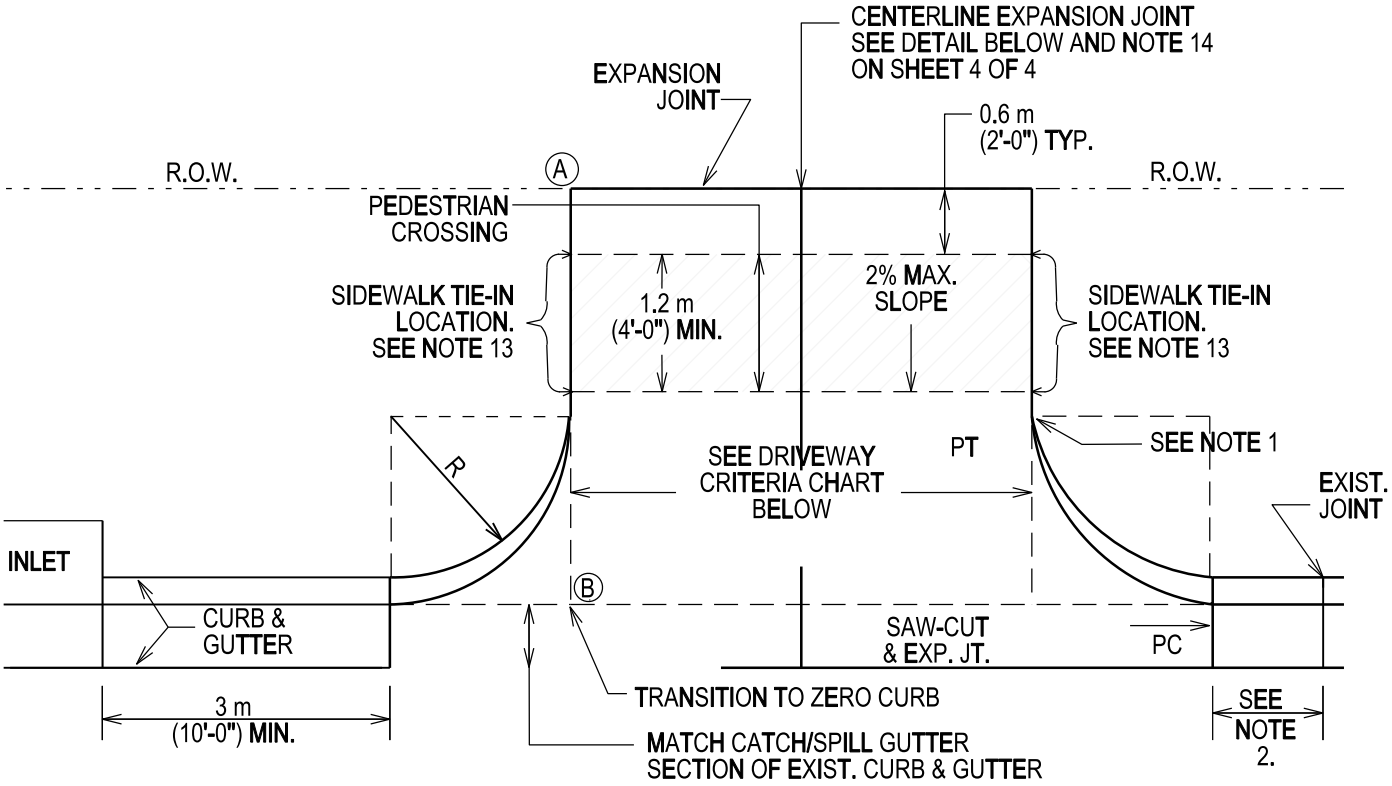

PLAN

NOTE: ALL DRIVEWAYS SHALL BE SLOPED TOWARDS THE STREET FROM THE R.O.W. LINE. ELEVATION OF POINT Ⓐ ABOVE POINT Ⓑ IS, TYPICALLY A MINIMUM OF 150 mm (6") PLUS 20 mm/m ($\frac{1}{4}$" RISE/FOOT) OVER DISTANCE "X" IN METERS (FEET).

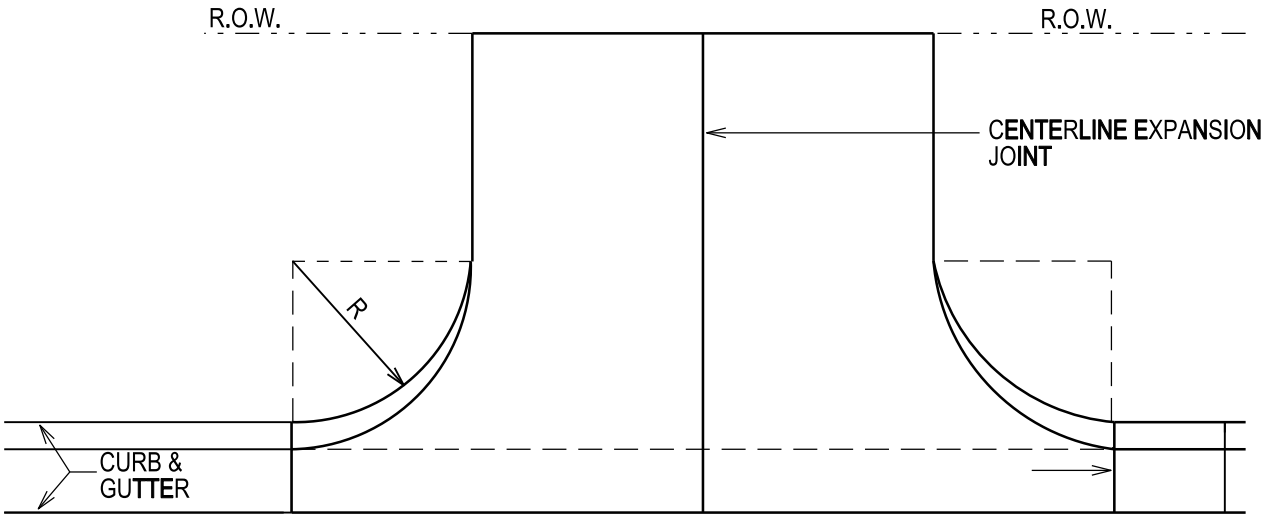

PLAN

CITY OF AUSTIN DEPARTMENT OF PUBLIC WORKS	TYPE I DRIVEWAY (1 & 2 FAMILY RESIDENTIAL USE ONLY)	
RECORD COPY SIGNED BY SAM ANGOORI — *10/19/09* ADOPTED	THE ARCHITECT/ENGINEER ASSUMES RESPONSIBILITY FOR APPROPRIATE USE OF THIS STANDARD.	STANDARD NO. 433S-1 1 OF 4

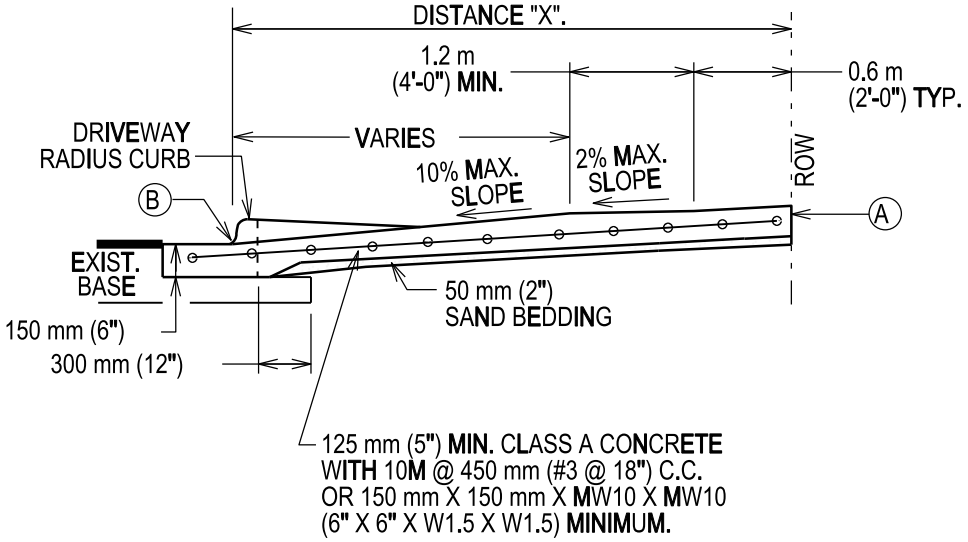

125 mm (5") MIN. CLASS A CONCRETE WITH 10M @ 450 mm (#3 @ 18") C.C. OR 150 mm X 150 mm X MW10 X MW10 (6" X 6" X W1.5 X W1.5) MINIMUM.

REINFORCEMENT SHALL ACCURATELY PLACED AT SLAB MID-DEPTH AND HELD FIRMLY IN PLACE BY MEANS OF BAR SUPPORTS OF ADEQUATE STRENGTH AND NUMBER THAT WILL PREVENT DISPLACEMENT AND KEEP THE STEEL AT ITS PROPER POSITION DURING THE PLACEMENT OF THE P.C. CONCRETE. IN NO INSTANCE SHALL THE STEEL BE PLACED DIRECTLY ON THE SUBGRADE OR SAND CUSHION LAYER.

CROSS SECTION

CITY OF AUSTIN DEPARTMENT OF PUBLIC WORKS		TYPE I DRIVEWAY (1 & 2 FAMILY RESIDENTIAL USE ONLY)	
RECORD COPY SIGNED BY SAM ANGOORI	*10/19/09* ADOPTED	THE ARCHITECT/ENGINEER ASSUMES RESPONSIBILITY FOR APPROPRIATE USE OF THIS STANDARD.	STANDARD NO. 433S-1 2 OF 4

DRIVEWAY CRITERIA	WIDTH METERS (FEET)		
USE	MIN.	*OPT.	MAX.
SIN. FAMILY	3.66 (12)	5.50 (18)	11.80 (25)
DUPLEX	4.56 (15)	5.50 (18)	11.80 (25)
TOWN HOME	4.56 (15)	5.50 (18)	11.80 (25)

*OPTIMUM

RADIUS DIMENSION METERS (FEET)			
USE	MIN.	*OPT.	MAX.
SINGLE FAMILY	1.5 (5)	1.5 (5)	3.0 (10)
DUPLEX	1.5 (5)	2.4 (8)	3.0 (10)
TOWN HOME	1.5 (5)	2.4 (8)	3.0 (10)

*OPTIMUM

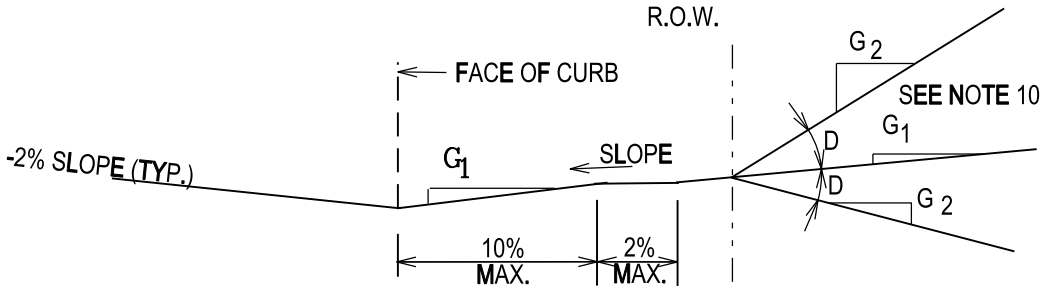

ALLOWABLE GRADES

CITY OF AUSTIN DEPARTMENT OF PUBLIC WORKS		TYPE I DRIVEWAY (1 & 2 FAMILY RESIDENTIAL USE ONLY)	
RECORD COPY SIGNED BY SAM ANGOORI	*10/19/09* ADOPTED	THE ARCHITECT/ENGINEER ASSUMES RESPONSIBILITY FOR APPROPRIATE USE OF THIS STANDARD.	STANDARD NO. 433S-1 3 OF 4

NOTES:

1. "ZERO" CURB AT PT OR SIDEWALK EDGE, WHICHEVER IS ENCOUNTERED FIRST. THE DRIVEWAY EDGE SHALL BE SMOOTHLY TRANSITIONED INTO THE SIDEWALK BEGINNING AT THE RADIUS PC LINE.

2. IF DIMENSION IS LESS THAN 1.5 METERS (5 FEET), REMOVE CURB AND GUTTER TO EXISTING JOINT AND POUR MONOLITHICALLY WITH THE DRIVEWAY.

3. IF THE BASE IS OVER EXCAVATED WHERE THE CURB AND GUTTER WAS REMOVED, BACKFILL WITH CONCRETE MONOLITHICALLY WITH THE DRIVEWAY.

4. ALL DRIVEWAYS MUST BE CONSTRUCTED WITHIN THE STREET FRONTAGE OF THE SUBJECT PROPERTY AS DETERMINED BY EXTENDING THE SIDE PROPERTY LINES TO THE CURB.

5. DRIVEWAYS SHALL NOT EXCEED 70% OF A LOTS' STREET FRONTAGE.

6. TYPE I DRIVEWAYS ARE TO BE LOCATED NO CLOSER TO THE CORNER OF INTER-SECTING RIGHTS-OF-WAY THAN 60% OF PARCEL FRONTAGE OR 15 METERS (50 FEET); WHICHEVER IS LESS.

7. DRIVEWAYS SHALL NOT BE CONSTRUCTED WITHIN THE CURB RETURN OF A STREET INTERSECTION.

8. SINGLE FAMILY LOTS LIMITED TO ONE DRIVEWAY EXCEPT FOR APPROVED SEMICIRCULAR DRIVES.

9. WHEN TWO DRIVEWAYS ARE USED (0NE PER UNIT; TWO MAXIMUM) FOR DUPLEXES AND TOWN HOMES, SINGLE FAMILY STANDARDS SHALL APPLY.

10. WHILE THE PROPERTY OWNER REMAINS RESPONSIBLE FOR GRADE BREAKS WITHIN PRIVATE PROPERTY, THE FIRE DEPARTMENT SHOULD BE CONSULTED WHERE THE DRIVEWAY IS ESSENTIAL TO EMERGENCY VEHICLE ACCESS AND "G2" IS GREATER THAN 15%. "G1" PLUS "D" SHOULD NOT EXCEED 15%.

11. SEE TRANSPORTATION MANUAL SECTION 5 FOR OTHER DRIVEWAY REQUIREMENTS.

12. USE 12 mm ($\frac{1}{2}$") ASPHALT BOARD, OR OTHER APPROVED MATERIAL, FOR CURB AND GUTTER EXPANSION JOINTS.

13. THE SIDEWALK, REGARDLESS OF ITS LOCATION WITH RESPECT TO THE CURB OR PROPERTY LINE, SHALL BE CONNECTED TO THE DRIVEWAY AT THESE LOCATIONS.

14. PLACE AN EXPANSION JOINT DOWN THE CENTER OF ALL DRIVEWAYS.

15. WATER METER BOXES AND WASTEWATER CLEAN OUTS ARE PROHIBITED FROM BEING LOCATED IN DRIVEWAY AREAS.

CITY OF AUSTIN DEPARTMENT OF PUBLIC WORKS		TYPE I DRIVEWAY (1 & 2 FAMILY RESIDENTIAL USE ONLY)	
RECORD COPY SIGNED BY SAM ANGOORI	*10/19/09* ADOPTED	THE ARCHITECT/ENGINEER ASSUMES RESPONSIBILITY FOR APPROPRIATE USE OF THIS STANDARD.	STANDARD NO. 433S-1 4 OF 4

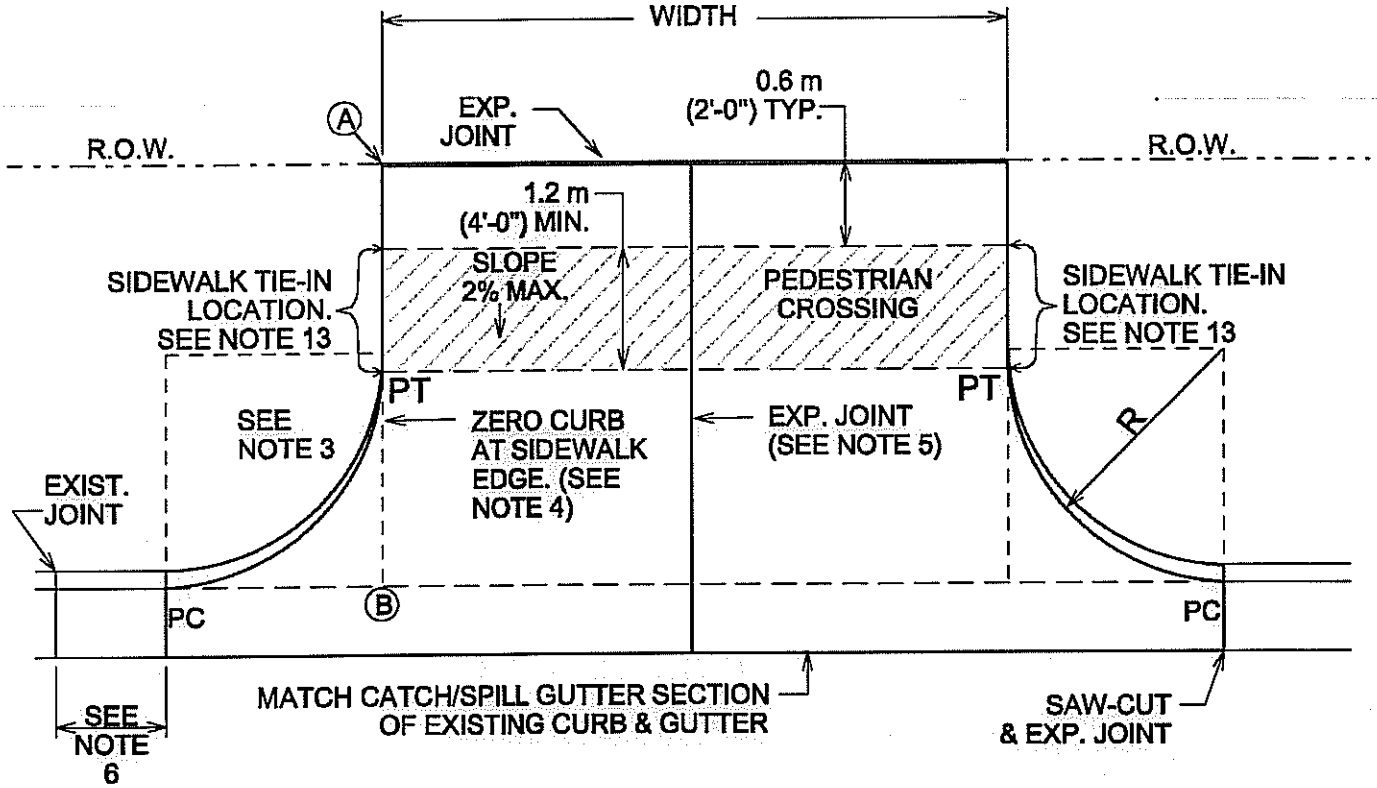

PLAN

NOTE: ALL DRIVEWAYS SHALL BE SLOPED TOWARDS THE STREET FROM THE R.O.W. LINE. ELEVATION OF POINT (A) ABOVE POINT (B) IS, TYPICALLY A MINIMUM OF 150 mm (6") PLUS 20 mm/m ($\frac{1}{4}$" RISE/FOOT) OVER DISTANCE "X" IN METERS (FEET).

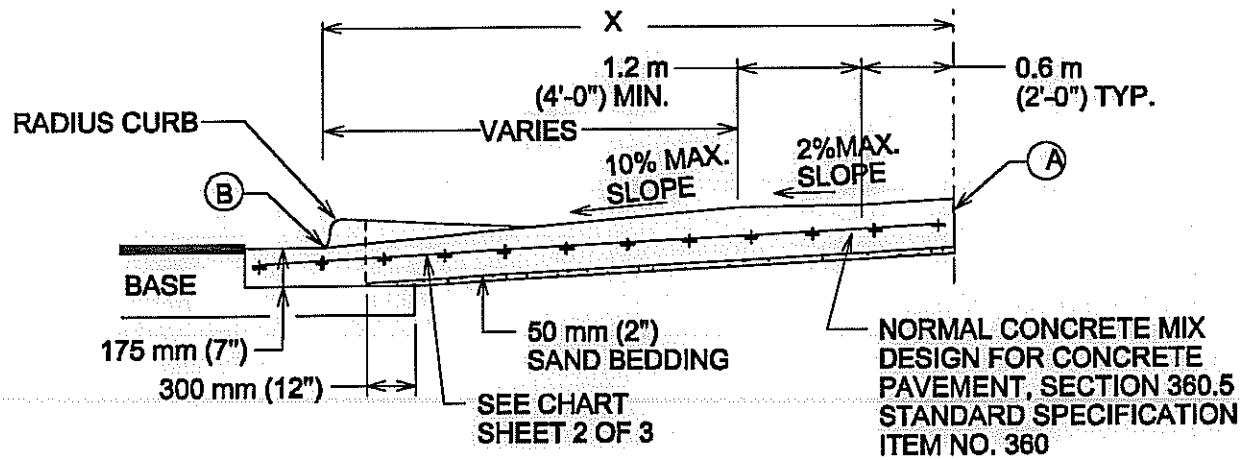

CROSS SECTION

CITY OF AUSTIN DEPARTMENT OF PUBLIC WORKS	TYPE II DRIVEWAY	
2/24/16 ADOPTED	THE ARCHITECT/ENGINEER ASSUMES RESPONSIBILITY FOR APPROPRIATE USE OF THIS STANDARD.	STANDARD NO. 433S-2 1 OF 2

USE	THICKNESS	REINFORCEMENT
DRIVEWAYS FOR PASSENGER VEHICLE PARKING LOTS	150 mm (6") MIN.	125 mm (5") MIN. CONCRETE WITH ONE LAYER OF13M (#4) BARS PLACED ON CHAIRS AT MIDDEPTH OF SLAB AT NO MORE THAN 450 mm (18") O.C. BOTH DIRECTIONS
ALL OTHERS	175 mm (7") MIN.	125 mm (5") MIN. CONCRETE WITH ONE LAYER OF13M (#4) BARS PLACED ON CHAIRS AT MIDDEPTH OF SLAB AT NO MORE THAN 450 mm (18") O.C. BOTH DIRECTIONS

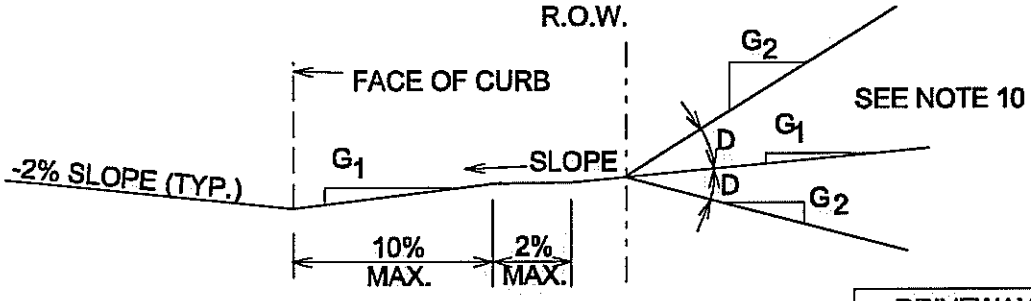

DRIVEWAY VOLUME (ADT)	D=GRADE CHANGE	
	STD.	MAX
>1500	0%	3%
500-1500	3%	6%
<500	6%	15%

ALLOWABLE GRADES

NOTES:

1. ALL TYPE II DRIVEWAYS SHALL HAVE RADIUS ENDS.
2. DRIVEWAY WIDTHS AND RADII DIMENSIONS, ONE/TWO WAY TRAVEL REQUIREMENTS, AND GEOMETRIC LAY-OUT ARE HIGHLY VARIABLE, SUBJECT TO SITE SPECIFIC CONDITIONS AND REQUIREMENTS. SEE TRANSPORTATION CRITERIA MANUAL. SECTION 5 "DRIVEWAYS".
3. THE DRIVEWAY EDGE SHALL BE SMOOTHLY TRANSITITIONED INTO THE SIDEWALK TIE-IN LOCATION BEGINNING AT THE RADIUS PC LINE.
4. "ZERO" CURB AT PT OR SIDEWALK EDGE, WHICHEVER IS ENCOUNTERED FIRST.
5. PLACE AN EXPANSION JOINT DOWN THE CENTER OF DRIVEWAY ALL DRIVEWAYS.
6. IF DIMENSION IS LESS THAN 1.5 METERS (5 FEET), REMOVE CURB AND GUTTER TO EXISTING JOINT AND POUR MONOLITHICALLY WITH DRIVEWAY.
7. IF THE BASE IS OVER-EXCAVATED WHERE THE CURB AND GUTTER WERE REMOVED, BACKFILL WITH CONCRETE MONOLITHICALLY WITH THE DRIVEWAY.
8. TYPE II DRIVEWAYS ARE TO BE LOCATED NO CLOSER TO THE CORNER OF INTERSECTING RIGHT OF WAY THAN 60% OF PARCEL FRONTAGE AT 30 METERS (100 FEET): WHICHEVER IS LESS.
9. DRIVEWAY SHALL NOT BE CONSTRUCTED WITHIN THE CURB RETURN OF A STREET INTERSECTION.
10. WHILE THE PROPERTY OWNER REMAINS RESPONSIBLE FOR GRADE BREAKS WITHIN PRIVATE PROPERTY, THE FIRE DEPARTMENT SHALL BE CONSULTED WHERE THE DRIVEWAY IS ESSENTIAL TO EMERGENCY VEHICLE ACCESS AND "G2 IS GREATER THAN 15%.
11. USE 12 MM (1/2") ASPHALT BOARD OR OTHER APPROVED MATERIAL FOR CURB AND GUTTER EXPANSION JOINTS, SIDEWALK, AT THE R.O.W. LINE AND AT MIDWIDTH, SEE NOTE 5.
12. SEE TRANSPORTATION CRITERIA MANUAL, SECTION 5 FOR OTHER DRIVEWAY REQUIREMENTS.
13. THE SIDEWALK, REGARDLESS OF ITS LOCATION WITH RESPECT TO THE CURB OR PROPERTY LINE, SHALL BE CONNECTED TO THE DRIVEWAY AT THESE LOCATIONS.
14. WATER METER BOXES AND WASTEWATER CLEAN OUTS ARE PROHIBITED FROM BEING LOCATED IN DRIVEWAY AREAS.

CITY OF AUSTIN DEPARTMENT OF PUBLIC WORKS	TYPE II DRIVEWAY	
2/24/10 ADOPTED	THE ARCHITECT/ENGINEER ASSUMES RESPONSIBILITY FOR APPROPRIATE USE OF THIS STANDARD.	STANDARD NO. 433S-2 2 OF 2