CRYSTAL FALLS WEST - SECTION 1

WATER RECLAMATION PLANT
OFFSITE LIFT STATION #16

RECLAIMED WATER PUMP STATION

FOR

THE LOOKOUT GROUP, INC.

DECEMBER 2012

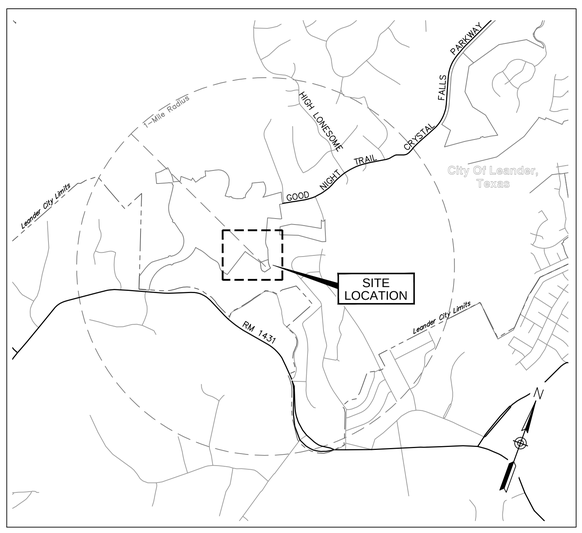

LOCATION MAP

scale: 1"=2000'

OWNER:
Lookout Partners, L.P.
2370 Rice Blvd., Suite 200
Houston, Texas 77005
Phone: (713) 524-5263
Fax: (713) 524-2807

DEVELOPER:
The Lookout Group
2370 Rice Blvd., Suite 200
Houston, Texas 77005
Phone: (713) 524-5263
Fax: (713) 524-2807

ENGINEER:
Jay Engineering Co., Inc.
P.O Box 1220
Leander, Texas 78764.1220
Phone: (512) 259-3882
Fax: (512) 259-8016

SURVEYOR:
G & R Surveying, LLC
1805 Ouida Drive
Austin, Texas 78728
Phone: (512) 267-7430
Fax: (512) 836-8385

THE LOOKOUT GROUP

INDEX TO DRAWINGS

G.1.0 COVER SHEET & LOCATION MAP
G.2.0 SITE LAYOUT AND KEY MAP
G.3.0 GENERAL CONSTRUCTION NOTES
G.4.0 EROSION & SEDIMENTATION CONTROL PLAN

C.1.0 SITE GRADING
C.2.0 DRIVEWAY PLAN & PROFILE
C.2.1-C.2.2 WRP ACCESS ROAD PLAN & PROFILE
C.2.3 WRP ACCESS ROAD SS PLAN & PROFILE
C.3.0 SITE PLAN
C.4.0 SITE DETAILS
C.5.0 PROCESS DIAGRAM & HYDRAULIC PROFILE
C.6.0 YARD PIPING PLAN
C.7.0 EQUIPMENT PLAN
C.8.0 TREATMENT MODULE SECTIONS & DETAILS
C.9.0 TREATMENT MODULE SECTIONS & DETAILS
C.10.0 CHEMICAL FEED & BULK STORAGE SYSTEM DETAILS
C.11.0 FILTER DETAILS
C.12.0 FILTER DETAILS
C.13.0 FILTER DETAILS
C.14.0 FILTER DETAILS
C.15.0 OUTFALL PLAN & PROFILE
C.16.0 ON-SITE LIFT STATION PLAN & PROFILE
C.17.0 LAB/MCC BUILDING & ELEVATIONS
C.18.0 BLOWER SHELTER PLAN & ELEVATIONS
C.19.0 MISC. CONSTRUCTION DETAILS
C.20.0 MISC. CONSTRUCTION DETAILS

S.1.0 STRUCTURAL NOTES & TYPICAL DETAILS
S.2.0 STRUCTURAL NOTES, ABBREVIATIONS & TYPICAL DETAILS
S.3.0 OVERALL PLANT SITE PLAN
S.4.0 PLANT FOUNDATION PLAN
S.5.0 WALL SECTIONS & DETAILS
S.6.0 MECHANICAL FOUNDATION, ROOF FRAMING PLANS & DETAILS
S.7.0 SECTIONS & DETAILS

E.1.0 ELECTRICAL SITE PLAN
E.2.0 LIFT STATION ELECTRICAL POWER DIAGRAM
E.3.0 LIFT STATION ELECTRICAL SCHEMATIC & PUMP CONTROL SCHEMATIC
E.4.0 LIFT STATION PUMP CONTROL PANEL, SHELTER & DETAILS
E.5.0 MCC ELECTRICAL ONE-LINE DIAGRAM
E.6.0 MCC ELECTRICAL CONTROL SCHEMATICS
E.7.0 ELECTRICAL POWER, LIGHTING CIRCUITS
E.8.0 EMERGENCY GENERATOR DETAILS
E.9.0 ELECTRICAL LEGEND & KEY SHEET

OSLS.1.0 LIFT STA #16 DRIVE, SITE GRADING & EROSION CONTROL PLAN
OSLS.2.0 LIFT STA #16 SITE & ELEC. SITE PLAN
OSLS.3.0 LIFT STA #16 PLAN & PROFILE
OSLS.4.0 LIFT STA #16 POWER DIAGRAM
OSLS.5.0 LIFT STA #16 ELECTRICAL SCHEMATIC
OSLS.6.0 LIFT STA #16 PUMP CONTROL PANEL & SHELTER

IP.1.0 IRRIGATION POND LAYOUT

RWPS.1.0 RECLAIMED WATER PUMP STATION SITE, GRADING & EROSION CONTROL PLAN
RWPS.2.0 RECLAIMED WATER PUMP STATION PLAN & PROFILE
RWPS.3.0 RECLAIMED WATER PUMP STATION POWER DIAGRAM
RWPS.4.0 OFFSITE PUMP STATION ELEVATION & DETAILS

D.1.0 STANDARD DETAILS
D.2.0 STANDARD DETAILS

CRYSTAL FALLS WEST

RELEASE OF THESE PLANS AND/OR SPECIFICATIONS DOES NOT CONSTITUTE A VERIFICATION OF DATA, CALCULATIONS, OR INFORMATION CONTAINED WITHIN THE PLANS AND/OR SPECIFICATIONS. THE ENGINEER OF RECORD IS SOLELY RESPONSIBLE FOR THE COMPLETENESS, ACCURACY, REGULATORY COMPLIANCE, AND ADEQUACY OF THESE PLANS AND/OR SPECIFICATIONS WHETHER OR NOT THE PLANS AND/OR SPECIFICATIONS WERE REVIEWED BY THE CITY ENGINEER(S).

ACCEPTED FOR CONSTRUCTION:

WAYNE S. WATTS, P.E., City Engineer
City of Leander, Texas
DATE: _____

CAPTAIN JOSHUA DAVIS, Fire Marshal
City of Leander, Texas
DATE: _____

JIM BECHTOL, Development Services Director
City of Leander, Texas
DATE: _____

STEVE BOSAK, Director of Parks & Recreation
City of Leander, Texas
DATE: _____

PAT WOMACK,P.E., Director of Public Works
City of Leander, Texas
DATE: _____

PREPARED BY:
JAY ENGINEERING COMPANY, INC

FOR REVIEW ONLY
THIS DOCUMENT IS RELEASED FOR THE PURPOSE OF REVIEW ONLY, BY:
NAME: Frank T. Phelan
P.E. No.: 98874
NOT INTENDED FOR BIDDING OR CONSTRUCTION PURPOSES.

NO.	DATE	REVISION	APPV.

JAECO JOB NO.: 157-044-20
JAECO JOB NO.: 157-045-20
JAECO JOB NO.: 157-046-20

Jay Engineering Company, Inc.
P.O. Box 1220
Leander, Texas 78646-1220
Tel. (512) 259-3882 Fax. (512) 259-8016
TEXAS REGISTERED ENGINEERING FIRM F-4780

Sheet
G.1.0

WATER RECLAMATION PLANT, LIFT STATION #16 & RECLAIMED WATER PUMP STATION - CRYSTAL FALLS WEST - SEC. 1_JOB NO._157-045-20

C:\Projects-Lookout-Group\Crystal-Falls-West_Sect_WRP_LftSta_PmpSta_044-045-046\Const-Plans_WRP\1st-Set\CFW-Sec1_WRP_Sh-G.1.0_Cover.dwg

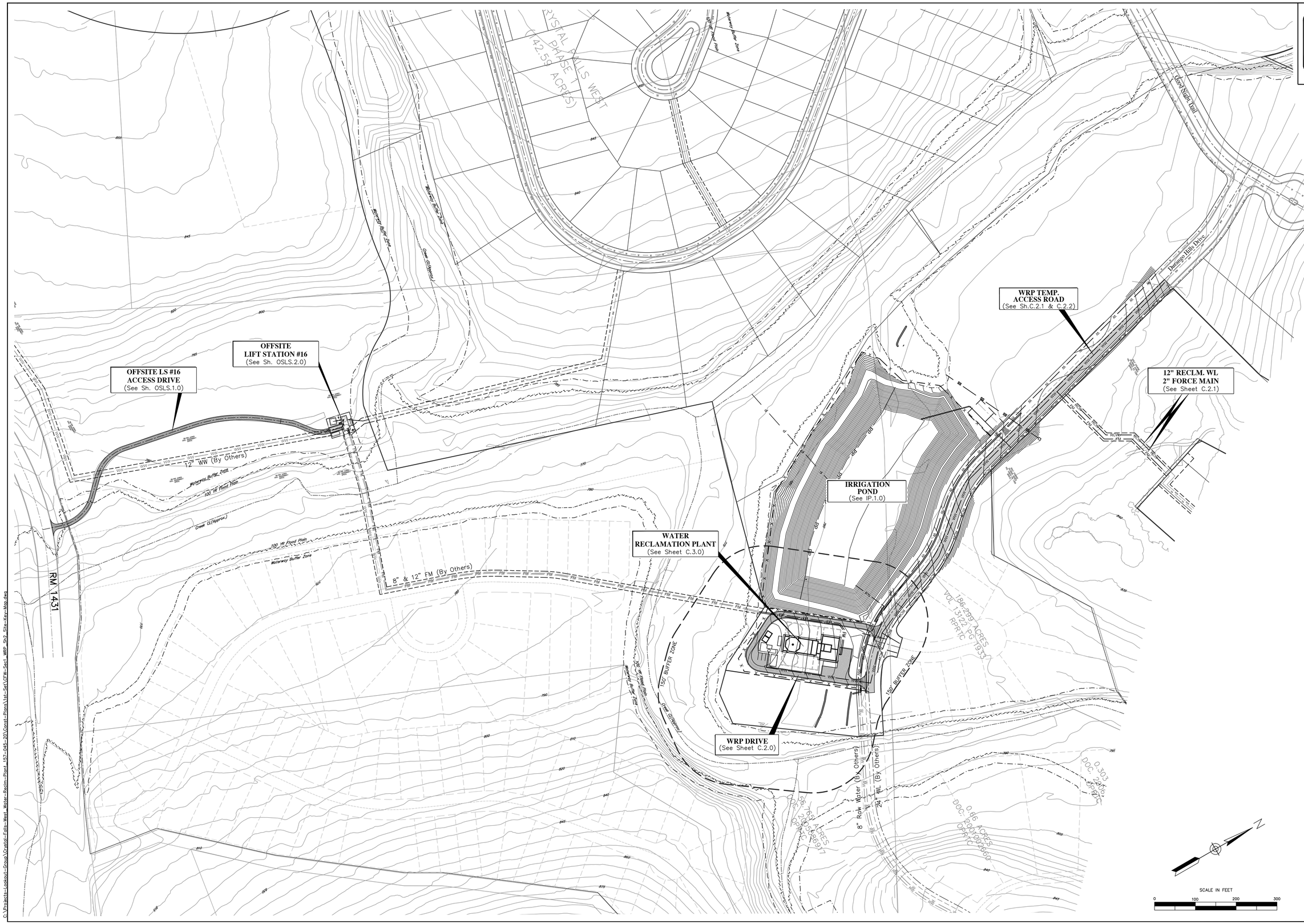

FOR REVIEW ONLY

THIS DOCUMENT IS RELEASED FOR THE PURPOSE OF REVIEW ONLY, BY:

NAME: Frank T. Phelan

P.E. No.: 93874

NOT INTENDED FOR BIDDING OR CONSTRUCTION PURPOSES.

Jay Engineering Company, Inc.
P.O. Box 1220
Lakeway, Texas 78646-1220
Tel: (512) 259-3882 Fax: (512) 259-8016
Texas Registered Engineering Firm F-4780

CRYSTAL FALLS WEST - SEC. 1
WRP, OFFSITE LIFT STA. & RECLAIMED WATER PUMP STA.

SITE LAYOUT & KEY MAP

THE LOOKOUT GROUP

SCALE: AS NOTED DWN: JJD DESIGN: FAJ DATE: DEC 2012

DWG. NO. AS NOTED JOB NO. 157-045-20

no.	date	Revisions	appv.

Sheet

G.2.0

C:\Projects-Lookout-Group\Crystal-Falls-West_Water-Recim-Plant_157-045-20\Const-Plans\1st-Set\CFW-Sec1_WRP_Sh2_Site-Key-Map.dwg

STANDARD CONSTRUCTION NOTES

CITY OF LEANDER GENERAL CONSTRUCTION NOTES

1. ALL WATER VALVE COVERS ARE TO BE PAINTED BLUE.
2. WASTE WATER LINES SHALL BE SDR-26 ASTM D2241 PVC WITH A MINIMUM TENSILE STRENGTH OF 7000 PSI AND A CELL CLASS OF 1245-B UNLESS OTHERWISE NOTED.
3. SAW CUT AND MATCH ALL EXISTING PAVEMENT.
4. ALL STRIPING IS TO BE TYPE I THERMOPLASTIC.
5. NO STREET LIGHTS OR SIGNS OF ANY KIND ARE TO BE PLACED WITHIN ANY SIDEWALKS.
6. NO BLASTING IS ALLOWED.
7. SPEED LIMIT SIGNS SHALL INDICATE A SPEED OF NO LESS THAN 30 MPH.
8. MANHOLES SHALL BE COATED WITH RAVEN OR POLYBRID.
9. ALL CONSTRUCTION SHALL BE IN ACCORDANCE WITH THE CITY OF AUSTIN STANDARD SPECIFICATIONS, DRAINAGE CRITERIA MANUAL AND TRANSPORTATION CRITERIA MANUAL.
10. ANY EXISTING UTILITIES, PAVEMENT,CURBS, SIDEWALKS, STRUCTURES, TREES, ETC., THAT ARE DAMAGED OR REMOVED SHALL BE REPAIRED OR REPLACED BY THE CONTRACTOR AT NO COST TO THE OWNER.
11. THE CONTRACTOR SHALL VERIFY ALL DEPTHS AND LOCATIONS OF EXISTING UTILITIES PRIOR TO ANY CONSTRUCTION. ANY DISCREPANCIES WITH CONSTRUCTION PLANS FOUND IN THE FIELD SHALL BE BROUGHT IMMEDIATELY TO THE ATTENTION OF THE ENGINEER.
12. MANHOLES FRAMES, COVERS, VALVES, CLEAN-OUTS, ETC. SHALL BE RAISED TO GRADE PRIOR TO FINAL PAVEMENT CONSTRUCTION.
13. THE CONTRACTOR SHALL GIVE THE CITY OF LEANDER 48 HOURS NOTICE BEFORE BEGINNING EACH PHASE OF CONSTRUCTION. TELEPHONE: 528-2700 or 2764 (ENGINEERING DEPARTMENT).
14. ALL AREAS DISTURBED OR EXPOSED DURING CONSTRUCTION SHALL BE REVEGETATED IN ACCORDANCE WITH PLANS AND SPECIFICATIONS. REVEGETATION SHALL CONSIST OF SODDING OR SEEDING, AT THE CONTRACTOR'S OPTION. HOWEVER, THE TYPE OF REVEGETATION MUST EQUAL OR EXCEED THE TYPE OF VEGETATION PRESENT BEFORE CONSTRUCTION UNLESS OTHERWISE REQUESTED BY THE PROPERTY OWNER.
15. PRIOR TO ANY CONSTRUCTION, THE CONTRACTOR SHALL CONVENE A PRE-CONSTRUCTION CONFERENCE WITH THE CITY OF LEANDER, HIMSELF, THE ENGINEER, OTHER UTILITY COMPANIES, ANY AFFECTED PARTIES AND ANY OTHER ENTITY THE CITY OR THE ENGINEER MAY REQUIRE.
16. THE CONTRACTOR AND THE ENGINEER SHALL KEEP ACCURATE RECORDS OF ALL CONSTRUCTION THAT DEVIATES FROM THE PLANS. THE ENGINEER SHALL FURNISH THE CITY OF LEANDER ACCURATE "RECORD" DRAWINGS FOLLOWING COMPLETION OF ALL CONSTRUCTION. THESE "RECORD" DRAWINGS SHALL MEET WITH THE SATISFACTION OF THE PUBLIC WORKS DEPARTMENT PRIOR TO FINAL ACCEPTANCE.
17. THE CITY OF LEANDER SHALL NOT BE PETITIONED FOR ACCEPTANCE UNTIL ALL NECESSARY EASEMENT DOCUMENTS HAVE BEEN SIGNED AND RECORDED.
18. WHEN CONSTRUCTION IS BEING CARRIED OUT WITHIN EASEMENTS, THE CONTRACTOR SHALL CONFINE HIS WORK TO WITHIN THE PERMANENT AND TEMPORARY EASEMENTS. PRIOR TO ACCEPTANCE, THE CONTRACTOR SHALL BE RESPONSIBLE FOR REMOVING ALL TRASH AND DEBRIS WITHIN THE PERMANENT EASEMENTS. CLEANUP SHALL BE TO THE SATISFACTION OF THE ENGINEER.
19. PRIOR TO ANY CONSTRUCTION, THE CONTRACTOR SHALL APPLY FOR AND SECURE ALL PROPER PERMITS FROM THE APPROPRIATE AUTHORITIES.
20. DENSITY TESTING FOR TRENCH BACKFILL IS TO BE DONE IN 12" LIFTS AT ONE TEST PER 500' INTERVALS OR EACH LINE SEGMENT.
21. A STABILIZED CONSTRUCTION ENTRANCE IS REQUIRED AT ALL POINTS WHERE CONSRUCTION TRAFFIC IS EXITING THE PROJECT ONTO EXISTING PAVEMENT.
22. THE ATTENTION OF THE CONTRACTOR IS DIRECTED TO THE CITY OF LEANDER STANDARD SPECIFICATIONS AND TO THE STATE LAW (VERNON'S ANNOTATED TEXAS STATUTES, ARTICLE 1436(C) AND THE NEED FOR EFFECTIVE PRECAUTIONARY MEASURES WHEN OPERATING EQUIPMENT IN THE VICINITY OF ELECTRICAL LINES. IF THE CONTRACTOR CHOOSES TO USE EQUIPMENT WITH THE POTENTIAL OF COMING WITHIN THE DISTANCE PRESCRIBED BY STATUTE, THE CONTRACTOR IS RESPONSIBLE FOR COORDINATION OF THE WORK WITH THE APPROPRIATE ELECTRIC UTILITY COMPANY.
23. CONTRACTOR SHALL NOTIFY THE LEANDER PUBLIC WORKS DEPARTMENT AT 528-2760 AT LEAST 48 HOURS PRIOR TO THE INSTALLATION OF ANY DRAINAGE FACILITY WITHIN A DRAINAGE EASEMENT OR STREET ROW. THE METHOD OF PLACEMENT AND COMPACTION OF BACKFILL IN THE CITY'S ROW MUST BE APPROVED PRIOR TO THE START OF BACKFILL OPERATIONS.
24. ALL STREET SIGNS SHALL INCLUDE BLOCK NUMBERS.
25. INLET COVERS ARE TO BE SECURED TO INLETS WITH CHAINS..
26. A MINIMUM OF 6" OF TOPSOIL SHALL BE PLACED BETWEEN THE CURB AND THE RIGHT-OF-WAY.
27. AVAILABLE BENCHMARKS (DATUM: 1929 NGVD) THAT MAY BE UTILIZED FOR THE CONSTRUCTION OF THIS PROJECT ARE DESCRIBED AS FOLLOWS:
    (1) BRASS DISK AT SW CORNER OF ELEVATED STORAGE TANK. WEST OF BAGDAD ROAD AND SOUTH OF CRYSTAL FALLS PARKWAY, 18 FEET NORTHEAST OF SOUTHWEST CORNER. ELEVATION=1110.828
    (2) COTTON SPINDLE FOUND IN 10" LIVE OAK LOCATED ON THE WEST SIDE OF BAGDAD ROAD 200' SOUTH OF THE INTERSECTION OF BAGDAD ROAD AND CRYSTAL FALLS PARKWAY. ELEV. 1046.93

STREET AND DRAINAGE NOTES:

1. CONTRACTOR SHALL PROVIDE QUALITY TESTING FOR ALL INFRASTRUCTURES TO BE ACCEPTED AND MAINTAINED BY THE CITY OF LEANDER AFTER COMPLETION. THE CONTRACTOR SHALL NOTIFY THE CITY OF LEANDER ENGINEERING DEPARTMENT AT 528-2769 NO LESS THAN 48 HOURS PRIOR TO ANY TESTING.
2. BACKFILL BEHIND THE CURB SHALL BE COMPACTED TO OBTAIN A MINIMUM OF 95% MAXIMUM DENSITY TO WITHIN 6" OF TOP OF CURB. MATERIAL USED SHALL BE PRIMARILY GRANULAR WITH NO ROCKS LARGER THAN 6" IN THE GREATEST DIMENSION. THE REMAINING 6" SHALL BE CLEAN TOPSOIL FREE FROM ALL CLODS AND SUITABLE FOR SUSTAINING PLANT LIFE.
3. DEPTH OF COVER FOR ALL CROSSINGS UNDER PAVEMENT, INCLUDING GAS, ELECTRIC, TELEPHONE, CABLE TV, ETC., SHALL BE A MINIMUM OF 36" BELOW SUBGRADE.
4. STREET RIGHT-OF-WAY SHALL BE GRADED AT A SLOPE OF 1/4" PER FOOT TOWARD THE CURB UNLESS OTHERWISE INDICATED. HOWEVER, IN NO CASE SHALL THE WIDTH OF RIGHT-OF-WAY AT 1/4" PER FOOT SLOPE BE LESS THAN 10 FEET UNLESS A SPECIFIC REQUEST FOR AN ALTERNATE GRADING SCHEME IS MADE TO AND ACCEPTED BY THE CITY OF LEANDER PUBLIC WORKS DEPARTMENT.
5. BARRICADES BUILT TO THE CITY OF LEANDER STANDARDS SHALL BE ERECTED ON ALL DEAD-END STREETS AND AS NECESSARY DURING CONSTRUCTION TO MAINTAIN JOB AND PUBLIC SAFETY.
6. ALL RCP SHALL BE MINIMUM CLASS III.
7. THE GEOTECHNICAL ENGINEER SHALL INSPECT THE SUBGRADE FOR COMPLIANCE WITH THE DESIGN ASSUMPTIONS MADE DURING PREPARATION OF THE SOILS REPORT. ANY ADJUSTMENTS THAT ARE REQUIRED SHALL BE MADE THROUGH REVISIONS OF THE CONSTRUCTION PLANS.
8. MOISTURE CONDITIONED SUBGRADE: THE SUBGRADE SHOULD BE SCARIFIED TO A DEPTH OF 6 INCHES AND MOISTURE ADJUSTED TO BETWEEN OPTIMUM AND +4 PERCENT OF OPTIMUM MOISTURE CONTENT. THE SUBGRADE SHOULD THEN BE RECOMPACTED TO AT LEAST 95% OF THE MAXIMUM DRY DENSITY AS DETERMINED BY ASTM D698. CARE SHOULD BE TAKEN TO INSURE THAT THE SUBGRADE DOES NOT DRY OUT OR BECOME SATURATED PRIOR TO PAVEMENT CONSTRUCTION.
9. WHENEVER SOIL INVESTIGATION OR EXCAVATION SHOWS MORE THAN 2 FEET OF EXPANSIVE SUBGRADE, WITH P.I. GREATER THAN 25, THE DESIGN PROFESSIONAL IS ADVISED TO ADOPT ONE OF THE FOLLOWING MEASURES:
    1. REPLACE 1.5 FEET OF SUBGRADE WITH A MATERIAL WITH A P.I. OF LESS THAN 15
    2. LIME STABILIZE 8 INCHES OF SUBGRADE.
    3. INCREASE THE BASE THICKNESS BY 50%
10. AT INTERSECTIONS WHICH HAVE VALLEY DRAINAGE, THE CROWNS OF THE INTERSECTING STREETS WILL CULMINATE IN A DISTANCE OF 40 FEET FROM INTERSECTING CURB LINE UNLESS OTHERWISE NOTED. INLETS ON THE INTERSECTING STREET SHALL NOT BE CONSTRUCTED WITHIN 50 FEET OF THE VALLEY GUTTER.
11. AT THE INTERSECTION OF TWO 44' STREETS OR LARGER, THE CROWNS OF THE INTERSECTING STREETS WILL CULMINATE IN A DISTANCE OF 40 FEET FROM INTERSECTING CURB LINE UNLESS OTHERWISE NOTED.
12. PRIOR TO FINAL ACCEPTANCE OF A STREET OUTSIDE OF THE CITY LIMITS, STREET NAME SIGNS CONFORMING TO COUNTY STANDARDS SHALL BE INSTALLED BY THE DEVELOPER.
13. A CURB LAYDOWN IS REQUIRED AT ALL POINTS WHERE THE PROPOSED SIDEWALK INTERSECTS THE CURB.
14. WHEN USING LIME FOR STABILIZATION OF THE SUBGRADE, IT SHALL BE PLACED IN SLURRY FORM. NO DRY LIME IS PERMITTED.

WATER & WASTEWATER CONSTRUCTION NOTES

1. THE CONTRACTOR SHALL CONTACT THE TEXAS EXCAVATION SYSTEM AT 1-800-344-8377 FOR EXISTING UTILITY LOCATIONS 48 HOURS PRIOR TO ANY EXCAVATION. KNOWN EXISTING UTILITIES ARE SHOWN ON THE DRAWINGS. PRIOR TO THE START OF CONSTRUCTION THE CONTRACTOR SHALL VERIFY THE LOCATIONS OF ALL UTILITIES THAT ARE TO BE EXTENDED, TIED TO, CROSSED, OR ALTERED; OR SUBJECT TO DAMAGE/INCONVENIENCE BY THE CONSTRUCTION OPERATIONS.
2. PRESSURE TAPS SHALL BE IN ACCORDANCE WITH CITY OF LEANDER STANDARD SPECIFICATIONS. THE CONTRACTOR SHALL PERFORM ALL EXCAVATION, ETC. AND SHALL FURNISH, INSTALL AND AIR TEST THE SLEEVE AND VALVE. A CITY OF LEANDER INSPECTOR MUST BE PRESENT WHEN THE CONTRACTOR MAKES A TAP, AND/OR ASSOCIATED TESTS. A MINIMUM OF TWO (2) WORKING DAYS NOTICE IS REQUIRED. "SIZE ON SIZE" TAPS WILL NOT BE PERMITTED UNLESS MADE BY THE USE OF AN APPROVED FULL-CIRCLE. GASKETED TAPPING SLEEVE. CONCRETE BLOCKING SHALL BE PLACED BEHIND AND UNDER ALL TAP SLEEVES A MINIMUM OF 24 HOURS PRIOR TO THE BRANCH BEING PLACED IN SERVICE.
3. FIRE HYDRANTS ON MAINS UNDER CONSTRUCTION SHALL BE SECURELY WRAPPED WITH A POLY WRAP BAG AND TAPED INTO PLACE. THE POLY WRAP SHALL BE REMOVED WHEN THE MAINS ARE ACCEPTED AND PLACED INTO SERVICE.
4. THE CONTRACTOR SHALL BE RESPONSIBLE FOR ALL COORDINATION BETWEEN HIMSELF AND OTHER CONTRACTORS AND UTILITIES IN THE VICINITY OF THE PROJECT. THIS INCLUDES GAS, WASTE WATER, ELECTRICAL, TELEPHONE, CABLE TV AND STREET DRAINAGE WORK. ONCE THE CONTRACTOR BECOMES AWARE OF A POSSIBLE CONFLICT, IT IS THE CONTRACTOR'S RESPONSIBILITY TO NOTIFY THE ENGINEER WITH IN TWENTY-FOUR (24) HOURS.
5. THE WATER LINE ALIGNMENT SHOWN ON THE PLANS SHALL BE ACHIEVED BY DEFLECTION, EXCEPT WHERE SPECIFIC FITTINGS ARE CALLED FOR ON THE PLANS. THERE WILL BE NO ADDITIONAL PAYMENTS FOR FITTINGS USED FOR DEFLECTION PURPOSES. UNDER NO CIRCUMSTANCES SHALL THE CONTRACTOR EXCEED THE MAXIMUM DEFLECTION ANGLE RECOMMENDED BY THE PIPE MANUFACTURER.
6. THRUST RESTRAINTS SHALL BE IN ACCORDANCE WITH THE CITY OF LEANDER STANDARD SPECIFICATIONS.
7. WATER LINE TESTING AND STERILIZATION SHALL BE IN ACCORDANCE WITH AWWA STANDARD.
8. MANDREL TESTING WILL BE REQUIRED ON ALL FLEXIBLE WASTE WATER PIPES AS PER TCEQ RULES.
9. ALL NEWLY INSTALLED PIPES AND RELATED PRODUCTS MUST CONFORM TO AMERICAN NATIONAL STANDARDS INSTITUTE/NATIONAL SANITATION FOUNDATION (ANSI/NSF) STANDARD 61 AND MUST BE CERTIFIED BY AN ORGANIZATION ACCREDITED BY ANSI.
10. ALL PLASTIC PIPES FOR USE IN PUBLIC WASTEWATER SYSTEMS MUST HAVE A STANDARD DIMENSION RATIO OF 26 OR LESS.
11. NO PIPE WHICH HAS BEEN USED FOR ANY PURPOSE OTHER THAN THE CONVEYANCE OF DRINKING WATER SHALL BE ACCEPTED OR RELOCATED FOR USE IN ANY PUBLIC DRINKING WATER SUPPLY.
12. DEPTH OF COVER FOR WASTEWATER AND WATER LINES SHALL BE 36" UNDER NATURAL GROUND AND 42" UNDER PAVED AREAS. STORM SEWER LINES SHALL BE 24" UNDER NATURAL GROUND AND 36" UNDER PAVED AREAS.
13. THE HYDROSTATIC LEAKAGE RATE SHALL NOT EXCEED THE AMOUNT ALLOWED OR RECOMMENDED BY AWWA FORMULAS.
14. ALL WATER MAINS, DISTRIBUTION LINES AND SERVICE LINES SHALL BE INSTALLED IN ENCASEMENT PIPE UNDERNEATH STREETS AND OTHER PAVED SURFACES.
15. ALL MECHANICAL RESTRAINTS SHALL BE INSTALLED IN ACCORDANCE WITH THE MANUFACTURERS INSTRUCTIONS.
16. WHERE WATER LINES CROSS WASTE WATER LINES AND THERE IS LESS THAN 9 FEET CLEARANCE BETWEEN LINES, THE WASTER WATER LINE SHALL BE PLACED SO THAT THE WASTE WATER PIPE SECTION IS CENTERED ON THE WATER LINE.
17. PROJECT SPECIFICATIONS TAKE PRECEDENT OVER PLANS AND SPECIAL CONDITIONS GOVERN OVER TECHNICAL SPECIFICATIONS.
18. PIPE MATERIAL FOR WATER MAINS SHALL BE PVC (AWWA C-900 MIN. CLASS 200), OR DUCTILE IRON (AWWA C-100 MIN. CLASS 50). WATER SERVICES (2" OR LESS) SHALL BE POLYETHYLENE TUBING (BLACK, 200 PSI, SDR-9)
19. PIPE FOR PRESSURE WASTEWATER MAINS SHALL BE PVC (SDR-21, PRESSURE CLASS 200 FOR 6" AND GREATER DIAMETERS AND SCHEDULED 40 PVC FOR 4" AND LESS DIAMETERS), OR DUCTILE IRON (AWWA C-100 MIN. CLASS 50). ALL PRESSURE SEWER FITTINGS SHALL BE SCHEDULED 80 PVC. PIPE MATERIAL FOR GRAVITY WASTE WATER MAINS SHALL BE PVC (ASTM D2241 OR D3034 MAX. SDR-26), DUCTILE IRON (AWWA C-100 MIN. CLASS 50), OR CONCRETE (ASTM C-76) WITH O-RING JOINT DESIGN.
20. ALL FIRE HYDRANTS SHALL BE DUCTILE IRON PIPE (AWWA C-100 MIN. CLASS 150)
21. ALL IRON PIPE AND FITTINGS SHALL BE WRAPPED WITH MINIMUM 8-MIL POLYETHYLENE.
22. THE CONTRACTOR SHALL CONTACT THE PUBLIC WORKS INSPECTION DEPARTMENT AT 528-2769 AT LEAST 48 HOURS PRIOR TO CONNECTING TO EXISTING WATER LINES.
23. ALL MANHOLES SHALL BE CONCRETE WITH CAST IRON RING AND COVER. ALL MANHOLES LOCATED OUTSIDE OF THE PAVEMENT SHALL HAVE BOLTED COVERS. TAPPING OF FIBERGLASS MANHOLES SHALL NOT BE ALLOWED.
24. THE CONTRACTOR MUST OBTAIN A BULK WATER PERMIT OR PURCHASE AND INSTALL A WATER METER FOR ALL WATER USED DURING CONSTRUCTION. A COPY OF THIS PERMIT MUST BE CARRIED AT ALL TIMES BY ALL WHO USE WATER.
25. LINE FLUSHING OR ANY ACTIVITY USING A LARGE QUANTITY OF WATER MUST BE SCHEDULED WITH THE WATER AND WASTE WATER SUPERINTENDENT AT 528-2780 or 528-2700.

TRENCH SAFETY NOTES:

1. IN ACCORDANCE WITH THE LAWS OF THE STATE OF TEXAS AND THE U.S. OCCUPATIONAL SAFETY AND HEALTH ADMINISTRATION REGULATIONS, ALL TRENCHES OVER 5 FEET IN DEPTH IN EITHER HARD AND COMPACT OR SOFT AND UNSTABLE SOIL SHALL BE SLOPED, SHEETED, BRACED OR OTHERWISE SUPPORTED. FURTHERMORE, ALL TRENCHES LESS THAN 5 FFET IN DEPTH SHALL ALSO BE EFFECTIVELY PROTECTED WHEN HAZARDOUS GROUND MOVEMENT MAY BE EXPECTED. TRENCH SAFETY SYSTEMS TO BE UTILIZED FOR THIS PROJECT ARE DESCRIBED IN ITEM 509S "TRENCH SAFETY SYSTEMS" OF THE CITY OF AUSTIN STANDARD SPECIFICATIONS.
2. IN ACCORDANCE WITH THE U.S. OCCUPATIONAL SAFETY AND HEALTH ADMINISTRATION REGULATIONS, WHEN EMPLOYEES ARE REQUIRED TO BE IN TRENCHES 4 FEET DEEP OR MORE, ADEQUATE MEANS OF EXIT, SUCH AS A LADDER OR STEPS MUST BE PROVIDED AND LOCATED SO AS TO REQUIRE NO MORE THAN 25 FEET OF LATERAL TRAVEL.

TRAFFIC MARKING NOTES:

1. ANY METHODS, STREET MARKINGS AND SIGNAGE NECESSARY FOR WARNING MOTORISTS, WARNING PEDESTRIANS OR DIVERTING TAFFIC DURING CONSTRUCTION SHALL CONFORM TO THE TEXAS MANUAL OF UNIFORM TRAFFIC CONTROL DEVICES FOR STREETS AND HIGHWAYS, LATEST EDITION.
2. ALL PAVEMENT MARKINGS, MARKERS, PAINT, TRAFFIC BUTTONS, TRAFFIC CONTROLS AND SIGNS SHALL BE INSTALLED IN ACCORDANCE WITH THE TEXAS DEPARTMENT OF TRANSPORTATION STANDARD SPECIFICATIONS FOR CONSTRUCTION OF HIGHWAYS, STREETS AND BRIDGES AND, THE TEXAS MANUAL OF UNIFORM TRAFFIC CONTROL DEVICES FOR STREETS AND HIGHWAYS, LATEST EDITIONS.

26. THE CONTRACTOR, AT HIS EXPENSE, SHALL PERFORM STERILIZATION OF ALL POTABLE WATER LINES CONSTRUCTED AND SHALL PROVIDE ALL EQUIPMENT (INCLUDING TEST GAUGES), SUPPLIES (INCLUDING CONCENTRATED CHLORINE DISINFECTING MATERIAL), AND NECESSARY LABOR REQUIRED FOR THE STERILIZATION PROCEDURE. THE STERILIZATION PROCEDURE SHALL BE MONITORED BY THE CITY OF LEANDER PERSONNEL. WATER SAMPLES WILL BE COLLECTED BY THE CITY OF LEANDER TO VERIFY EACH TREATED LINE HAS ATTAINED AN INITIAL CHLORINE CONCENTRATION OF 50 PPM. WHERE MEANS OF FLUSHING IS NECESSARY, THE CONTRACTOR, AT HIS EXPENSE, SHALL PROVIDE FLUSHING DEVICES AND REMOVE SAID DEVICES PRIOR TO FINAL ACCEPTANCE BY THE CITY OF LEANDER. ALL FLUSHING MUST BE COORDINATED WITH THE CITY OF LEANDER.
27. SAMPLING TAPS SHALL BE BROUGHT UP TO 3 FEET ABOVE GRADE AND SHALL BE EASILY ACCESSABLE FOR CITY PERSONNEL. AT THE CONTRACTOR'S REQUEST, AND IN HIS PRESENCE, SAMPLES FOR BACTERIOLOGICAL TESTING WILL BE COLLECTED BY THE CITY OF LEANDER NOT LESS THAN 24 HOURS AFTER THE TREATED LINE HAS BEEN FLUSHED OF THE CONCENTRATED CHLORINE SOLUTION AND CHARGED WITH WATER APPROVED BY THE CITY. THE CONTRACTOR SHALL SUPPLY A CHECK OR MONEY ORDER, PAYABLE TO THE TEXAS DEPARTMENT OF HEALTH, TO COVER THE FEE CHARGED FOR TESTING EACH WATER SAMPLE.
28. A QUALIFIED LAB SHALL PERFORM TESTING FOR ALL WASTE WATER PIPE INSTALLED AND PRESSURE PIPE HYDROSTATIC TESTING OF ALL WATER LINES CONSTRUCTED. THE OWNER'S CONTRACTOR SHALL PROVIDE ALL EQUIPMENT (INCLUDING PUMPS AND GAUGES), SUPPLIES AND LABOR NECESSARY TO PERFORM THE TESTS. THE CONTRACTOR SHALL NOTIFY THE CITY OF LEANDER PUBLIC WORKS DEPARTMENT NO LESS THAN 48 HOURS PRIOR TO PERFORMING STERILIZATION, QUALITY TESTING OR PRESSURE TESTING. A CITY OF LEANDER INSPECTOR SHALL BE PRESENT FOR ALL TESTS AND SHALL BE PAID FOR BY THE OWNER/CONTRACTOR. THESE SERVICES ARE PAID FOR AT THE TIME OF CONSTRUCTION PLAN SUBMITTAL.
29. THE CONTRACTOR SHALL NOT OPEN OR CLOSE ANY VALVES UNLESS AUTHORIZED BY THE CITY OF LEANDER.
30. ALL VALVE BOXES AND COVERS SHALL BE CAST IRON.
31. ALL WATER SERVICE , WASTE WATER SERVICE AND VALVE LOCATIONS SHALL BE APPROPRIATELY MARKED AS FOLLOWS:

WATER SERVICE	"W" ON TOP OF CURB
WASTER WATER SERVICE	"S" ON TOP OF CURB
VALVE	"V" ON TOP OF CURB

TOOLS FOR MARKING THE CURBS SHALL BE PROVIDED BY THE CONTRACTOR. OTHER APPROPRIATE MEANS OF MARKING SERVICE AND VALVE LOCATIONS SHALL BE PROVIDED IN AREAS WITHOUT CURBS. SUCH MEANS OF MARKING SHALL BE SPECIFIED BY THE ENGINEER AND ACCEPTED BY THE CITY OF LEANDER.

32. CONTACT THE CITY OF LEANDER CITY ENGINEER AT 528-2764 FOR ASSISTANCE IN OBTAINING EXISTING WATER AND WASTE WATER LOCATIONS.
33. SAND, AS DESCRIBED IN SPECIFICATION ITEM 510 PIPE, SHALL NOT BE USED AS BEDDING FOR WATER AND WASTER WATER LINES. ACCEPTABLE BEDDING MATERIALS ARE PIPE BEDDING STONE, PEA GRAVEL AND IN LIEU OF SAND, A NATURALLY OCCURRING OR MANUFACTURED STONE MATERIAL CONFORMING TO ASTM C33 FOR STONE QUALITY AND MEETING THE FOLLOWING GRADATION SPECIFICATION:

SIEVE SIZE	PERCENT RETAINED BY WEIGHT
1/2"	0
3/8"	0-2
#4	40-85
#10	95-100

34. THE CONTRACTOR IS HEREBY NOTIFIED THAT CONNECTING TO, SHUTTING DOWN, OR TERMINATING EXISTING UTILITY LINES MAY HAVE TO OCCUR AT OFF-PEAK HOURS. SUCH HOURS ARE USUALLY OUTSIDE NORMAL WORKING HOURS AND POSSIBLY BETWEEN 12 AM AND 6 AM.
35. ALL WASTE WATER CONSTRUCTION SHALL BE IN ACCORDANCE WITH THE TEXAS COUNCIL ON ENVIRONMENTAL QUALITY (TCEQ) REGULATIONS, 31 TAC CHAPTER 313 AND 31 TAC CHAPTER 317, AS APPLICABLE. WHENEVER TCEQ AND CITY OF LEANDER SPECIFICATIONS CONFLICT, THE MORE STRINGENT SHALL APPLY.
36. NO CURVILINEAR WASTEWATER DESIGN/LAYOUT IS PERMITTED.
37. ENGINEER SHALL SPECIFY SEQUENCE OF FLUSHING AND LOCATION OF BAC-T TESTING.

SEQUENCE OF CONSTRUCTION

1. Install erosion, sedimentation and tree protection measures.
2. Conduct pre-construction conference with the City of Leander and LCRA.
3. Clear street areas, excavate to subgrade and fill where required.
4. Install temporary diversion berms.
5. Install wastewater, water, & storm sewer.
6. Install electric/gas/telecommunications conduit with street crossings.
7. Install first base course.
8. Install curb and gutter and final base course.
9. Install all meter settings and adjust all manholes and boxes.
10. Pave streets.
11. Final adjust settings and clean work areas.
12. Set electric/gas/telecommunications services and clean work areas.
13. Install Water Quality BMP's.
14. Remove temporary rock berms.
15. Perform final cleanup and revegatation/restoration.
16. Remove temporary erosion controls upon acceptance of restored areas.
17. It is the responsibility of the property owner to obtain the necessary permits and install appropriate temporary erosion and sedimentation controls during any construction activity on individual lots.

DEVELOPER INFORMATION:
Lookout Partners, L.P.
2370 Rice Blvd., Suite 200
Houston, Texas 77005
Phone: (713) 524-5263
Fax: (713) 524-2807

OWNER'S REPRESENTATIVE RESPONSIBLE FOR PLAN ALTERATIONS:
Jay Engineering Co., Inc.
P.O. Box 1220
Leander, Texas 78646-1220
Phone: (512) 259-3882
Fax: (512) 259-8016

PERSON OR FIRM RESPONSIBLE FOR EROSION/SEDIMENTATION CONTROL MAINTENANCE:

CONTRACTOR

PERSON OR FIRM RESPONSIBLE FOR TREE/NATURAL AREA PROTECTION MAINTENANCE:

CONTRACTOR

FOR REVIEW ONLY

THIS DOCUMENT IS RELEASED FOR THE PURPOSE OF REVIEW ONLY, BY:

NAME: Frank T. Phelan

P.E. No.: 93874

NOT INTENDED FOR BIDDING OR CONSTRUCTION PURPOSES.

Jay Engineering Company, Inc.
P.O. Box 1220
Leander, Texas 78646-1220
Tel. (512) 259-3882 Fax. (512) 259-8016
Texas Registered Engineering Firm F-4780

CRYSTAL FALLS WEST - SEC. 1
WRP, OFFSITE LIFT STA. & RECLAIMED WATER PUMP STA.

CONSTRUCTION NOTES

THE LOOKOUT GROUP

SCALE: AS NOTED DWN: JJD DESIGN: FAJ DATE: DEC 2012
DWG. NO. AS NOTED JOB NO. 157-045-20

no.	date	Revisions	appv.

Sheet
G.3.0

C:\Projects-Lookout-Group\Crystal-Falls-West_Water-Recim-Plant_157-045-20\Const-Plans\1st-Set\CFW-Sec1_WRP_Sh-03_Const-Notes.dwg

STANDARD ENVIRONMENTAL NOTES

N.T.S.

1. TEMPORARY EROSION/SEDIMENTATION CONTROL AND TREE/NATURAL AREA PROTECTION MEASURES:

   a. THE CONTRACTOR SHALL INSTALL EROSION/SEDIMENTATION CONTROLS AND TREE/NATURAL AREA PROTECTIVE FENCING PRIOR TO ANY SITE PREPARATION WORK (CLEARING, GRUBBING, GRADING OR EXCAVATION).

   b. THE PLACEMENT OF EROSION/SEDIMENTATION CONTROLS SHALL BE IN ACCORDANCE WITH THE ENVIRONMENTAL CRITERIA MANUAL AND THE APPROVED EROSION AND SEDIMENTATION CONTROL PLAN.

   c. THE PLACEMENT OF TREE/NATURAL AREA PROTECTIVE FENCING SHALL BE IN ACCORDANCE WITH CITY OF AUSTIN STANDARD NOTES FOR TREE AND NATURAL AREA PROTECTION AND THE APPROVED GRADING/TREE AND NATURAL AREA PLAN.

   d. AS REQUIRED BY CITY ORDINANCE, A PRE-CONSTRUCTION CONFERENCE SHALL BE HELD SUBSEQUENT TO INSTALLATION OF THE INITIAL PHASE OF THE EROSION AND SEDIMENTATION CONTROLS AND PRIOR TO BEGINNING CONSTRUCTION. THIS CONFERENCE SHOULD TAKE PLACE ON THE SITE TO DEMONSTRATE COMPLIANCE WITH THE ENVIRONMENTAL CRITERIA MANUAL AND THE APPROVED PLANS, AND TO PRESENT A PLAN INCLUDING FUTURE EROSION AND SEDIMENTATION CONTROLS, TREE PROTECTION, DRAINAGE, UTILITY AND STREET LAYOUTS. THE PUBLIC WORK'S CONSTRUCTION INSPECTOR SHALL ARRANGE A MEETING DATE FOR THE CONTRACTOR WITH THE SUPERVISOR OF ENVIRONMENTAL INSPECTION, AT LEAST THREE (3) DAYS PRIOR TO THE MEETING TIME. THE CONSTRUCTION INSPECTOR, DESIGN ENGINEER AND/OR FIELD ENGINEER SHALL ALSO BE PRESENT AT THIS MEETING.

   e. ANY SIGNIFICANT VARIATION IN MATERIALS OR LOCATIONS OF CONTROLS OR FENCES FROM THAT SHOWN ON THE APPROVED PLANS MUST BE APPROVED BY THE ENGINEER, ENVIRONMENTAL SPECIALIST, OR ARBORIST, AS APPROPRIATE.

   f. THE CONTRACTOR IS TO INSPECT THE CONTROLS AND FENCES AT WEEKLY INTERVALS AND AFTER EVERY SIGNIFICANT RAINFALL TO INSURE THEY HAVE NOT BEEN SUBSTANTIALLY DISTURBED. THE PERSON(S) OR FIRM(S) RESPONSIBLE FOR MAINTENANCE OF CONTROLS AND FENCES SHALL BE IMMEDIATELY DIRECTED TO MAKE ANY NECESSARY REPAIRS.

   g. ANY SEDIMENT BUILD-UP OCCURING AFTER A SIGNIFICANT RAIN SHALL BE REMOVED AND PLACED IN THE DESIGNATED SPOIL DISPOSAL SITE.

2. PERMANENT EROSION CONTROL

   a. ALL DISTURBED AREAS SHALL BE RESTORED AS NOTED BELOW (FOR SPECIFICS, REFERENCE THE CITY OF AUSTIN STANDARD SPECIFICATIONS -SERIES 600, ENVIRONMENTAL ENHANCEMENT AND THE PROJECT MANUAL).

   b. A MINIMUM OF FOUR INCHES OF TOPSOIL SHALL BE PLACED IN ALL DRAINAGE CHANNELS (EXCEPT ROCK) AND BETWEEN THE CURB AND RIGHT-OF-WAY LINE.

   c. THE CONTRACTOR SHALL HYDROMULCH OR SOD ALL EXPOSED CUTS AND FILLS UPON COMPLETION OF CONSTRUCTION, EXCEPT WHERE CUTS ARE MADE IN SOLID ROCK.

   d. THE SEEDING FOR EROSION CONTROL SHALL BE APPLIED OVER AREAS DISTURBED BY CONSTRUCTION AS FOLLOWS:

      I. FROM SEPTEMBER 15 TO MARCH 1, SEEDING SHALL BE WITH A COMBINATION OF 1 POUND OF UNHULLED BERMUDA AND 7 POUNDS OF WINTER RYE PER 1000 SQUARE FEET WITH A PURITY OF 95% WITH 90% GERMINATION.

      II. FROM MARCH 2 TO SEPTEMBER 14, SEEDING SHALL BE WITH HULLED BERMUDA GRASS (CYNODEN DACTOLYN) AT A RATE OF 1 POUND PER 1000 SQUARE FEET WITH A PURITY OF 95% WITH 85% GERMINATION.

   e. FERTILIZER SHALL HAVE AN ANALYSIS OF 15-15-15 AND SHALL BE APPLIED AT THE RATE OF 653 POUNDS PER ACRE.

   f. THE PLANTED AREA SHALL BE IRRIGATED OR SPRINKLED IN A MANNER THAT WILL NOT ERODE THE TOPSOIL, BUT WILL SUFFICIENTLY SOAK THE SOIL TO A DEPTH OF SIX INCHES. THE IRRIGATION SHALL OCCUR AT TEN DAY INTERVALS DURING THE FIRST TWO MONTHS. RAINFALL OCCURENCES OF 1/2 INCH OR GREATER SHALL POSTPONE THE WATERING SCHEDULE ONE WEEK.

   g. MULCH TYPE USED SHALL BE EITHER CELLULOSE FIBER MULCH APPLIED AT A RATE OF 2000 POUNDS PER ACRE, OR WOOD FIBER MULCH APPLIED AT A RATE OF 2500 POUNDS PER ACRE.

   h. RESTORATION SHALL BE ACCEPTABLE WHEN THE GRASS HAS GROWN AT LEAST 1-1/2" HIGH WITH 95% COVERAGE, PROVIDED THAT NO BARE SPOTS LARGER THAN 16 SQUARE FEET EXIST (SEE ITEM 604.7 OF THE CITY OF AUSTIN STANDARD SPECIFICATIONS).

   i. WHEN REQUIRED, NATIVE GRASS SEEDINGS SHALL COMPLY WITH ITEM 604.6 OF THE CITY OF AUSTIN STANDARD SPECIFICATIONS.

DEVELOPER INFORMATION:

OWNER LOOKOUT PARTNERS, LP PHONE # (713) 524-5263

ADDRESS 2370 RICE BLVD.,SUITE 200, HOUSTON, TX. 77005

OWNER'S REPRESENTATIVE RESPONSIBLE FOR PLAN ALTERATIONS:

JAY ENGINEERING CO., INC. PHONE # (512) 259-3882

PERSON OR FIRM RESPONSIBLE FOR EROSION/SEDIMENTATION CONTROL MAINTENANCE:

CONTRACTOR

PERSON OR FIRM RESPONSIBLE FOR TREE/NATURAL AREA PROTECTION MAINTENANCE:

CONTRACTOR

NOTES:

1. EXCAVATION WILL BE LIMITED TO TRENCHING FOR UTILITIES, GRADING THE RIGHT-OF-WAYS AND GRADING PER THESE APPROVED PLANS. IF ANY DISTURBANCE OUTSIDE THE LIMITS OF CONSTRUCTION IS PROPOSED, A REVISED E&S CONTROL PLAN WILL BE SUBMITTED FOR REVIEW.
2. TEMPORARY EROSION & SEDIMENTATION CONTROLS APPROVED FOR THESE IMPROVEMENTS ARE TO BE KEPT IN PLACE DURING CONSTRUCTION UNDER THIS APPLICATION.
3. FILTERS MUST BE INSTALLED AT ALL CURB INLETS & AREA INLETS ONCE THEY ARE CONSTRUCTED PER DETAIL SHEET 20 AND REMAIN IN PLACE UNTIL VEGETATION IS ESTABLISHED.
4. SILT FENCES WILL BE TERMINATED AT ALL ROCK BERMS WITHOUT GAPS, A J-HOOK MUST BE INCLUDED AT THE TERMINAL POINT.

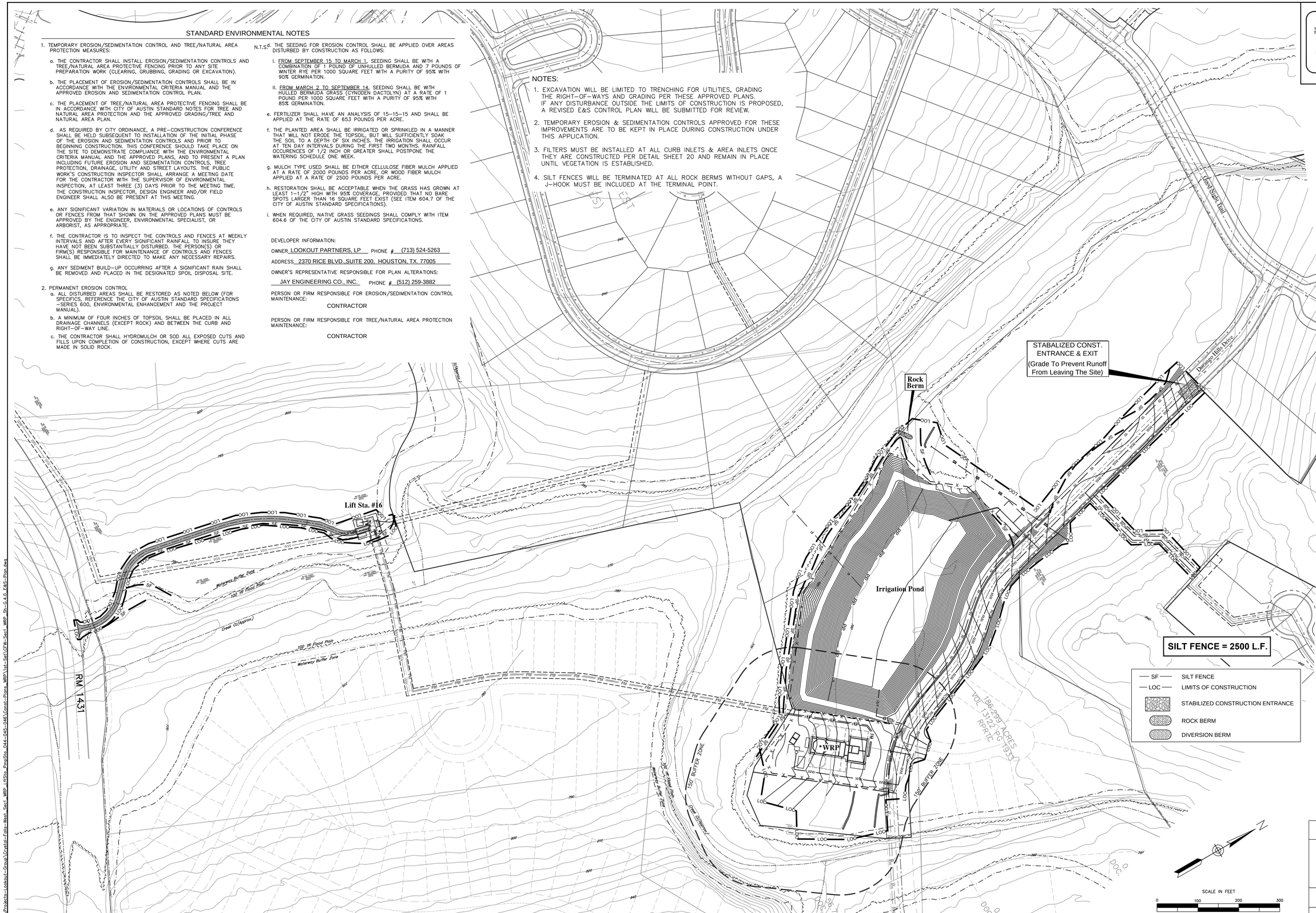

FOR REVIEW ONLY

THIS DOCUMENT IS RELEASED FOR THE PURPOSE OF REVIEW ONLY, BY:

NAME: Frank T. Phelan

P.E. No.: 93874

NOT INTENDED FOR BIDDING OR CONSTRUCTION PURPOSES.

Jay Engineering Company, Inc.
P.O. Box 1220
Lakeway, Texas 78646-1220
Tel (512) 259-3882 Fax. (512) 259-9016
Texas Registered Engineering Firm F-4780

CRYSTAL FALLS WEST - SEC. 1
WRP, OFFSITE LIFT STA. & RECLAIMED WATER PUMP STA.

E&S CONTROL PLAN

THE LOOKOUT GROUP

SCALE: AS NOTED DWN: JJD DESIGN: FAJ DATE: DEC. 2012

DWG. NO. AS NOTED JOB NO. 157-045-20

no.	date	Revisions	appv.

Sheet

G.4.0

C:\Projects-Lookout-Group\Crystal-Falls-West_Sec1_WRP_Lift1Sta_PmpSta_044-045-046\Const-Plans_WRP\1st-Set\CFW-Sec1_WRP_Sh-G.4.0_E&S-Plan.dwg

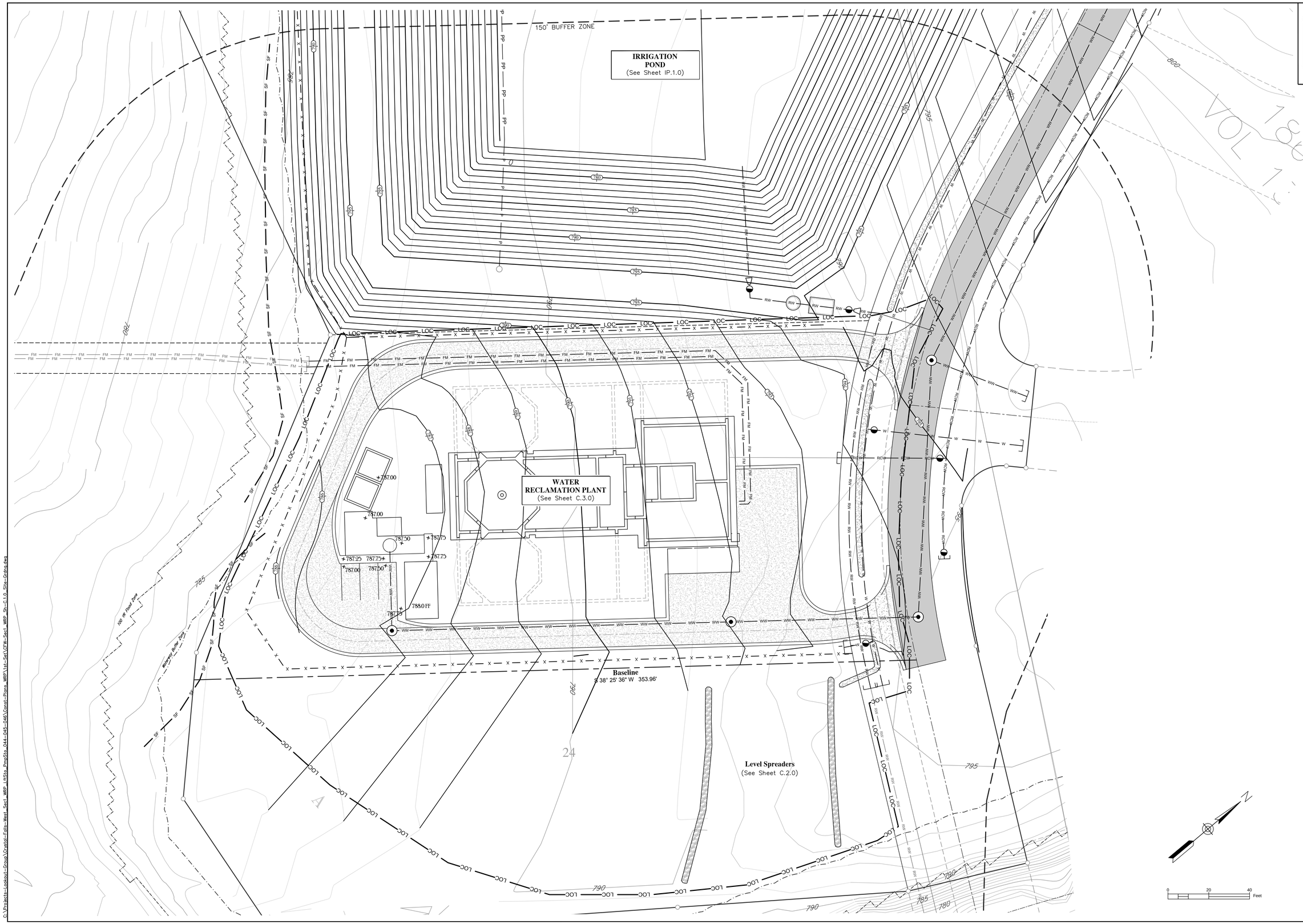

FOR REVIEW ONLY

THIS DOCUMENT IS RELEASED FOR THE PURPOSE OF REVIEW ONLY, BY:

NAME: Frank T. Phelan

P.E. No.: 93874

NOT INTENDED FOR BIDDING OR CONSTRUCTION PURPOSES.

Jay Engineering Company, Inc.
P.O. Box 1220
Lakeway, Texas 78646-1220
Tel: (512) 259-3882 Fax: (512) 259-8016
Texas Registered Engineering Firm F-4780

CRYSTAL FALLS WEST - SEC. 1
WRP - OFFSITE LIFT STA. & RECLAIMED WATER PUMP STA.

SITE GRADING

THE LOOKOUT GROUP

SCALE: AS NOTED | DWN: JJD | DESIGN: FAJ | DATE: DEC 2012

DWG. NO. AS NOTED | JOB NO. 157-045-20

no.	date	Revisions	appv.

Sheet
C.1.0

C:\Projects-Lookout-Group\Crystal-Falls-West_Sec1_WRP_LiftSta_PmpSta_044-045-046\Const-Plans_WRP\1st-Set\CFW-Sec1_WRP_Sh-C.1.0_Site-Grdng.dwg

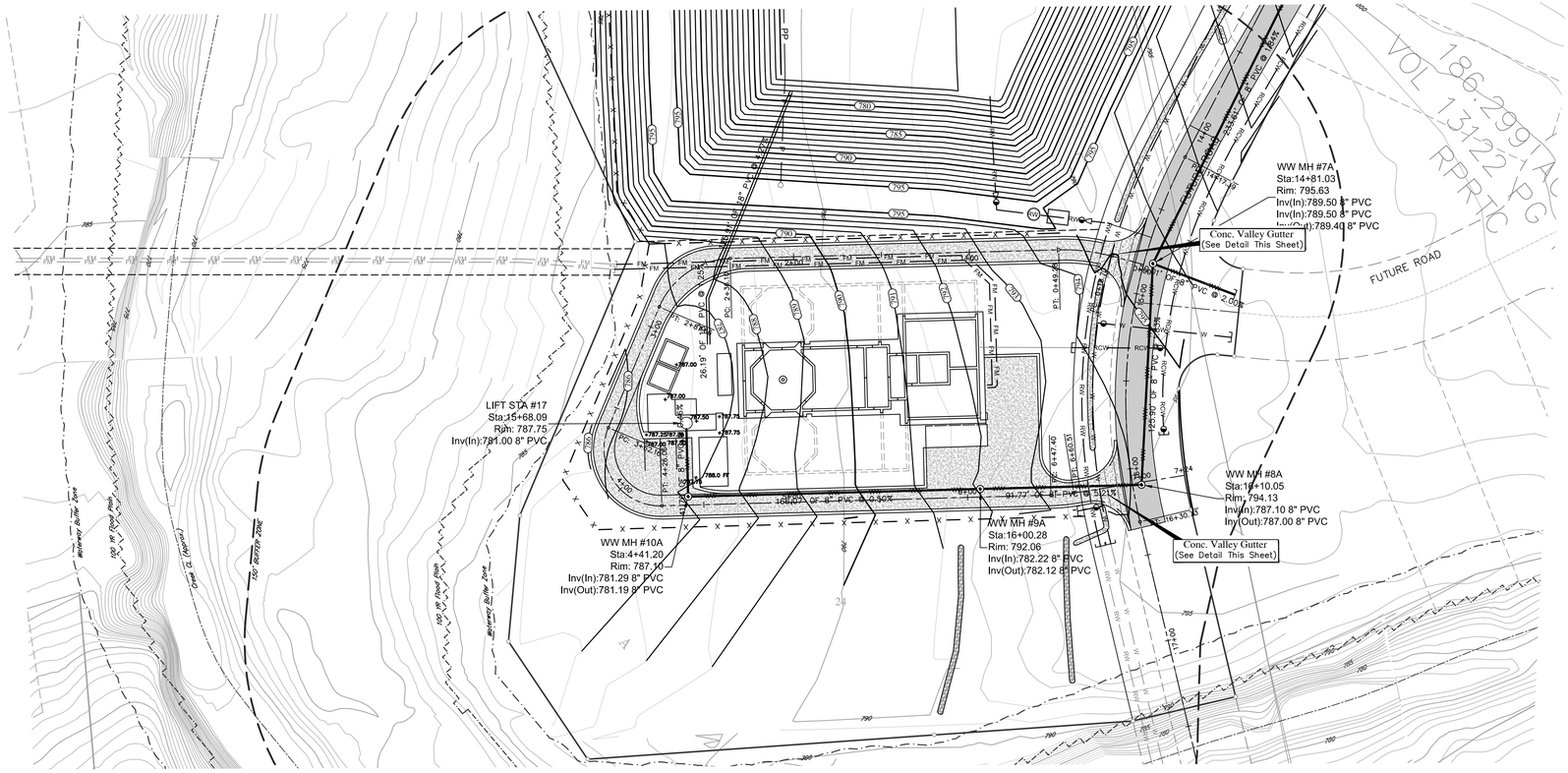

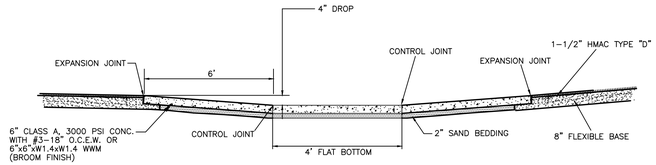

NOTES:

1. EXPANSION JOINTS SHALL BE 1/2" x 6" ASPHALT BOARD OR APPROVED EQUAL.
2. CONTROL JOINTS SHALL BE 1/4" WIDE TO A DEPTH OF 1/4 SLAB THICKNESS.

CONCRETE VALLEY GUTTER

N.T.S.

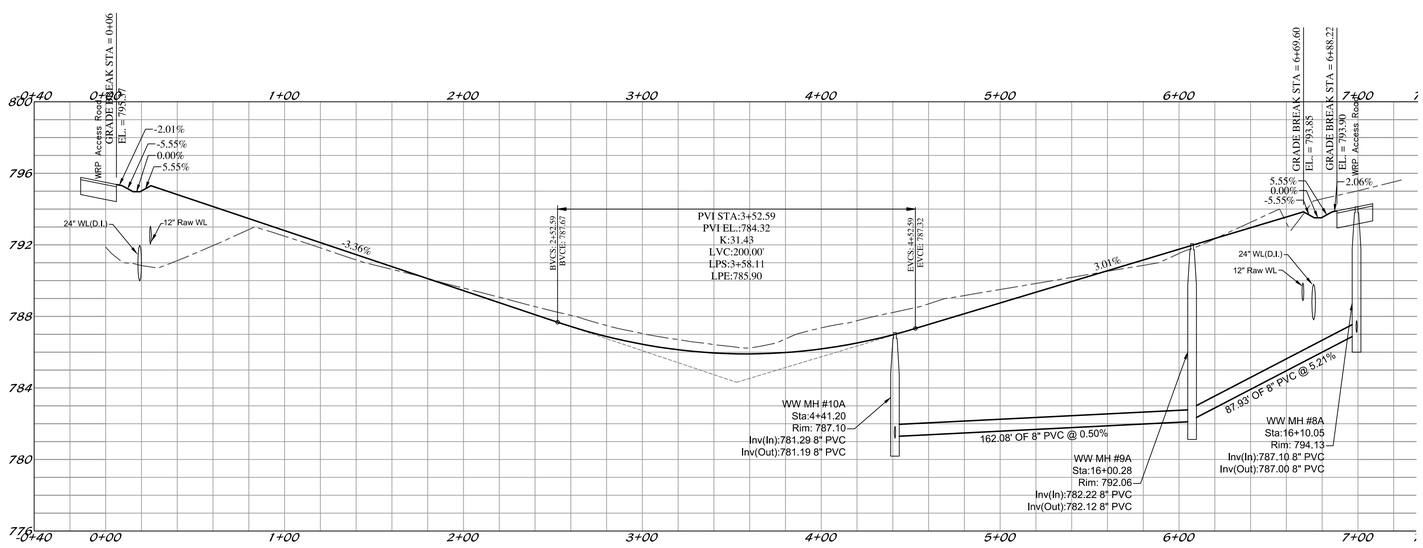

FOR REVIEW ONLY

THIS DOCUMENT IS RELEASED FOR THE PURPOSE OF REVIEW ONLY, BY:

NAME: Frank T. Phelan

P.E. No.: 93874

NOT INTENDED FOR BIDDING OR CONSTRUCTION PURPOSES.

Jay Engineering Company, Inc.
P.O. Box 1220
Lakeway, Texas 78646-1220
Tel: (512) 259-3882 Fax: (512) 259-9016
Texas Registered Engineering Firm F-4780

WRP, OFFSITE LIFT STA. & RECLAIMED WATER PUMP STA.
CRYSTAL FALLS WEST - SEC. 1

DRIVEWAY PLAN & PROFILE

THE LOOKOUT GROUP

SCALE: AS NOTED DWN: JJD DESIGN: FAJ DATE: OCT 2012

DWG. NO. AS NOTED JOB NO. 157-045-20

No.	date	Revisions	appr.

Sheet

C.2.0

C:\Projects-Lookout-Group\Crystal-Falls-West_Water-Recim-Plant_157-045-20\Const-Plans\1st-Set\CFW-Sec1_WRP_Sh-C2_Driveway-P&P.dwg

NOTES:

1. EXISTING UTILITY LOCATIONS SHOWN HEREON ARE APPROXIMATE. CONTRACTOR IS TO VERIFY LOCATIONS OF ALL EXISTING UTILITY LINES PRIOR TO COMMENCING WORK.
2. EROSION CONTROL MATTING WILL BE REQUIRED ON ALL DISTURBED SLOPES STEEPER THAN 3:1.
3. ALL RECLAIMED WATER LINES TO BE PURPLE PVC PIPE.
4. RECLAMED WATER LINE VALVES TO BE "FLORIDA" STYLE PER DETAIL SHEET C.19.0.

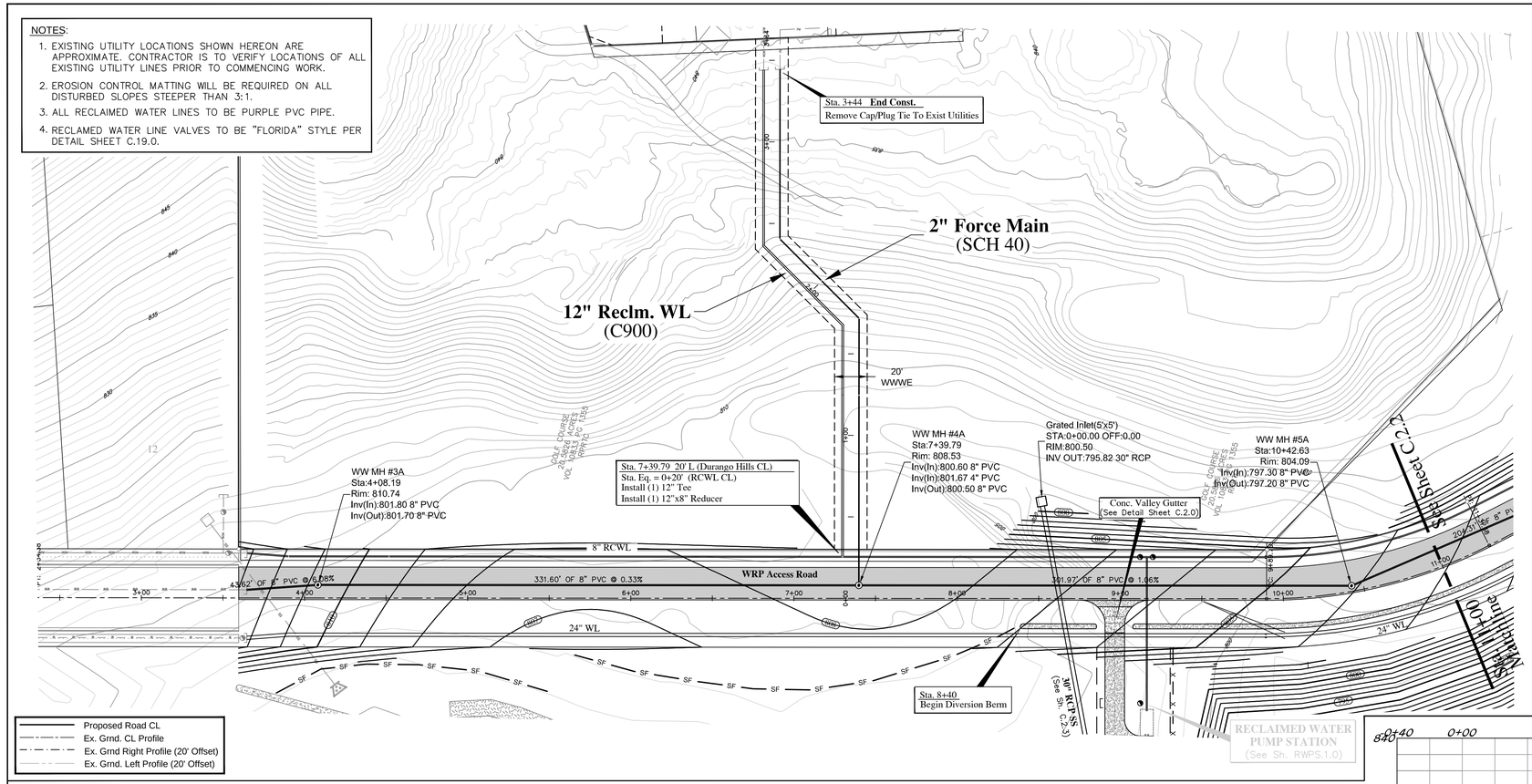

KEY

- WW MH
- VALVE
- HYDRANT

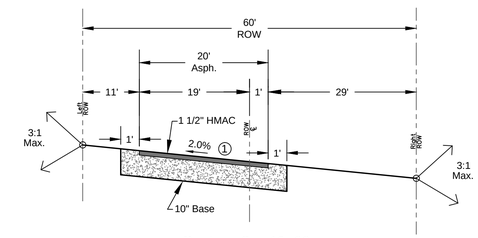

Begin to Sta. 13+00
n.t.s.

① 1 1/2" HMAC
8" Comp. Base

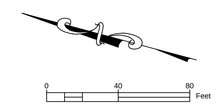

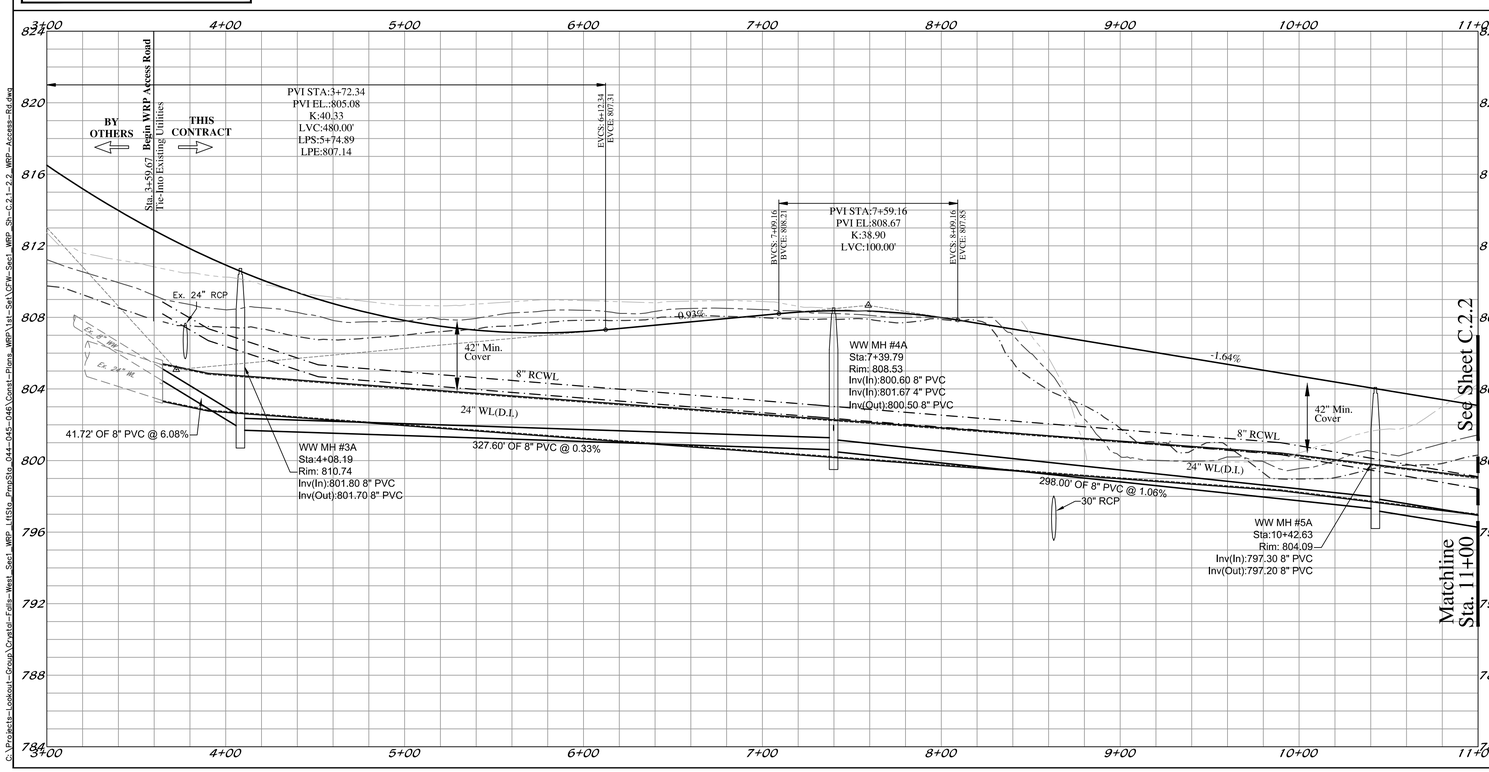

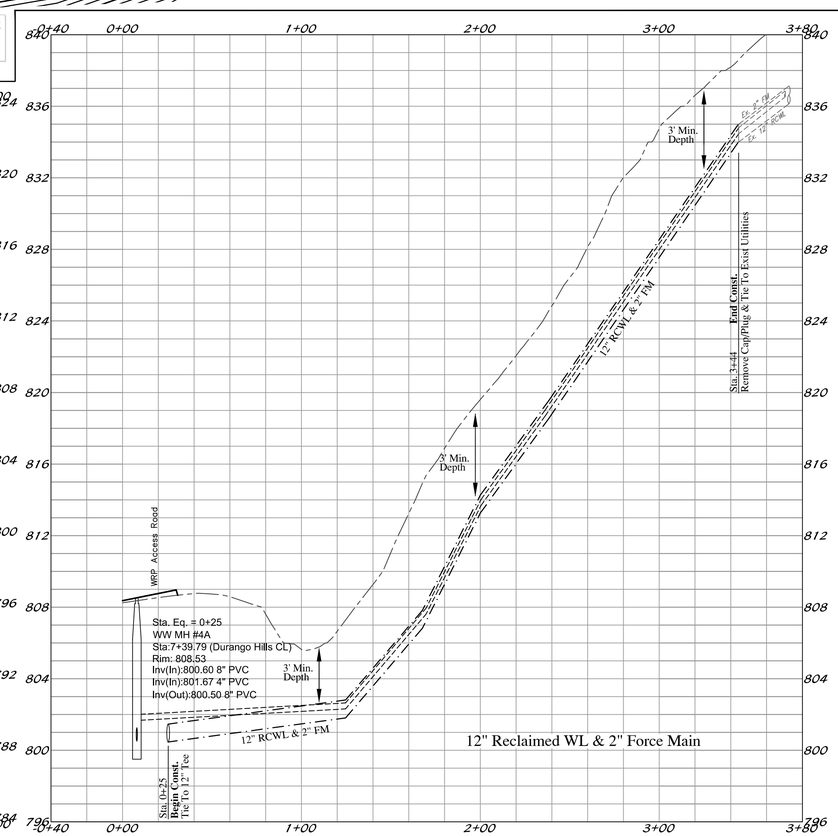

FOR REVIEW ONLY

THIS DOCUMENT IS RELEASED FOR THE PURPOSE OF REVIEW ONLY, BY:

NAME: Frank T. Phelan

P.E. No.: 93874

NOT INTENDED FOR BIDDING OR CONSTRUCTION PURPOSES.

No.	date	Revisions	dpw.

Jay Engineering Company, Inc.
P.O. Box 1220
Lakeway, Texas 78646-1220
Tel: (512) 259-3882 Fax: (512) 259-8016
Texas Registered Engineering Firm F-4780

CRYSTAL FALLS WEST - SEC. 1
WRP, OFFSITE LIFT STA. & RECLAIMED WATER PUMP STA.

WRP ACCESS ROAD P&P
12" RCWL & 2" FM P&P

THE LOOKOUT GROUP

SCALE: AS NOTED | DWN: JJD | DESIGN: FAJ | DATE: DEC 2012
DWG. NO. AS NOTED | JOB NO. 157-045-20

Sheet
C.2.1

C:\Projects-Lookout-Group\Crystal-Falls-West_Sec1_WRP_LIftSta_PmpSta_044-045-046\Const-Plans_WRP\1st-Set\CFW-Sec1_WRP_Sh-C.2.1-2.2_WRP-Access-Rd.dwg

NOTES:

1. EXISTING UTILITY LOCATIONS SHOWN HEREON ARE APPROXIMATE. CONTRACTOR IS TO VERIFY LOCATIONS OF ALL EXISTING UTILITY LINES PRIOR TO COMMENCING WORK.
2. EROSION CONTROL MATTING WILL BE REQUIRED ON ALL DISTURBED SLOPES STEEPER THAN 3:1.
3. ALL RECLAIMED WATER LINES TO BE PURPLE PVC PIPE.
4. RECLAMED WATER LINE VALVES TO BE "FLORIDA" STYLE PER DETAIL SHEET C.19.0.

RAW WATER CONTROL VALVE METER NOTES

1. 6" SOLENOID ACTIVATED CONTROL VALVE IN 6" DIA. RCP VAULT (CLA-VAL 136-03, ENERGIZE TO OPEN, w/CHECK FEATURE).
2. VALVE TO BE CONTROLLED BY CITY SCADA SYSTEM TO OPERATE ONLY WHEN BCRUA SYSTEM RAW WATER PUMPS ARE CALLED.
3. METER TO BE 6" TURBINE.

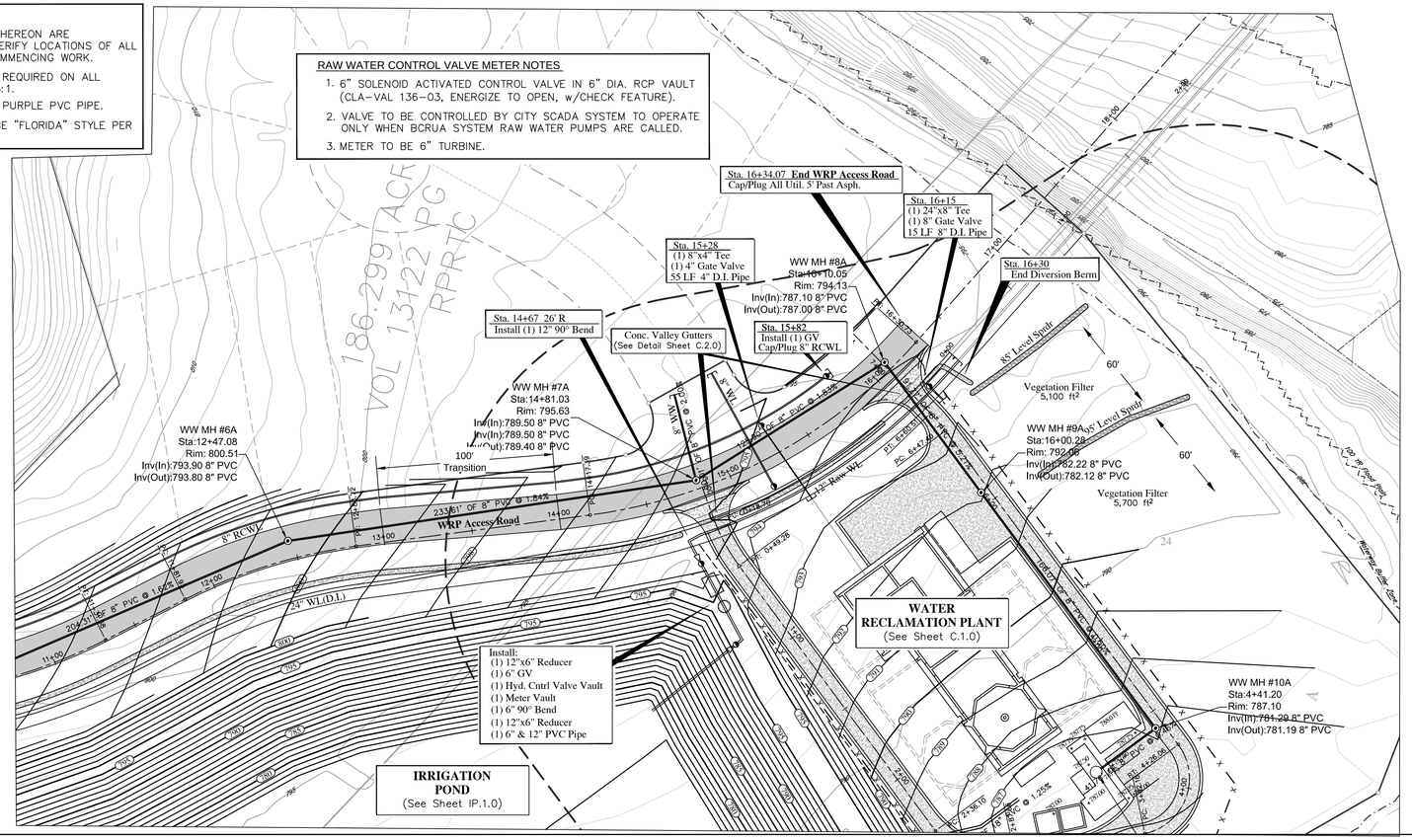

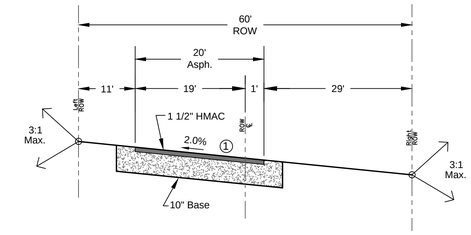

Begin to Sta. 13+00
n.t.s.

① = 1 1/2" HMAC
8" Comp. Base

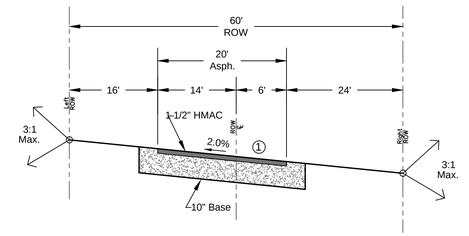

Sta. 14+00 to End
n.t.s.

0 40 80 Feet

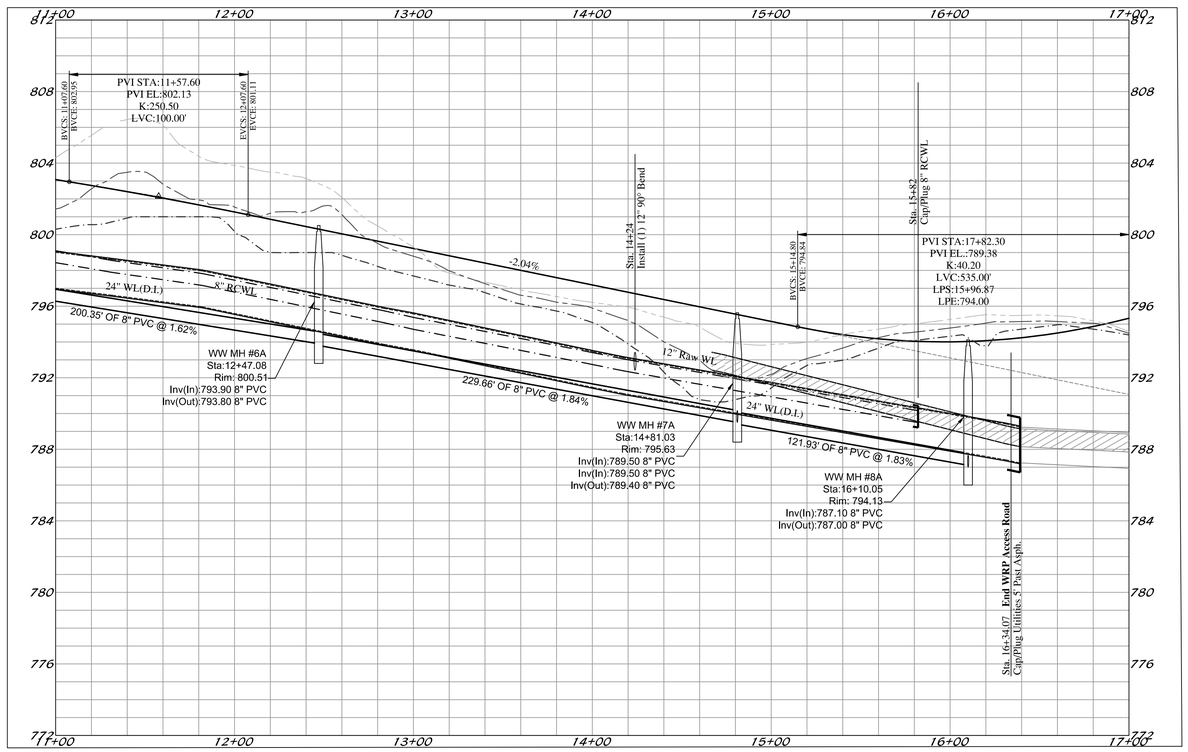

Note:
See Sheet C.2.3 For Drainage Area Map

VEGETATIVE FILTER AREA

Water Quality Volume (WQV) = Drainage Area (DA) x Runoff Volume x 43,560/12

Runoff Volume = [0.05 + (0.0085 x IC_{eff})] x 1.93

DA =	2.9 Acres
Access Road Impervious Cover =	0.3 Acres
WRP Impervious Cover =	0.33 Acres
Total Impervious Cover =	0.63 Acres
Effective Impervious Cover (IC_{eff}) =	22 %
Runoff Volume =	0.45 Inches
WQV =	4,744 ft^3

Natural Vegatative Filter Strip Area (A) = WQV x 2.27

A = 10,768 ft^2

FOR REVIEW ONLY

THIS DOCUMENT IS RELEASED FOR THE PURPOSE OF REVIEW ONLY, BY:

NAME: Frank T. Phelan

P.E. No.: 93874

NOT INTENDED FOR BIDDING OR CONSTRUCTION PURPOSES.

Jay Engineering Company, Inc.
P.O. Box 1220
Lakeway, Texas 78646-1220
Tel (512) 259-3882 Fax (512) 259-8016
Texas Registered Engineering Firm F-4780

CRYSTAL FALLS WEST - SEC. 1
WRP, OFFSITE LIFT STA. & RECLAIMED WATER PUMP STA.

WRP ACCESS ROAD PLAN & PROFILE

THE LOOKOUT GROUP

SCALE: AS NOTED DWN: JJD DESIGN: FAJ DATE: DEC 2012
DWG. NO. AS NOTED JOB NO. 157-045-20

No.	date	Revisions	appv.

Sheet
C.2.2

C:\Projects-Lookout-Group\Crystal-Falls-West_Sec1_WRP_LftSta_PmpSta_044-045-046\Const-Plans_WRP\1st-Set\CFW-Sec1_WRP_Sh-C.2.1-2.2_WRP-Access-Rd.dwg

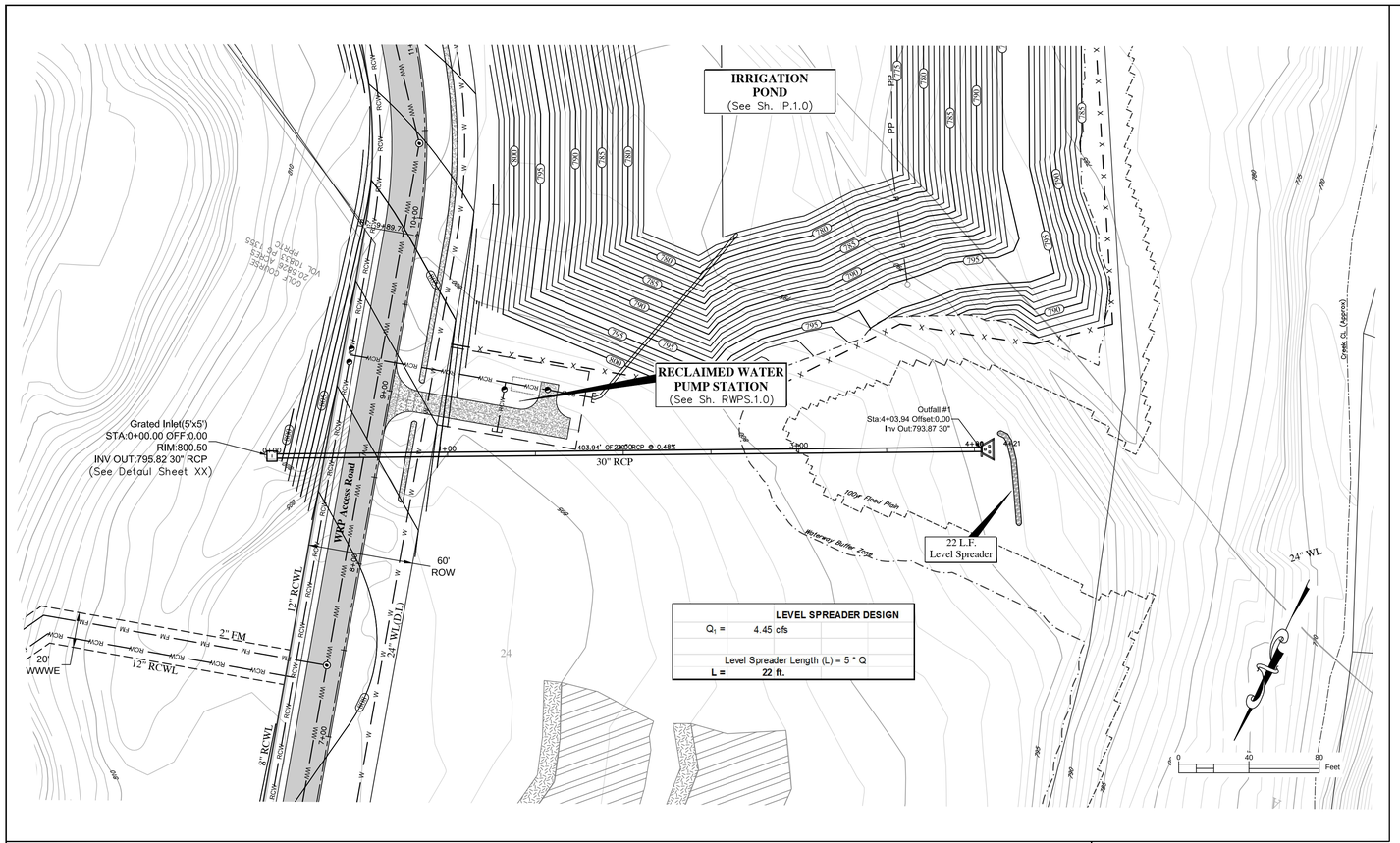

Proposed Road CL
Ex. Grnd. CL Profile
Ex. Grnd Right Profile (20' Offset)
Ex. Grnd. Left Profile (20' Offset)

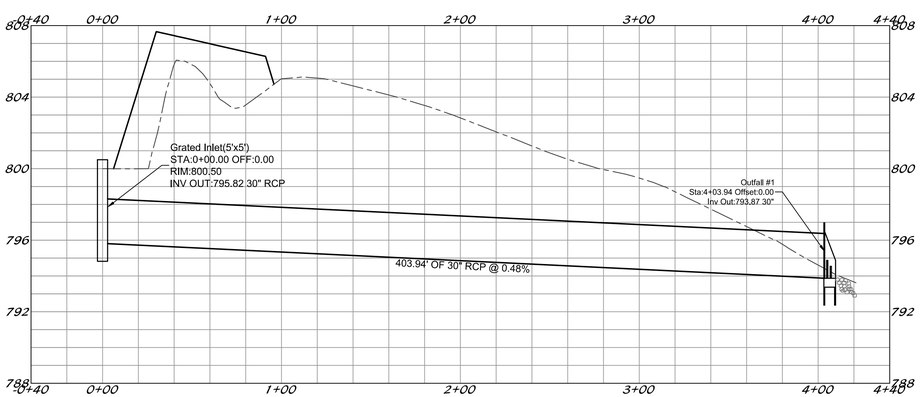

Drainage Area	Area (Acres)	Time of Concentration (min.)	C_1	C_{25}	C_{100}	Q_1 (cfs)	Q_{25} (cfs)	Q_{100} (cfs)
Offsite	7	18.31	0.18	0.47	0.54	4.45	22.5	31.8
Filter	2.9	7.46	0.2	0.48	0.56	2.8	12.71	17.7

DRAINAGE AREA MAP

FOR REVIEW ONLY

THIS DOCUMENT IS RELEASED FOR THE PURPOSE OF REVIEW ONLY, BY:

NAME: Frank T. Phelan

P.E. No.: 93874

NOT INTENDED FOR BIDDING OR CONSTRUCTION PURPOSES.

no.	date	Revisions	appv.

Jay Engineering Company, Inc.
P.O. Box 1220
Lakeway, Texas 78646-1220
Tel: (512) 259-3882 Fax: (512) 259-8016
Texas Registered Engineering Firm F-4780

CRYSTAL FALLS WEST - SEC. 1
WRP, OFFSITE LIFT STA. & RECLAIMED WATER PUMP STA.

WRP ACCESS ROAD STORM SEWER P&P

THE LOOKOUT GROUP

SCALE: AS NOTED DWN: JJD DESIGN: FAJ DATE: DEC 2012
DWG. NO. AS NOTED JOB NO. 157-045-20

Sheet
C.2.3

C:\Projects-Lookout-Group\Crystal-Falls-West_Sec1_WRP_Lft1\In_PropSto_044-045-046\Const-Plans_WRP\1st-Set\CFW-Sec1_WRP_Sh-C.2.1-2.2_WRP-Access-Rd.dwg

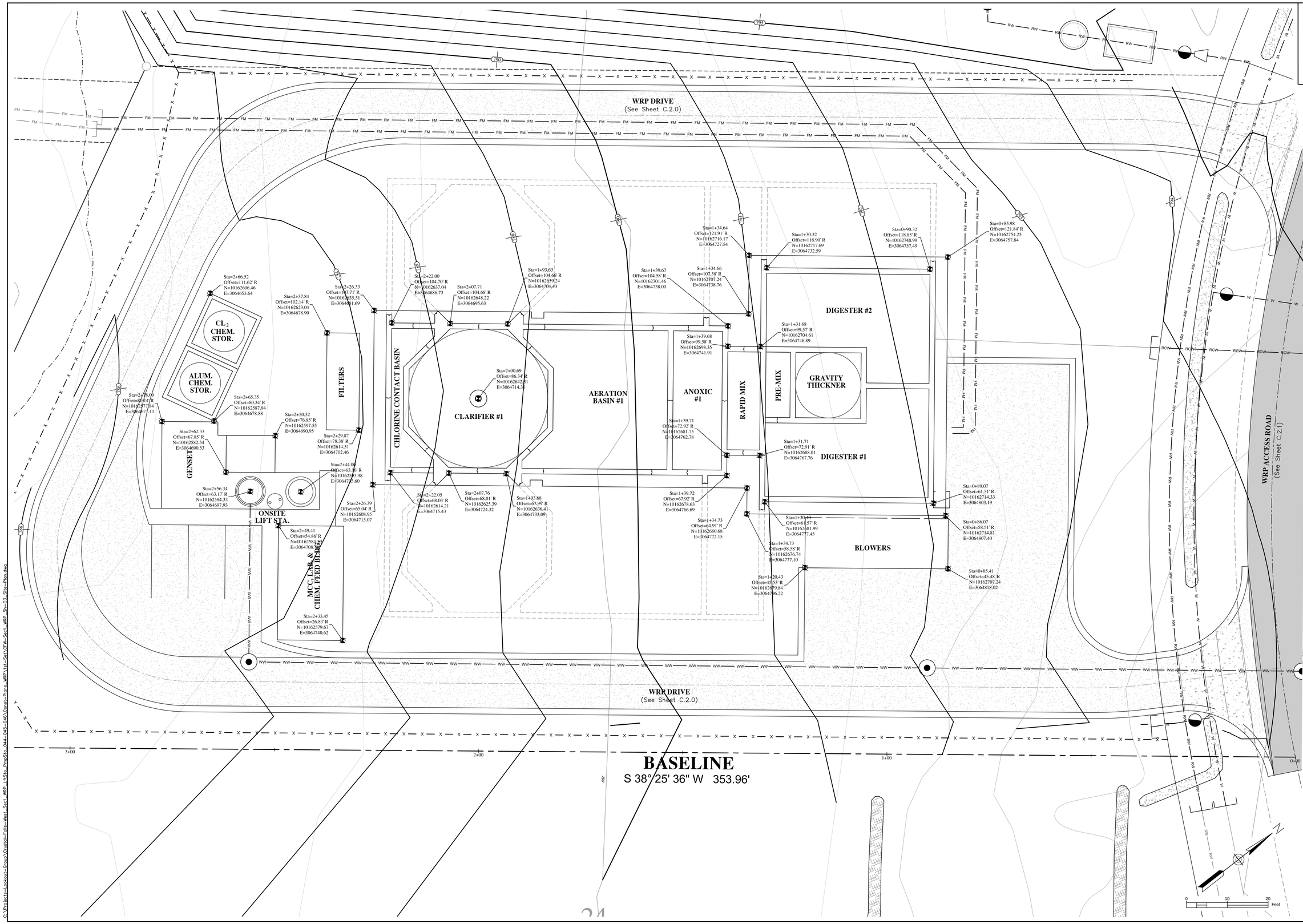

FOR REVIEW ONLY

THIS DOCUMENT IS RELEASED FOR THE PURPOSE OF REVIEW ONLY, BY:

NAME: Frank T. Phelan

P.E. No.: 93874

NOT INTENDED FOR BIDDING OR CONSTRUCTION PURPOSES.

Jay Engineering Company, Inc.
P.O. Box 1220
Lakeway, Texas 78646-1220
Tel: (512) 259-3882 Fax: (512) 259-8016
Texas Registered Engineering Firm F-4780

CRYSTAL FALLS WEST - SEC. 1
WRP, OFFSITE LIFT STA. & RECLAIMED WATER PUMP STA.

SITE PLAN

THE LOOKOUT GROUP

SCALE: AS NOTED DWN: JJD DESIGN: FAJ DATE: DEC 2012

DWG. NO. AS NOTED JOB NO. 157-045-20

No.	date	Revisions	appr.

Sheet

C.3.0

C:\Projects-Lookout-Group\Crystal-Falls-West_Sec1_WRP_LftSta_PmpSta_044-045-046\Const-Plans_WRP\1st-Set\CFW-Sec1_WRP_Sh-C3_Site-Plan.dwg

NOTES:
1. FILL BOLLARDS WITH CONCRETE FOLLOWING INSTALLATION.
2. BOLLARDS TO BE PLACED AS SHOWN.
3. FINISH PAINT TO SPECIFCATIONS.

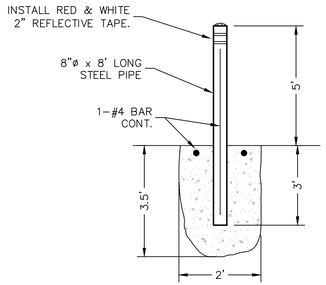

BOLLARD DETAIL (typ.)
N.T.S.

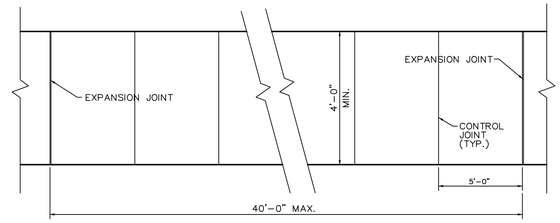

PLAN

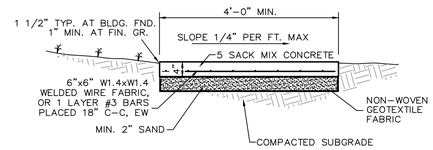

SECTION

SIDEWALK DETAIL
N.T.S

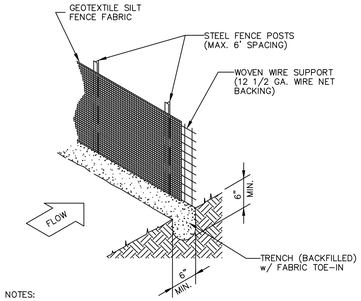

GENERAL NOTES:

1. STEEL POSTS WHICH SUPPORT THE SILT FENCE SHALL BE INSTALLED ON A SLIGHT ANGLE TOWARD THE ANTICIPATED RUNOFF SOURCE. POSTS MUST BE EMBEDDED A MINIMUM OF ONE FOOT.
2. THE TOE OF THE SILT FENCE SHALL BE TRENCHED IN WITH A SPADE OR MECHANICALLY TRENCHED, SO THAT THE DOWNSLOPE FACE OF THE TRENCH IS FLAT AND PERPENDICULAR TO THE LINE OF FLOW.
3. THE TRENCH MUST BE A MINIMUM OF 6 INCHES DEEP AND 6 INCHES WIDE TO ALLOW FOR THE SILT FENCE MATERIAL TO BE LAID IN THE GROUND AND BACKFILLED WITH COMPACTED MATERIAL.
4. SILT FENCE SHOULD BE SECURELY FASTENED TO EACH STEEL POST OR TO WOVEN WIRE, WHICH IS IN TURN ATTACHED TO THE STEEL FENCE POSTS.
5. INSPECTION SHALL BE MADE WEEKLY OR AFTER EACH RAINFALL EVENT, AND REPAIR OR REPLACEMENT SHALL BE MADE PROMPTLY AS NEEDED.
6. SILT FENCE SHALL BE REMOVED WHEN THE SITE IS COMPLETELY STABILIZED, SO AS NOT TO BLOCK OR IMPEDE STORM FLOW OR DRAINAGE. ACCUMULATED SILT SHALL BE DISPOSED OF AS IN NO. 7 BELOW.
7. ACCUMULATED SILT SHALL BE REMOVED WHEN IT REACHES A DEPTH OF 6 INCHES. THE SILT SHALL BE DISPOSED OF IN AN APPROVED SITE AND IN SUCH A MANNER AS TO NOT CONTRIBUTE TO ADDITIONAL SILTATION.

SILT FENCE
N.T.S.

NOTE:
ALL CONCRETE SHALL BE CLASS "A" = 3000 PSI

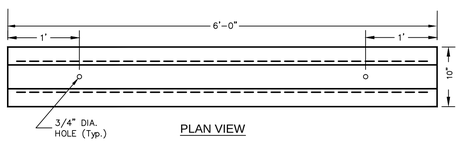

PLAN VIEW

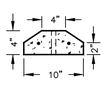

CROSS SECTION

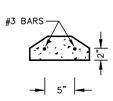

END VIEW

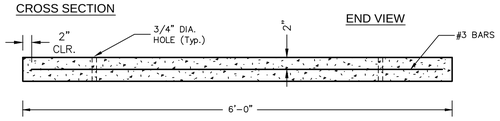

LONGITUDINAL SECTION

WHEEL STOP DETAIL
N.T.S.

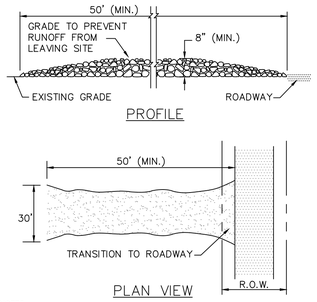

NOTES:
1. STONE SIZE – 3 TO 5 INCH OPEN GRADED ROCK.
2. LENGTH – AS EFFECTIVE, BUT NO LESS THAN 50 FEET.
3. THICKNESS – NOT LESS THAN 8 INCHES.
4. WIDTH – NOT LESS THAN FULL WIDTH OF ALL POINTS OF INGRESS OR EGRESS.
5. WASHING – WHEN NECESSARY, WHEELS SHALL BE CLEANED TO REMOVE SEDIMENT PRIOR TO ENTRANCE ONTO PUBLIC ROADWAY. WHEN WASHING IS REQUIRED, IT SHALL BE DONE ON AN AREA STABILIZED WITH CRUSHED STONE WHICH DRAINS INTO AN APPROVED TRAP OR SEDIMENT BASIN. ALL SEDIMENT SHALL BE PREVENTED FROM ENTERING ANY STORM DRAIN, DITCH OR WATERCOURSE USING APPROVED METHODS.
6. MAINTENANCE – THE ENTRANCE SHALL BE MAINTAINED IN A CONDITION WHICH WILL PREVENT TRACKING OR FLOWING OF SEDIMENT INTO PUBLIC ROADWAYS. THIS MAY REQUIRE PERIODIC TOP DRESSING WITH ADDITIONAL STONE AS CONDITIONS DEMAND, AND REPAIR AND/OR CLEAN–OUT OF ANY MEASURES USED TO TRAP SEDIMENT. ALL SEDIMENT SPILLED, DROPPED, WASHED OR TRACKED ONTO PUBLIC ROADWAY MUST BE REMOVED IMMEDIATELY.
7. DRAINAGE – ENTRANCE MUST BE PROPERLY GRADED OR INCORPORATE A DRAIN SWALE TO PREVENT RUNOFF FROM LEAVING THE CONSTRUCTION SITE.

STABILIZED CONSTRUCTION ENTRANCE
N.T.S.

NOTES:

1. BASE MATERIAL TO BE TXDOT GRADE 1 OR 2 MEETING REQUIREMENTS OF SERIES 200 SECTION 210S OF COA STANDARD SPECS.
2. CONTRACTOR TO INSTALL BASE ROAD SECTION PRIOR TO PLANT CONSTRUCTION. HMAC TO BE INSTALLED FOLLOWING SUBSTANTIAL COMPLETION OF PLANT.

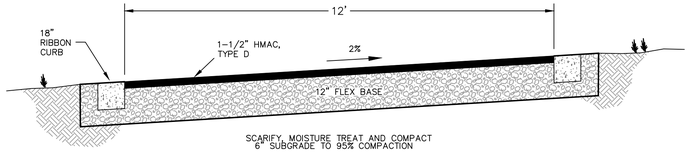

Sta. 0+00 to 2+50

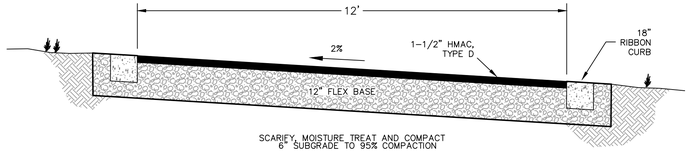

Sta. 2+50 to End

TYPICAL DRIVEWAY SECTION
n.t.s.

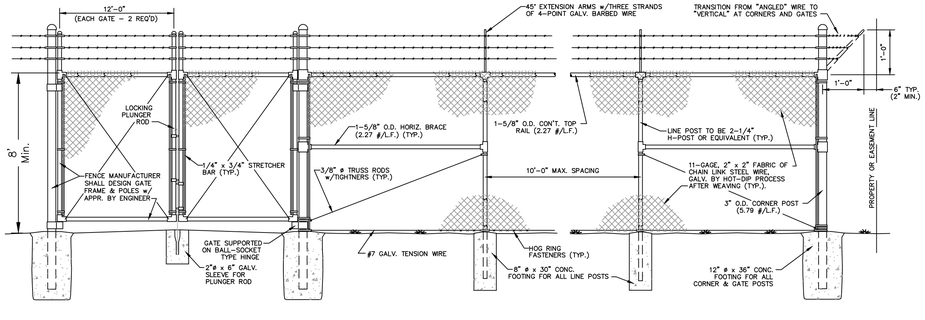

CHAIN LINK FENCE DETAILS
N.T.S.

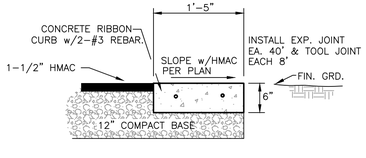

RIBBON CURB DETAILS
N.T.S.

FOR REVIEW ONLY
THIS DOCUMENT IS RELEASED FOR THE PURPOSE OF REVIEW ONLY. BY:
NAME: Frank T. Phelan
P.E. No.: 93874
NOT INTENDED FOR BIDDING OR CONSTRUCTION PURPOSES.

Jay Engineering Company, Inc.
P.O. Box 1220
Leander, Texas 78646-1220
Tel: (512) 259-9086 Fax: (512) 259-9016
Texas Registered Engineering Firm F-4780

CRYSTAL FALLS WEST - SEC. 1
WRP, OFFSITE LIFT STA. & RECLAIMED WATER PUMP STA.

SITE DETAILS

THE LOOKOUT GROUP

SCALE: AS NOTED | DWN: JJD | DESIGN: FAJ | DATE: DEC 2012
DWG. NO. AS NOTED | JOB NO. 157-045-20

No.	date	Revisions	appv.

Sheet
C.4.0

G:\Projects-Lookout-Group\Crystal-Falls-West_Water-Recim-Plant_157-045-20\Const-Plans\1st-Set\CFW-Sec1_WRP_Sh-C4_Site-Details.dwg

DESIGN FLOW RATES

HEADWORKS
Q (DESIGN) = 0.79 MGD
Q (PEAK) = 3.16 MGD

RAPID MIX, ANOXIC, AERATION, CLARIFIER, CHLORINE CONTACTOR
Q (DESIGN) = 0.25 MGD
Q (PEAK) = 1.00 MGD

FILTER
Q (DESIGN) = 0.50 MGD
Q (PEAK) = 1.00 MGD

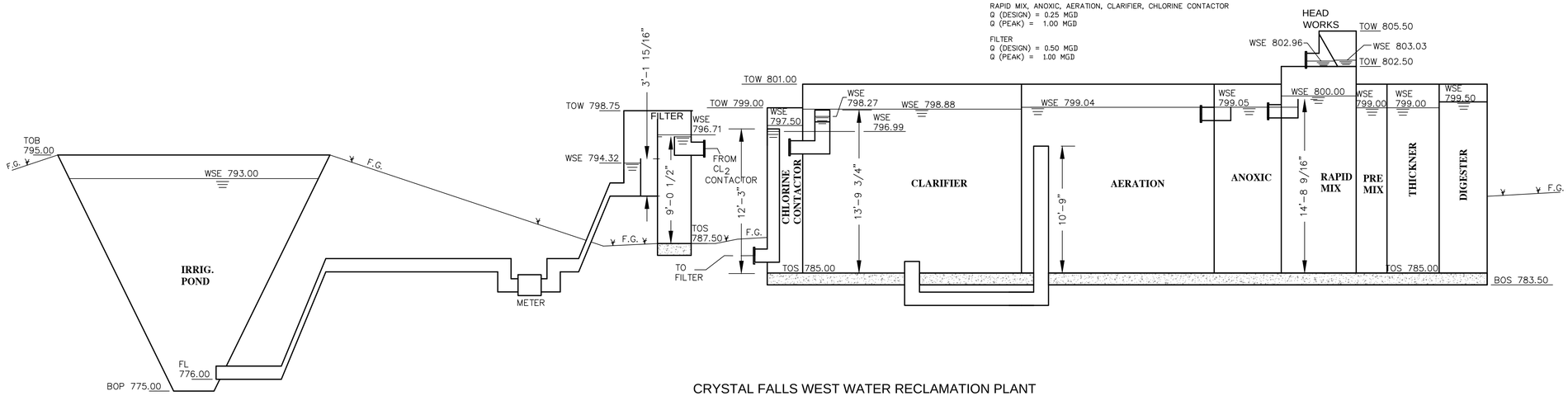

CRYSTAL FALLS WEST WATER RECLAMATION PLANT
HYDRAULIC PROFILE

N.T.S.

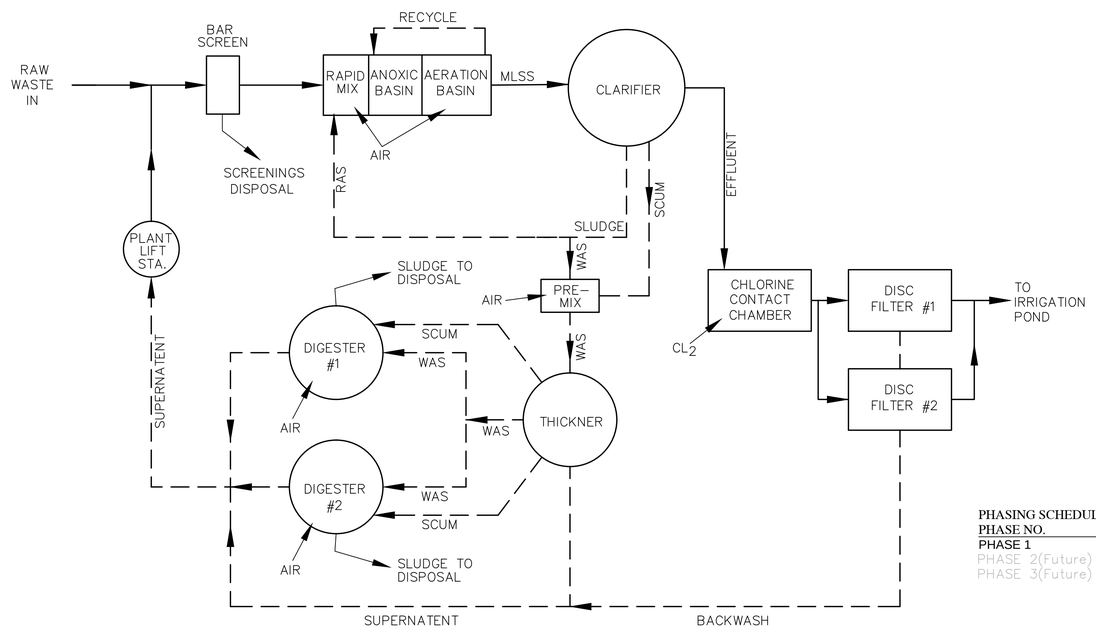

PROCESS FLOW DIAGRAM

N.T.S.

PHASING SCHEDULE

PHASE NO.	PHASE CAP.	PLANT CAP.
PHASE 1	250,000 GPD	250,000 GPD
PHASE 2(Future)	259,000 GPD	509,000 GPD
PHASE 3(Future)	259,000 GPD	768,000 GPD

NOTES:

1. MANUFACTURER OF TREATMENT EQUIPMENT SHALL BE RESPOSIBLE FOR ADEQUATE SIZING OF GATES, PIPES, WEIRS AND OPENINGS TO PASS FLOWS REQUIRED AND AS SHOWN IN HYDRAULIC PROFILE OR SPECIFICATIONS.

2. ALL HOSE BIBS SHALL BE ⅝" UNLESS OTHERWISE STATED. VACUUM BREAKERS TO BE INSTALLED ON ALL HOSE BIBS.

3. ALL EXPOSED NON-POTABLE WATER PIPING SHALL BE COLOR-CODED AND SIGNED PER TCEQ RULES.

4. WALKWAYS AND STAIRS TO HAVE KICK PLATES PER OSHA REQUIREMENTS (TYP. ALL WALKWAYS AND STAIRS)

FOR REVIEW ONLY

THIS DOCUMENT IS RELEASED FOR THE PURPOSE OF REVIEW ONLY, BY:

NAME: Frank T. Phelan

P.E. No.: 93874

NOT INTENDED FOR BIDDING OR CONSTRUCTION PURPOSES.

Jay Engineering Company, Inc.
P.O. Box 1220
Leander, Texas 78646-1220
Tel: (512) 259-3882 Fax: (512) 259-9016
Texas Registered Engineering Firm F-4780

CRYSTAL FALLS WEST - SEC. 1
WRP, OFFSITE LIFT STA. & RECLAIMED WATER PUMP STA.

PROCESS DIAGRAM & HYDRAULIC PROFILE

THE LOOKOUT GROUP

SCALE: AS NOTED DWN: JJO DESIGN: FAJ DATE: DEC 2012
DWG. NO. AS NOTED JOB NO. 157-045-20

no.	date	Revisions	appv.

Sheet
C.5.0

C:\Projects-Lookout-Group\Crystal-Falls-West_Sec1_WRP_LitSta_PmpSta_044-045-046\Const-Plans_WRP\1st-Set\CFW-Sec1_WRP_Sh-C.5.0_Process-Diagram.dwg

NOTES:
1. ALL PIPING UNDER PLANT SLAB TO BE DUCTILE IRON PIPE, ENCASED IN FLOWABLE FILL.
2. ALL HOSE BIBS TO HAVE VACCUM BREAKERS INSTALLED.
3. CONTRACTOR TO PROVIDE WRITTEN TEST REPORT CONFIRMING PROPER OPERATION OF RPZ ASSEMBLIES.
4. ALL ABOVE GROUND PIPING TO BE INSULATED PER SPECIFICATIONS.
5. ALL ABOVE GROUND PIPING TO BE COLOR CODED PER TCEQ STANDARDS, LABELED AND HAVE ARROWS INDICATING DIRECTION OF FLOW.

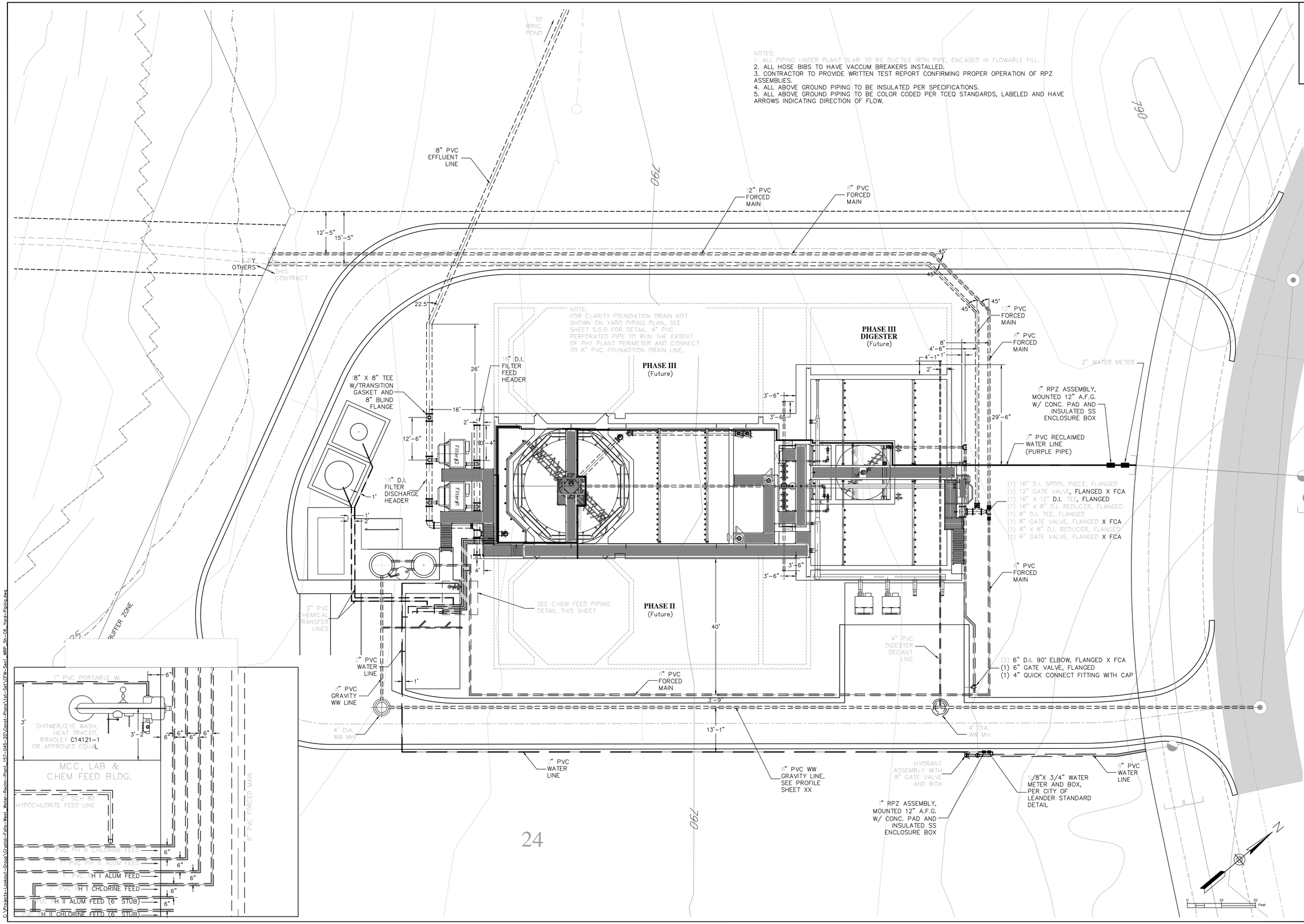

FOR REVIEW ONLY

THIS DOCUMENT IS RELEASED FOR THE PURPOSE OF REVIEW ONLY, BY:

NAME: Frank T. Phelan

P.E. No.: 93874

NOT INTENDED FOR BIDDING OR CONSTRUCTION PURPOSES.

Jay Engineering Company, Inc.
P.O. Box 1220
Lakeway, Texas 78646-1220
Tel: (512) 259-3882 Fax: (512) 259-8016
Texas Registered Engineering Firm F-4780

WRP, OFFSITE LIFT STA. & RECLAIMED WATER PUMP STA.
CRYSTAL FALLS WEST - SEC. 1

YARD PIPING

THE LOOKOUT GROUP

SCALE: AS NOTED | DWN: JJD | DESIGN: FAJ | DATE: OCT 2012

DWG. NO. AS NOTED | JOB NO. 157-045-20

No.	date	Revisions	dpw.

Sheet
C.6.0

C:\Projects-Lookout-Group\Crystal-Falls-West_Water-Recim-Plant_157-045-20\Const-Plans\1st-Set\CFW-Sec1_WRP_Sh-C6_Yard-Piping.dwg

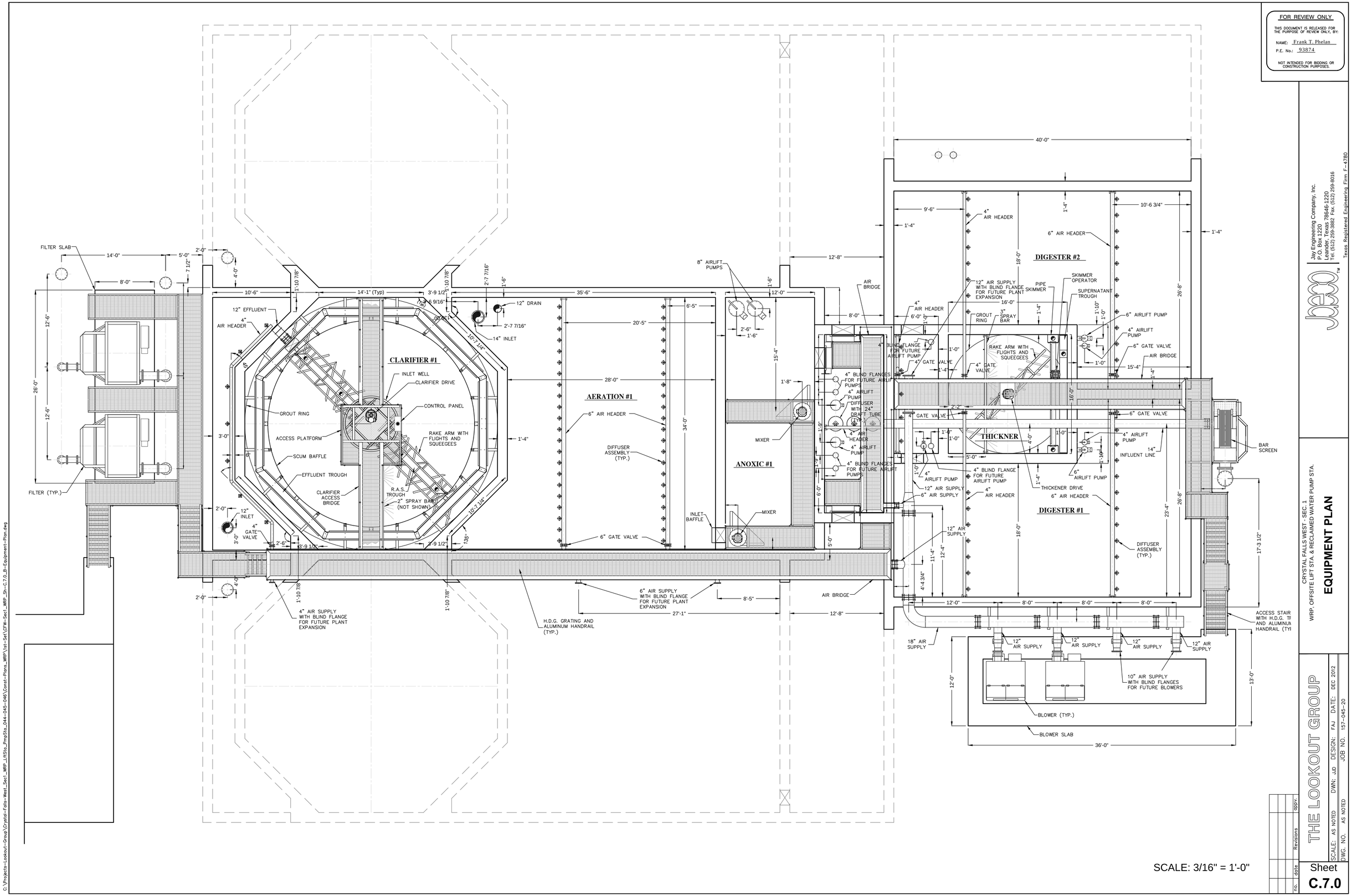

SCALE: 3/16" = 1'-0"

FOR REVIEW ONLY

THIS DOCUMENT IS RELEASED FOR THE PURPOSE OF REVIEW ONLY, BY:

NAME: Frank T. Phelan

P.E. No.: 93874

NOT INTENDED FOR BIDDING OR CONSTRUCTION PURPOSES.

Jay Engineering Company, Inc.
P.O. Box 1220
Leander, Texas 78646-1220
Tel: (512) 259-3882 Fax: (512) 259-9016
Texas Registered Engineering Firm F-4780

CRYSTAL FALLS WEST - SEC. 1

WRP, OFFSITE LIFT STA. & RECLAIMED WATER PUMP STA.

EQUIPMENT PLAN

THE LOOKOUT GROUP

SCALE: AS NOTED | DWN: JJD | DESIGN: FAJ | DATE: DEC 2012

DWG. NO. AS NOTED | JOB NO. 157-045-20

no.	date	Revisions	appv.

Sheet

C.7.0

C:\Projects-Lookout-Group\Crystal-Falls-West_Sec1_WRP_LiftSta_PmpSta_044-045-046\Const-Plans_WRP\1st-Set\CFW-Sec1_WRP_Sh-C.7.0_B-Equipment-Plan.dwg

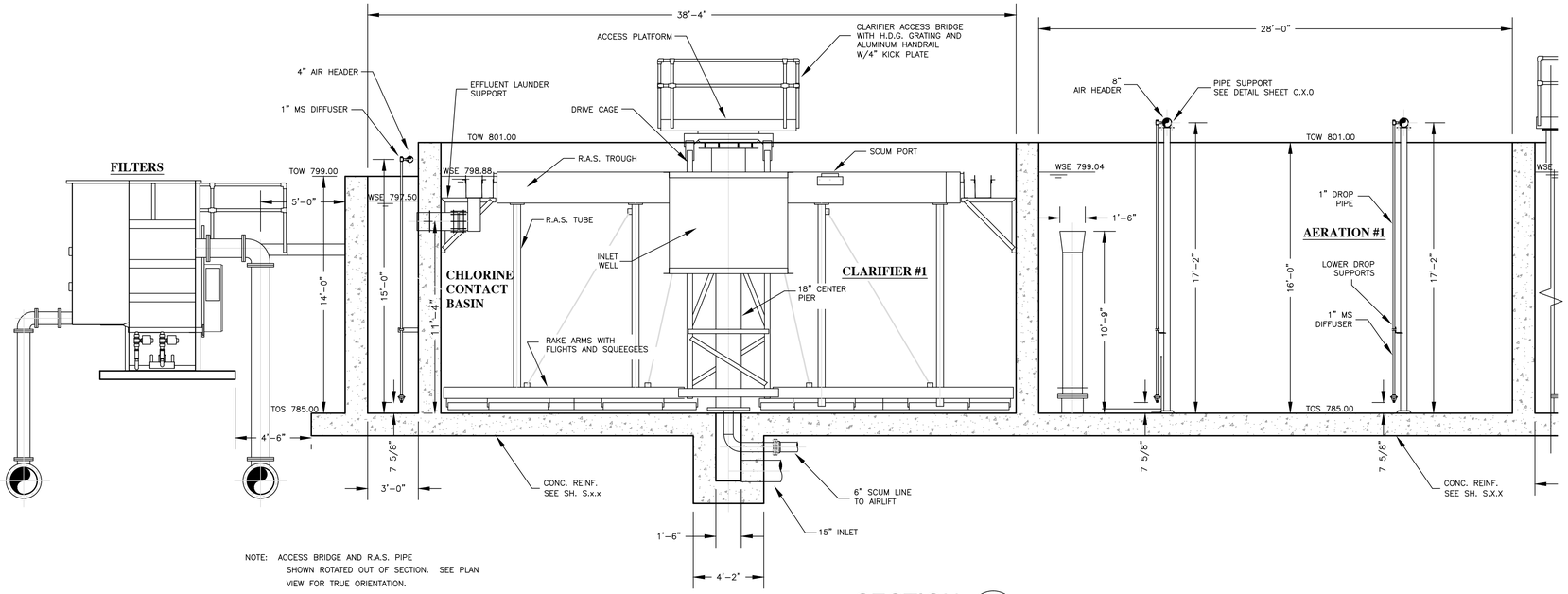

NOTE: ACCESS BRIDGE AND R.A.S. PIPE SHOWN ROTATED OUT OF SECTION. SEE PLAN VIEW FOR TRUE ORIENTATION.

SECTION A / C.7.0
scale: 1/4" = 1'-0"

NOTES:

1. MANUFACTURER OF TREATMENT EQUIPMENT SHALL BE RESPOSIBLE FOR ADEQUATE SIZING OF GATES, PIPES, WEIRS AND OPENINGS TO PASS FLOWS REQUIRED AND AS SHOWN IN HYDRAULIC PROFILE OR SPECIFICATIONS.
2. ALL HOSE BIBS SHALL BE ⅝" UNLESS OTHERWISE STATED. VACUUM BREAKERS TO BE INSTALLED ON ALL HOSE BIBS.
3. ALL EXPOSED NON-POTABLE WATER PIPING SHALL BE COLOR-CODED AND SIGNED PER TCEQ RULES.
4. WALKWAYS AND STAIRS TO HAVE KICK PLATES PER OSHA REQUIREMENTS (TYP. ALL WALKWAYS AND STAIRS)
5. ALL DEPTHS OF COVER FOR PIPES UNDER SLABS TO BE PER EQUIPMENT MANUFACTURERS RECOMMENDATIONS, UNLESS NOTED OTHERWISE.

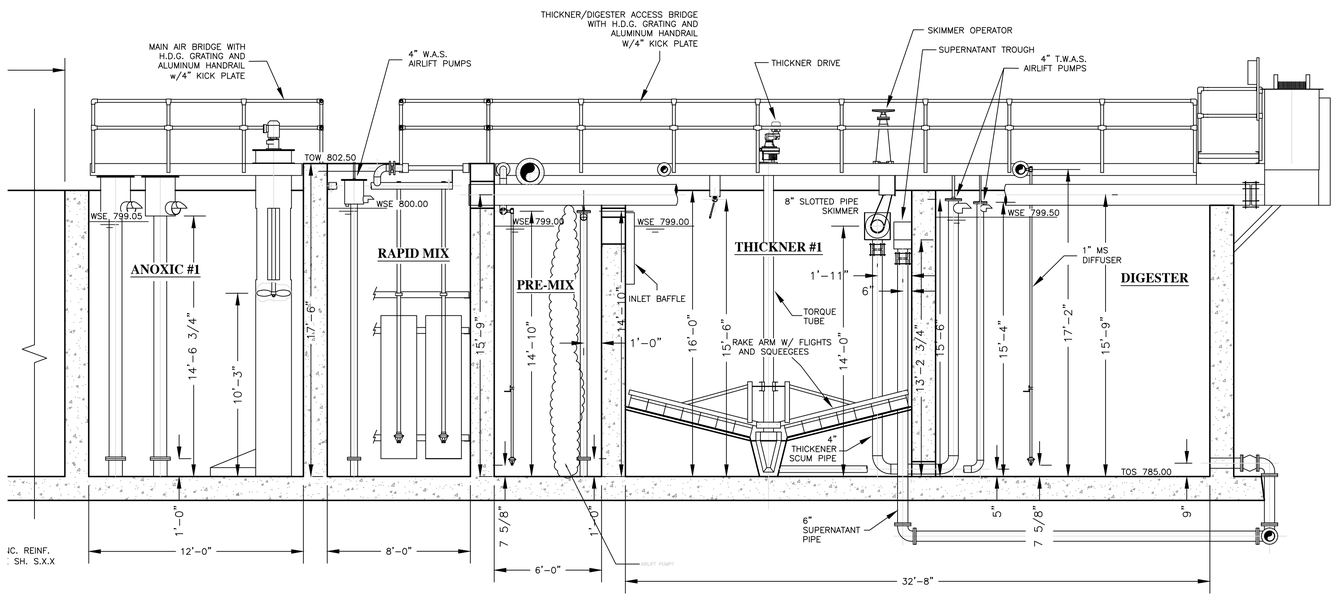

SECTION A / C.7.0
scale: 1/4" = 1'-0"

FOR REVIEW ONLY

THIS DOCUMENT IS RELEASED FOR THE PURPOSE OF REVIEW ONLY, BY:

NAME: Frank T. Phelan

P.E. No.: 93874

NOT INTENDED FOR BIDDING OR CONSTRUCTION PURPOSES.

Jay Engineering Company, Inc.
P.O. Box 1220
Leander, Texas 78646-1220
Tel: (512) 259-3882 Fax: (512) 259-9016
Texas Registered Engineering Firm F-4780

CRYSTAL FALLS WEST - SEC. 1
WRP, OFFSITE LIFT STA. & RECLAIMED WATER PUMP STA.

EQUIPMENT MODULE SECTIONS & DETAILS

THE LOOKOUT GROUP

SCALE: AS NOTED DWN: JJD DESIGN: FAJ DATE: DEC 2012
DWG. NO. AS NOTED JOB NO. 157-045-20

no.	date	Revisions	appv.

Sheet
C.8.0

C:\Projects-Lookout-Group\Crystal-Falls-West_Sec1_WRP_LiftSta_PrepSta_044-045-046\Const-Plans_WRP\1st-Set\CFW-Sec1_WRP_Sh-C.8.0_Sections-Details.dwg

FOR REVIEW ONLY

THIS DOCUMENT IS RELEASED FOR THE PURPOSE OF REVIEW ONLY, BY:

NAME: Frank T. Phelan

P.E. No.: 93874

NOT INTENDED FOR BIDDING OR CONSTRUCTION PURPOSES.

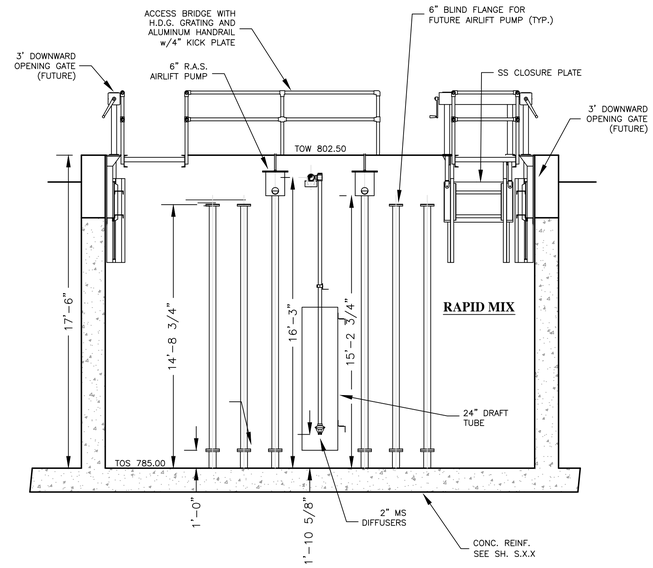

SECTION C / C.7.0
scale: 1/4" = 1'-0"

RAPID MIX FRONT

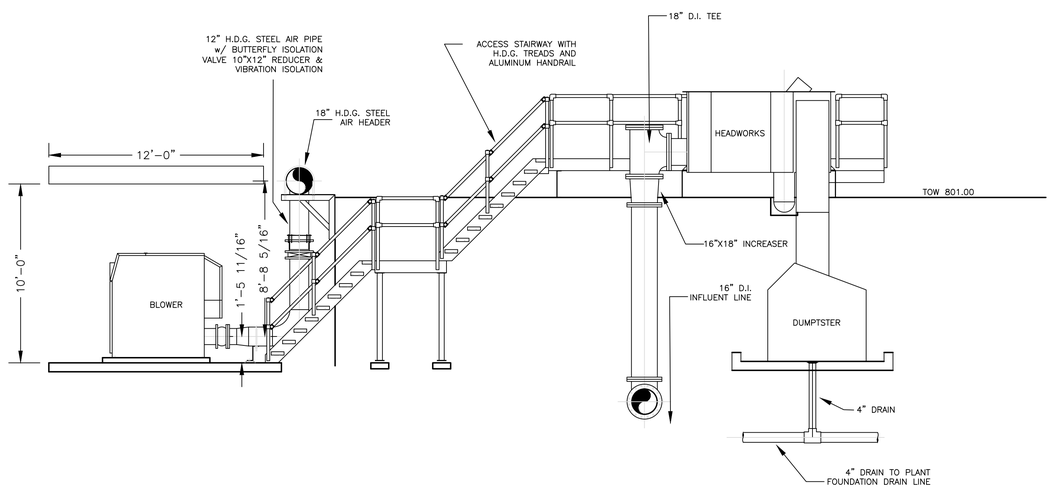

SECTION A / C.7.0
scale: 1/4" = 1'-0"

Jay Engineering Company, Inc.
P.O. Box 1220
Leander, Texas 78646-1220
Tel: (512) 259-3882 Fax: (512) 259-9016
Texas Registered Engineering Firm F-4780

CRYSTAL FALLS WEST - SEC. 1
WRP, OFFSITE LIFT STA. & RECLAIMED WATER PUMP STA.

EQUIPMENT MODULE SECTIONS & DETAILS

THE LOOKOUT GROUP

SCALE: AS NOTED DWN: JJD DESIGN: FAJ DATE: DEC 2012
DWG. NO. AS NOTED JOB NO. 157-045-20

no.	date	Revisions	appv.

Sheet
C.9.0

C:\Projects-Lookout-Group\Crystal-Falls-West_Sec1_WRP_LiftSta_PrepSta_044-045-046\Const-Plans_WRP\1st-Set\CFW-Sec1_WRP_Sh-C.8.0_Sections-Details.dwg

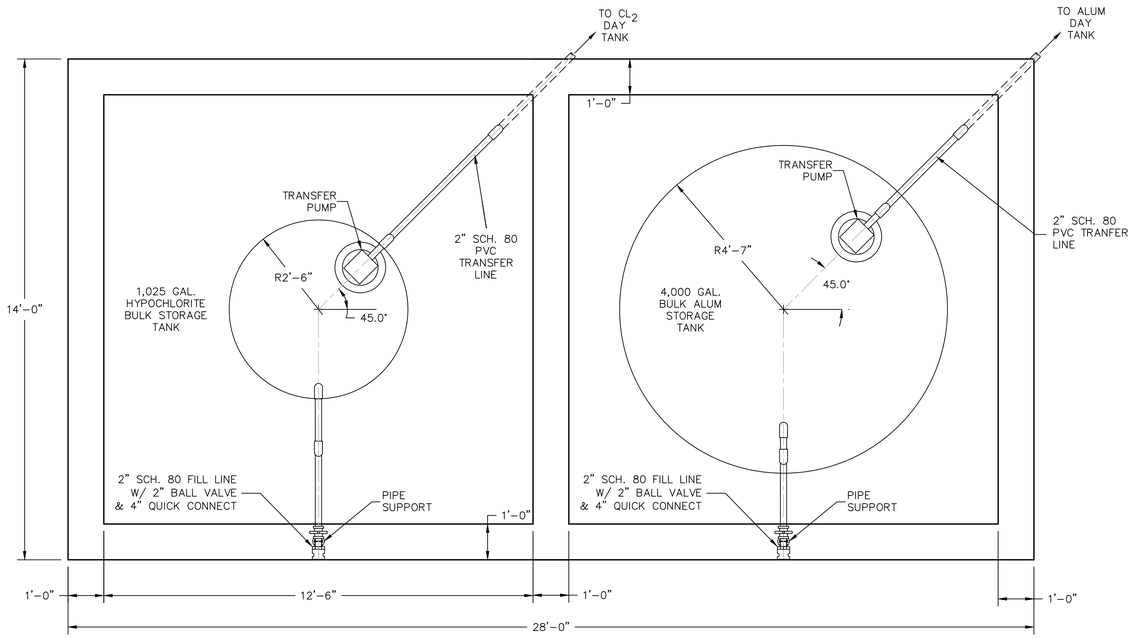

BULK STORAGE TANK PLAN

scale: 1/2" =1'-0"

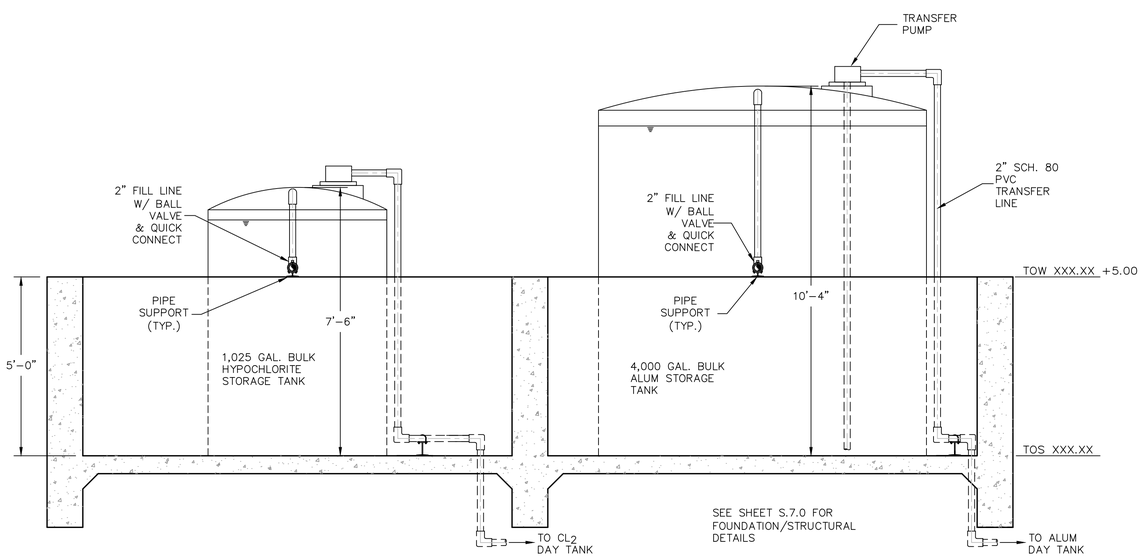

BULK STORAGE TANK ELEV.

scale: 1/2" =1'-0"

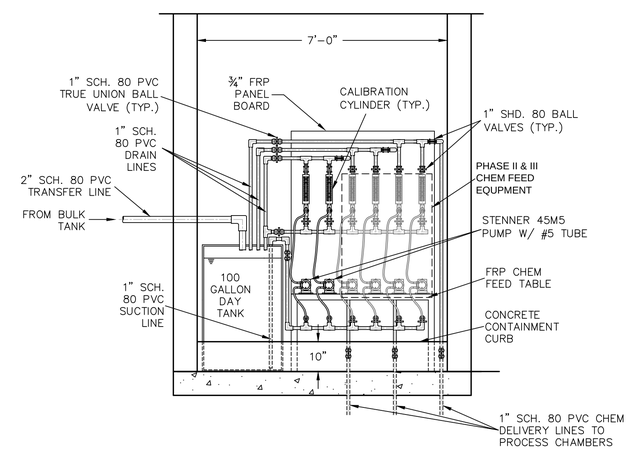

CHEM FEED EQUIP. DETAILS

scale: 1/2" =1'-0"

NOTE: CHEMCIAL FEED EQUIPMENT DETAILS ARE TYPICAL FOR BOTH HYPOCHLORITE AND ALUM FEED SYSTEMS.

CHEM FEED CONTROL SEQUENCE

1. CONTROL SEQUENCES FOR CHLORINE AND ALUM SYSTEMS ARE TO BE IDENTICAL.

2, LOW RANGE BASELINE FEED IS TO BE AUTOMATICALLY ENERGIZED BY LEAD PUMP CONTROL CIRCUIT SIGNAL FROM LIFT STATION #16 AND ONSITE LIFT STATION.

3. HIGH RANGE FEED IS TO BE AUTOMATICALLY ENERGIZED BY LAG PUMP CONTROL CIRCUIT SIGNAL FROM LIFT STATION #16 AND ONSITE LIFT STATION.

NOTES:

1. ALL CHEMICAL FEED PIPING TO BE 1" SCHEDULE 80 PVC PIPE UNLESS NOTED OTHERWISE.
2. SUPPLY A TOTAL OF THREE (3) STENNER 45M5 CHEMICAL FEED PUMPS, WITH THIRD PUMP AS SPARE.
4. DAY TANK TO BE FILLED VIA MOMETARY PUSH BUTTON CONTROL OF TRANSFER PUMP. PUSH BUTTON CONTROL TO BE MOUNTED ON FACE OF PUMP CONTROL PANEL IN CHEMICAL FEE PUMP ROOM.
5. FLOOR, WALLS AND CHEMCIAL CONTAINMENT CURBING IN CONTAINMENT AREA TO BE COATED WITH CHEMICAL RESISTANT EPOXY COATING (SHERWIN WILLIAMS, COR-COTE HCR) TO A WALL/CURB HEIGHT OF 10" ABOVE FINISH FLOOR ELEVATION.

FOR REVIEW ONLY

THIS DOCUMENT IS RELEASED FOR THE PURPOSE OF REVIEW ONLY, BY:

NAME: Frank T. Phelan

P.E. No.: 93874

NOT INTENDED FOR BIDDING OR CONSTRUCTION PURPOSES.

Jay Engineering Company, Inc.
P.O. Box 1220
Leander, Texas 78646-1220
Tel: (512) 259-9086 Fax: (512) 259-9016
Texas Registered Engineering Firm F-4780

CRYSTAL FALLS WEST - SEC. 1
WRP, OFFSITE LIFT STA. & RECLAIMED WATER PUMP STA.

CHEMICAL FEED AND BULK STORAGE SYSTEM DETAILS

THE LOOKOUT GROUP

SCALE: AS NOTED DWN: JJD DESIGN: FAJ DATE: DEC 2012
DWG. NO. AS NOTED JOB NO. 157-045-20

no.	date	Revisions	appv.

Sheet
C.10.0

C:\Projects-Lookout-Group\Crystal-Falls-West_Sec1_WRP_LiftSta_PmpSta_044-045-046\Const-Plans_WRP\1st-Set\CFW-Sec1_WRP_Sh-C.10.0_Chlorn-Non-Potable.dwg

FOR REVIEW ONLY

THIS DOCUMENT IS RELEASED FOR THE PURPOSE OF REVIEW ONLY, BY:

NAME: Frank T. Phelan

P.E. No.: 93874

NOT INTENDED FOR BIDDING OR CONSTRUCTION PURPOSES.

1. IF FREEZING IS A CONCERN AQUA-AEROBIC SYSTEMS RECOMMENDS THE FILTERS BE PLACED IN A HEATED BUILDING. IF A BUILDING IS NOT PROVIDED, ANY NECESSARY PROTECTION, INCLUDING BUT NOT LIMITED TO, HEAT TRACING AND INSULATION OF PUMPS AND PIPING, AS WELL AS PROTECTION AGAINST INTERNAL TANK FREEZING, SHALL BE PROVIDED BY THE INSTALLING CONTRACTOR.

2. THE FILTER CONTROL PANEL IS SHOWN IN THE STANDARD LOCATION. IF THE FILTER IS LOCATED OUTSIDE, THE CONTROL PANEL MAY BE RELOCATED TO THE SIDE OF THE FILTER FACING NORTH, TO LIMIT EXPOSING THE H.M.I. TO DIRECT SUNLIGHT.

3. THE GRAPHIC ELEMENTS OF THIS COMPUTER GENERATED DRAWING ARE DRAWN FULL SIZE. THE DIMENSIONS ARE ASSOCIATIVE. IF THE SIZE OF THE GRAPHIC ELEMENTS IS CHANGED THE DIMENSIONS WILL NOT BE CORRECT.

4. AN INFLUENT VALVE IS REQUIRED FOR ISOLATION / MAINTENCE OF THE FILTER UNIT. THE INFLUENT VALVE SHALL BE PROVIDED BY OTHERS AND INSTALLED BY OTHERS.

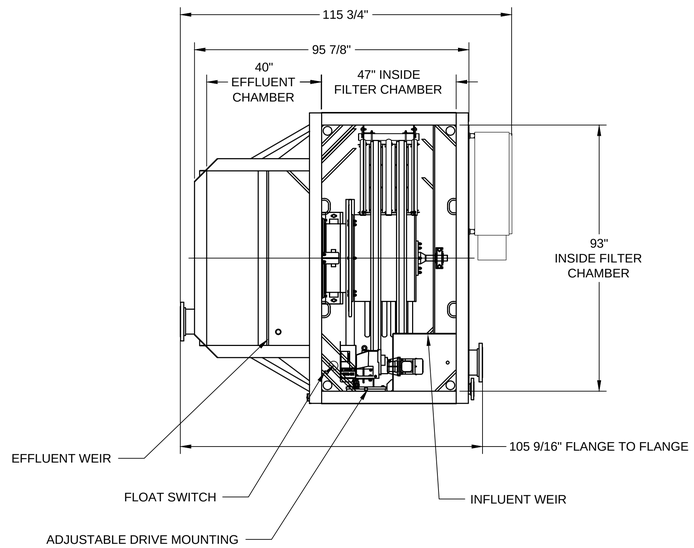

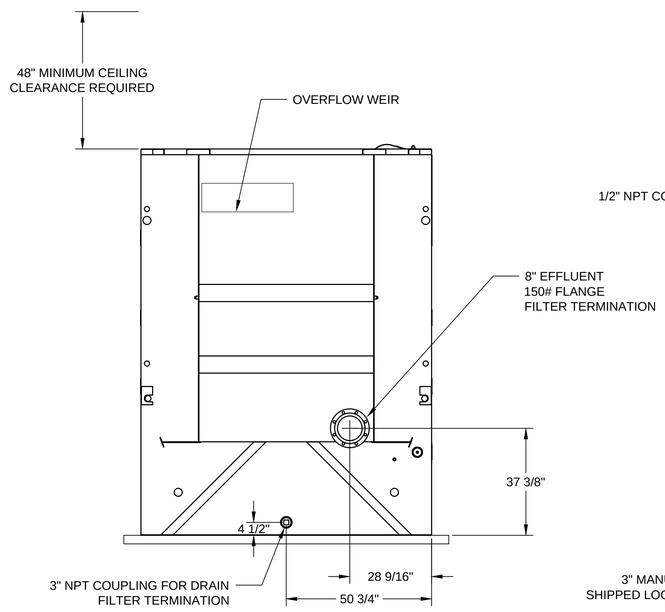

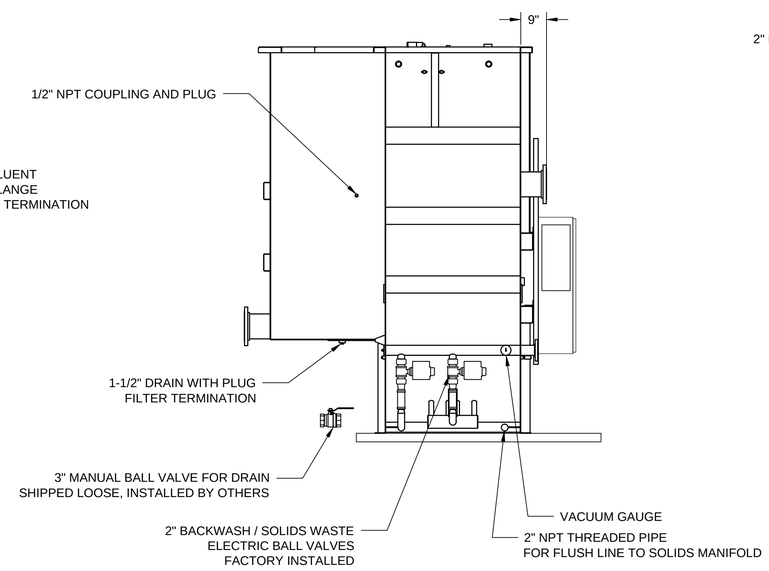

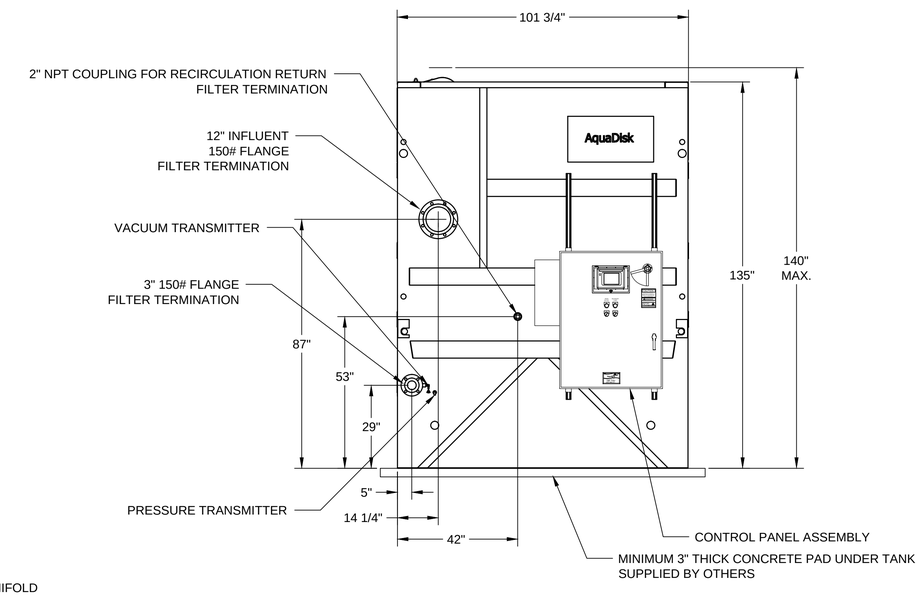

DRY WT (LBS)	OPER. WT. (LBS)
7,500	27,500

Jay Engineering Company, Inc.
P.O. Box 1220
Leander, Texas 78646-1220
Tel: (512) 259-3882 Fax: (512) 259-9016
Texas Registered Engineering Firm F-4780

CRYSTAL FALLS WEST - SEC. 1
WRP, OFFSITE LIFT STA. & RECLAIMED WATER PUMP STA.

FILTER DETAILS

THE LOOKOUT GROUP

SCALE: AS NOTED | DWN: JJD | DESIGN: FAJ | DATE: DEC 2012
DWG. NO. AS NOTED | JOB NO. 157-045-20

no.	date	Revisions	appv.

Sheet
C.11.0

C:\Projects-Lookout-Group\Crystal-Falls-West_Sec1_WRP_LiftSta_PmpSta_044-045-046\Const-Plans_WRP\1st-Set\CFW-Sec1_WRP_Sh-C11.0_Filter-Details1.dwg

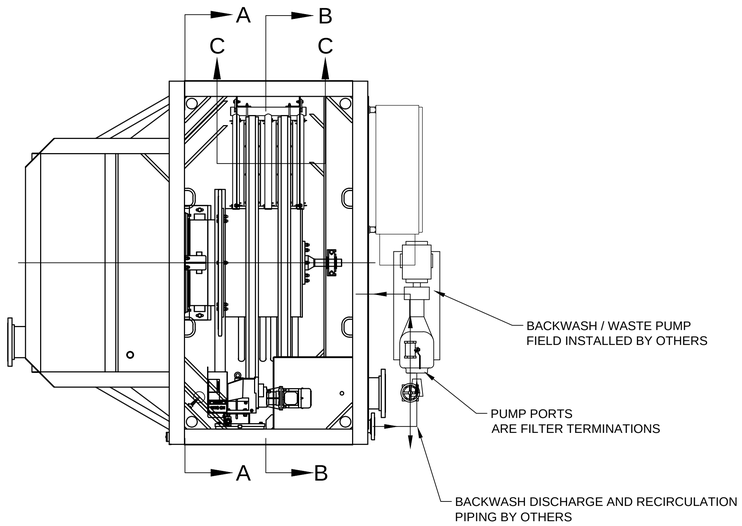

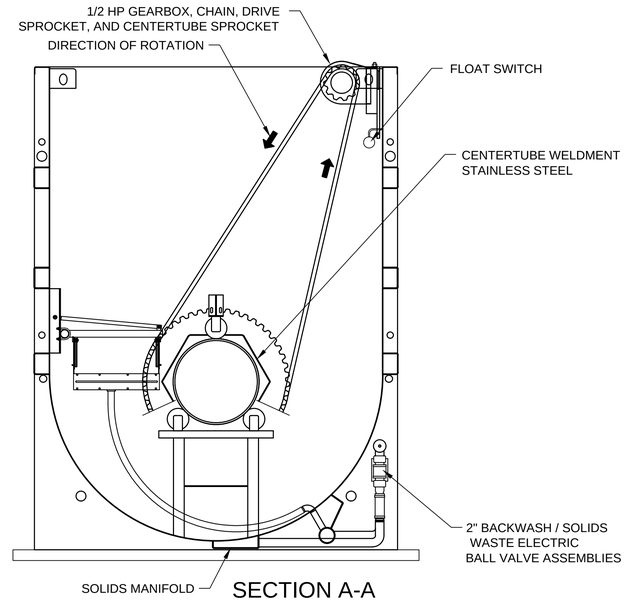

SECTION A-A

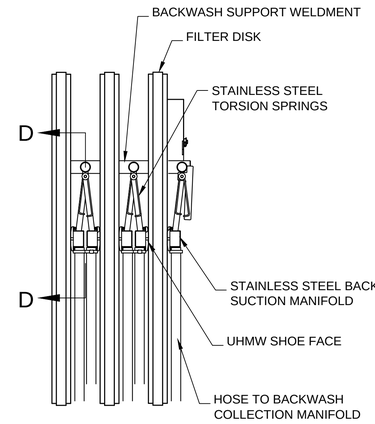

SECTION C-C
NOT TO SCALE

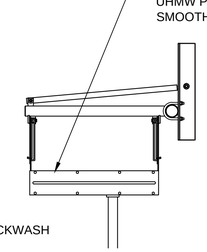

SECTION D-D
NOT TO SCALE

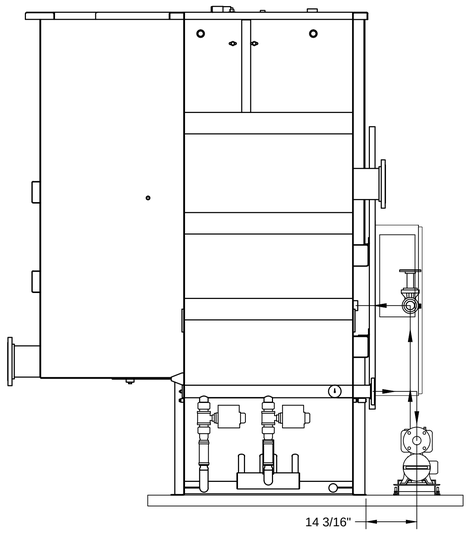

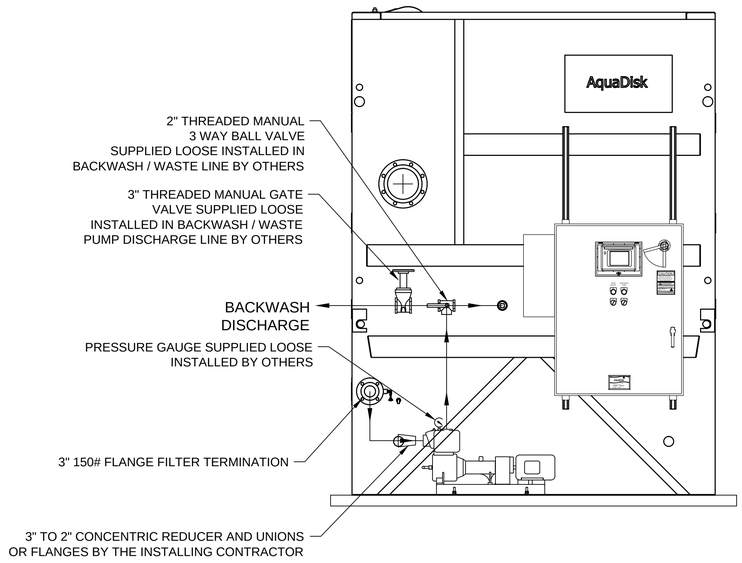

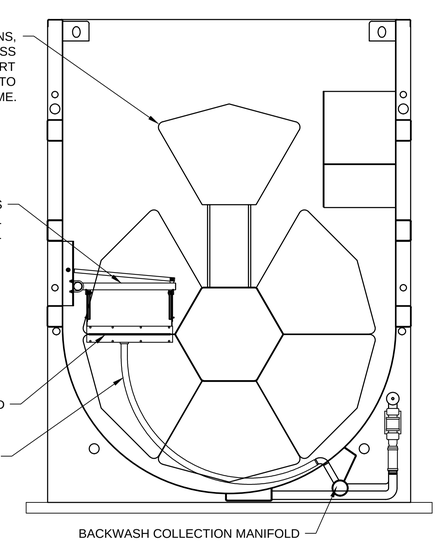

SECTION B-B

1 ALL EXTERNAL PIPING AND FITTINGS SHALL BE PROVIDED BY OTHERS ACTUAL PIPING LAYOUT AND PUMP LOCATION TO BE DETERMINED BY OTHERS WHEN THREADED OR WELDED PIPE IS USED IN LIEU OF FLANGED PIPE, UNIONS SHALL BE USED AT EACH PUMP AND VALVE CONNECTION TO FACILITATE SERVICE.

2 2 H.P. BACKWASH / WASTE PUMP CONNECTIONS ARE 2" N.P.T. BACKWASH / WASTE PIPING IS 3" DIAMETER. 3" TO 2" CONCENTRIC REDUCER FITTINGS SHALL BE PROVIDED AND INSTALLED BY OTHERS AT EACH PUMP PORT.

3 THE STANDARD BACKWASH / WASTE PUMP PROVIDES 23.2 FEET OF TOTAL HEAD AT A FLOW RATE OF 130 GPM. THE SUCTION SIDE PIPING REQUIRES APPROXIMATELY 11 FEET OF THIS HEAD. THIS LEAVES APPROXIMATELY 12 FEET (5 PSIG) FOR THE DISCHARGE SIDE. THE DISCHARGE DIAMETER, EQUIVALENT LENGTH, AND VERTICAL LIFT MUST RESULT IN A HEAD LOSS LESS THAN 12 FEET. INSTALLATIONS WITH MORE THAN ONE BACKWASH / WASTE PUMP MUST ACCOMODATE ALL BACKWASH / WASTE PUMPS RUNNING SIMULTANEOUSLY WITHOUT EXCEEDING 12 FEET OF DISCHARGE HEAD.

FOR INSTALLATIONS THAT REQUIRE MORE DISCHARGE HEAD, ALTERNATIVE PUMPS ARE AVAILABLE. PLEASE CONSULT AASI ENGINEERING TO VERIFY THE SUITABILITY OF THE DISCHARGE PIPING OR FOR SPECIAL PUMP REQUIREMENTS.

FOR REVIEW ONLY

THIS DOCUMENT IS RELEASED FOR THE PURPOSE OF REVIEW ONLY, BY:

NAME: Frank T. Phelan

P.E. No.: 93874

NOT INTENDED FOR BIDDING OR CONSTRUCTION PURPOSES.

Jay Engineering Company, Inc.
P.O. Box 1220
Leander, Texas 78646-1220
Tel: (512) 259-3882 Fax: (512) 259-9016
Texas Registered Engineering Firm F-4780

CRYSTAL FALLS WEST - SEC. 1
WRP, OFFSITE LIFT STA. & RECLAIMED WATER PUMP STA.

FILTER DETAILS

THE LOOKOUT GROUP

SCALE: AS NOTED | DWN: JJD | DESIGN: FAJ | DATE: DEC 2012
DWG. NO. AS NOTED | JOB NO. 157-045-20

no.	date	Revisions	appv.

Sheet
C.12.0

c:\Projects-Lookout-Group\Crystal-Falls-West_Sec1_WRP_LiftSta_PropSta_044-045-046\Const-Plans_WRP\1st-Set\CFW-Sec1_WRP_Sh-C12.0_Filter-Detail2.dwg

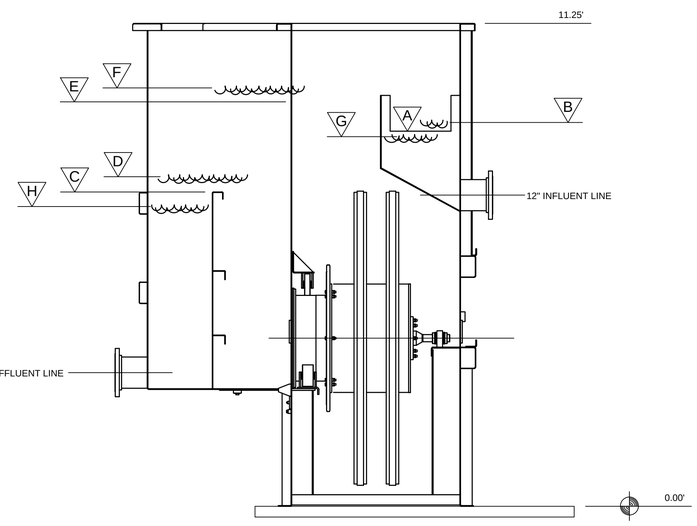

HYDRAULIC PROFILE
BASED UPON AVERAGE FLOW RATE OF 3.25 GPM PER SQUARE FOOT (0.5 MGD)
BASED UPON MAXIMUM FLOW RATE OF 6.5 GPM PER SQUARE FOOT (1.0 MGD)

ELEVATION

A	8.74'	INFLUENT WEIR ELEVATION
B	9.04'	NAPPE OVER INFLUENT WEIR AVERAGE FLOW
	9.21'	NAPPE OVER INFLUENT WEIR MAXIMUM FLOW
C	7.32'	EFFLUENT WEIR ELEVATION
D	7.45'	NAPPE OVER EFFLUENT WEIR AVERAGE FLOW
	7.53'	NAPPE OVER EFFLUENT WEIR MAXIMUM FLOW
E	9.42'	OVERFLOW WEIR ELEVATION
F	9.61'	NAPPE OVER OVERFLOW WEIR AVERAGE FLOW
	9.73'	NAPPE OVER OVERFLOW WEIR MAXIMUM FLOW
G	8.70'	BACKWASH INITIATE LEVEL
H	6.82'	MAXIMUM AVAILABLE LIQUID LEVEL FOR EFFLUENT CONVEYANCE

WEIR LENGTHS
INFLUENT = 1.42'
EFFLUENT = 5.08'
OVERFLOW = 2.67'

FOR REVIEW ONLY

THIS DOCUMENT IS RELEASED FOR THE PURPOSE OF REVIEW ONLY, BY:

NAME: Frank T. Phelan
P.E. No.: 93874

NOT INTENDED FOR BIDDING OR CONSTRUCTION PURPOSES.

Jay Engineering Company, Inc.
P.O. Box 1220
Leander, Texas 78646-1220
Tel: (512) 259-3882 Fax: (512) 259-8016
Texas Registered Engineering Firm F-4780

CRYSTAL FALLS WEST - SEC. 1
WRP, OFFSITE LIFT STA. & RECLAIMED WATER PUMP STA.

FILTER DETAILS

THE LOOKOUT GROUP

SCALE: AS NOTED DWN: JJD DESIGN: FAJ DATE: DEC 2012
DWG. NO. AS NOTED JOB NO. 157-045-20

no.	date	Revisions	appv.

Sheet
C.13.0

C:\Projects-Lookout-Group\Crystal-Falls-West_Sec1_WRP_JJ(Sta_PmpSta_044-045-046)\Const-Plans_WRP\1st-Set\CFW-Sec1_WRP_Sh-C.13.0_Filter-Details3.dwg

FOR REVIEW ONLY

THIS DOCUMENT IS RELEASED FOR THE PURPOSE OF REVIEW ONLY, BY:

NAME: Frank T. Phelan

P.E. No.: 93874

NOT INTENDED FOR BIDDING OR CONSTRUCTION PURPOSES.

SYMBOL KEY

	MOTOR		CIRCUIT BREAKER		ELECTRICAL DISCONNECT	VFD	VARIABLE FREQUENCY DRIVE		TRANSDUCER		STARTER CONTACTOR
M	MOTOR OPERATED VALVE		TRANSFORMER		MOTOR OVERLOAD	P	PNEUMATIC OPERATED VALVE		FUSE		FLOAT SWITCH

NOTE: SOME SYMBOLS MAY NOT BE APPLICABLE

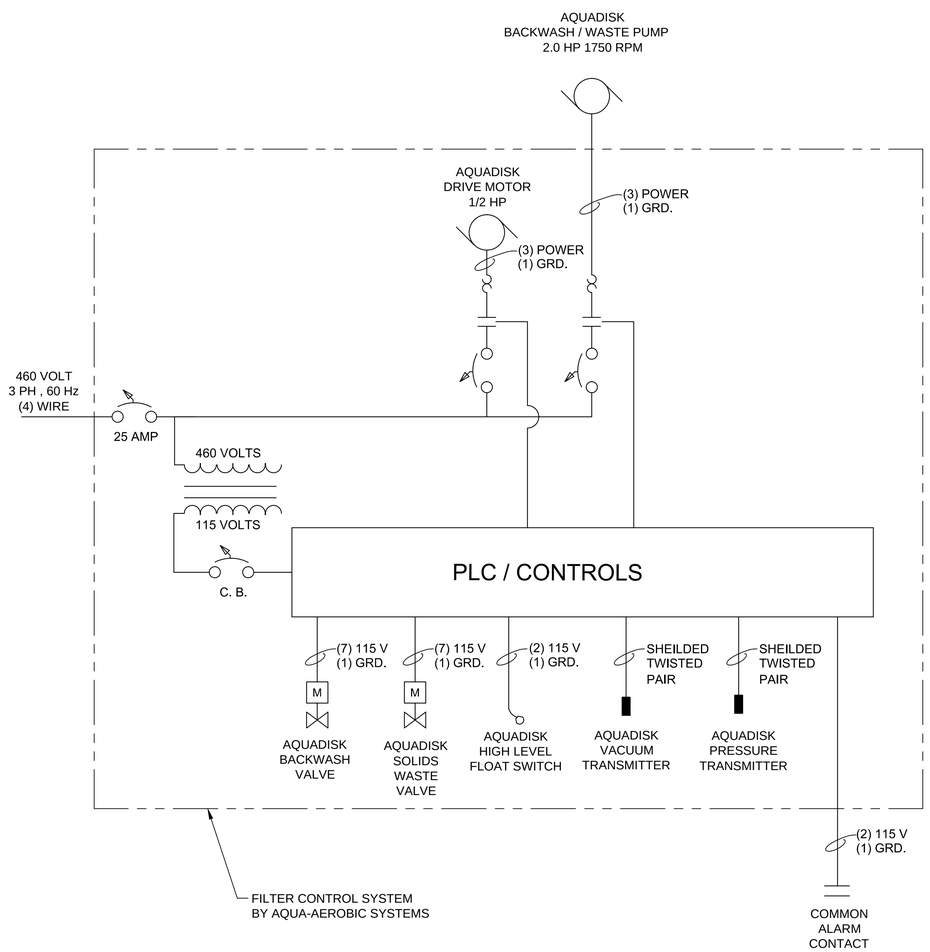

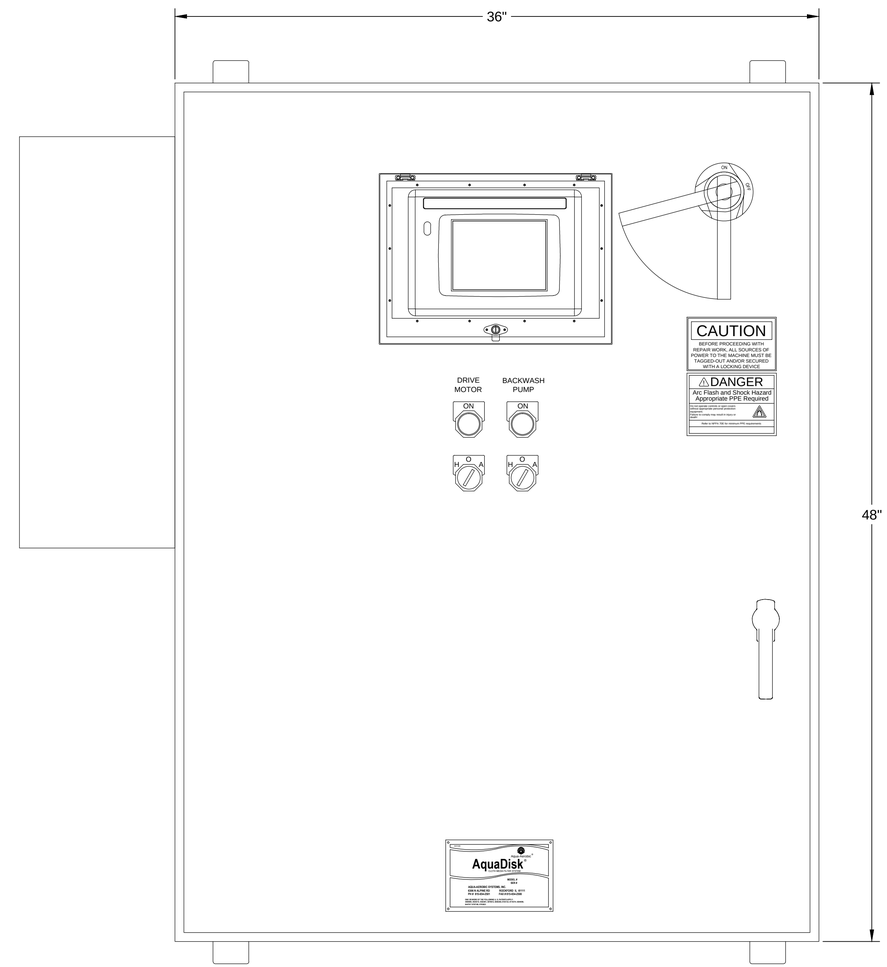

1 CONTROL PANEL
ENCLOSURE NEMA 4X WALL MOUNTED TYPE STAINLESS STEEL
FACTORY ASSEMBLED ON THE FILTER, DISASSEMBLED AND SHIPPED LOOSE.
REASSEMBLED ON-SITE BY CONTRACTOR.
IF THE FILTER IS LOCATED OUTSIDE, THE CONTROL PANEL
MAY BE RELOCATED TO THE SIDE OF THE FILTER
FACING NORTH TO LIMIT THE H.M.I. EXPOSURE TO DIRECT SUNLIGHT.

2 CONTROL PANEL SIZE
48" HEIGHT X 36" WIDE X 12" DEEP

3 (1) CONTROL PANEL PER FILTER

Jay Engineering Company, Inc.
P.O. Box 1220
Leander, Texas 78646-1220
Tel: (512) 259-3882 Fax: (512) 259-9016
Texas Registered Engineering Firm F-4780

CRYSTAL FALLS WEST - SEC. 1
WRP, OFF-SITE LIFT STA. & RECLAIMED WATER PUMP STA.

FILTER DETAILS

THE LOOKOUT GROUP

SCALE: AS NOTED DWN: JJD DESIGN: FAJ DATE: DEC 2012
DWG. NO. AS NOTED JOB NO. 157-045-20

no.	date	Revisions	appv.

Sheet
C.14.0

C:\Projects-Lookout-Group\Crystal-Falls-West_Sec1_WRP_LftSta_PmpSta_044-045-046\Const-Plans_WRP\1st-Set\CFW-Sec1_WRP_Sh-C14.0_Filter-Details4.dwg

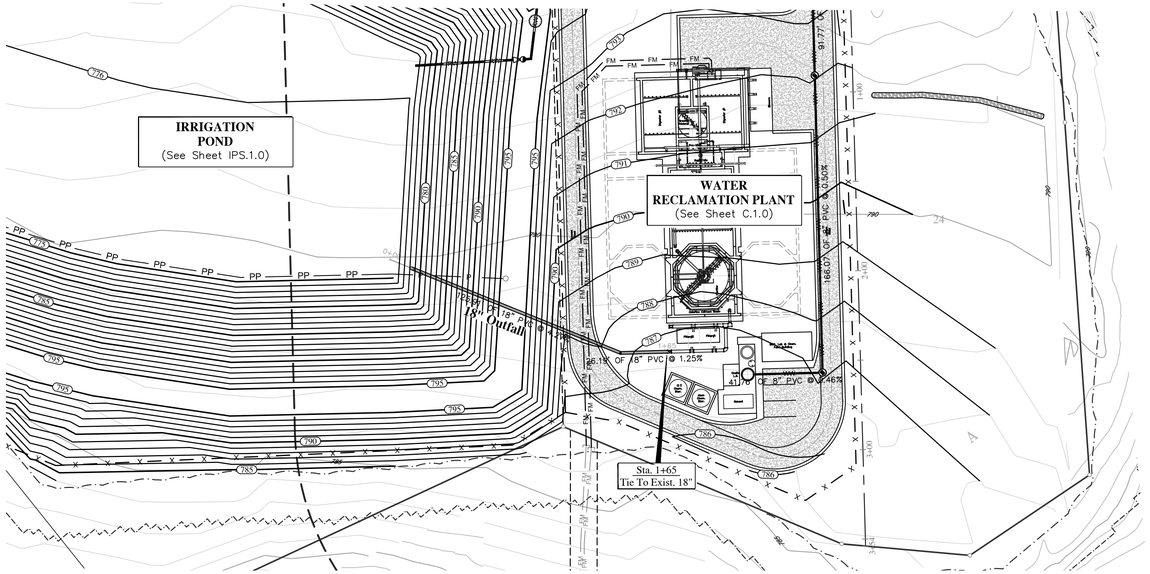

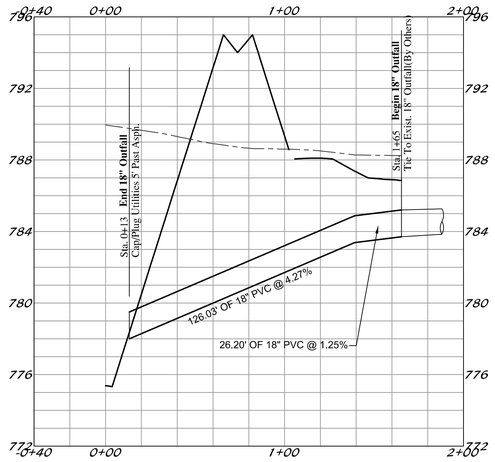

FOR REVIEW ONLY

THIS DOCUMENT IS RELEASED FOR THE PURPOSE OF REVIEW ONLY, BY:

NAME: Frank T. Phelan

P.E. No.: 93874

NOT INTENDED FOR BIDDING OR CONSTRUCTION PURPOSES.

Jay Engineering Company, Inc.
P.O. Box 1220
Lakeway, Texas 78646-1220
Tel: (512) 259-3882 Fax: (512) 259-8016
Texas Registered Engineering Firm F-4780

WRP, OFFSITE LIFT STA. & RECLAIMED WATER PUMP STA.
CRYSTAL FALLS WEST - SEC. 1

OUTFALL PLAN & PROFILE

THE LOOKOUT GROUP

SCALE: AS NOTED DWN: JJD DESIGN: FAJ DATE: OCT 2012

DWG. NO. AS NOTED JOB NO. 157-045-20

no.	date	Revisions	appv.

Sheet
C.15.0

C:\Projects-Lookout-Group\Crystal-Falls-West_Sec1_WRP_LftSta_PmpSta_044-045-046\Const-Plans_WRP\1st-Set\CFW-Sec1_WRP_Sh-C.15.0_Outfall-P&P.dwg

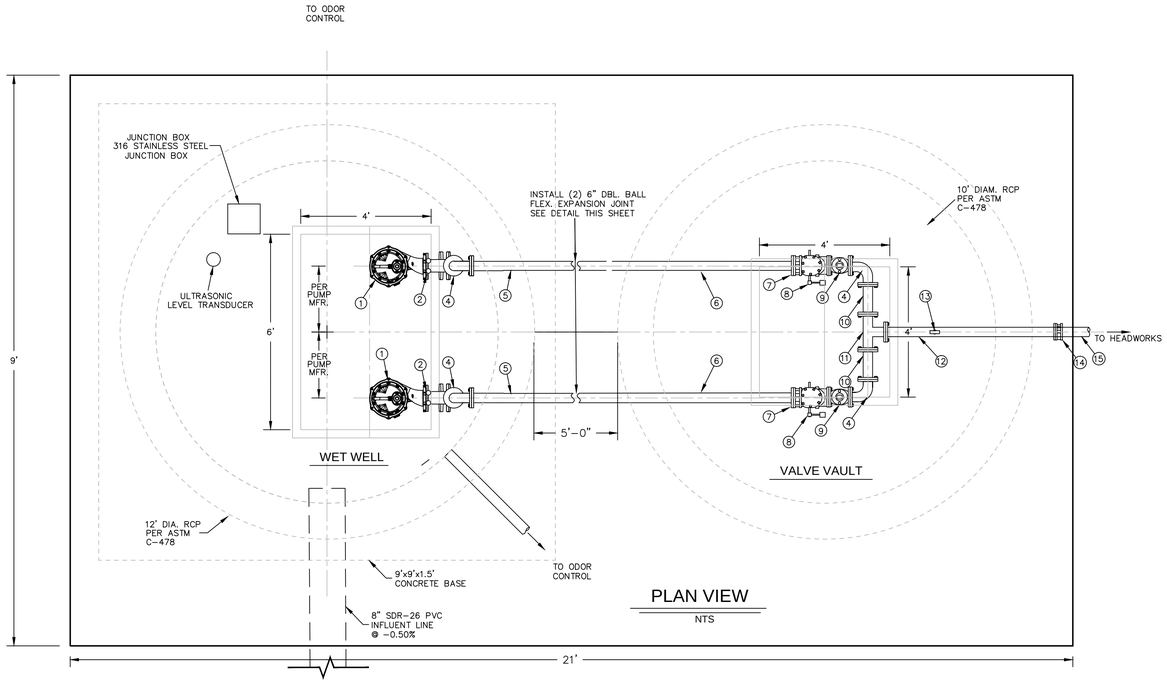

PLAN VIEW

NTS

GENERAL NOTES:

1. MANUFACTURER OF TREATMENT EQUIPMENT SHALL BE RESPONSIBLE FOR ADEQUATE SIZING OF GATES, PIPES, WEIRS AND OPENINGS TO PASS FLOWS REQUIRED AND AS SHOWN IN HYDRAULIC PROFILE OR SPECIFICATIONS.
2. ALL HOSE BIBS SHALL BE ⅝" UNLESS OTHERWISE STATED. VACUUM BREAKERS TO BE INSTALLED ON ALL HOSE BIBS.
3. ALL EXPOSED NON-POTABLE WATER PIPING SHALL BE COLOR-CODED AND SIGNED PER TCEQ RULES.
4. WALKWAYS AND STAIRS TO HAVE KICK PLATES PER OSHA REQUIREMENTS (TYP. ALL WALKWAYS AND STAIRS)
5. ODOR CONTROLS PER DETAILS SHEET XX.

STRUCTURAL NOTES

1. BACKFILL WET WELL WITH APPROVED GRANULAR MATERIAL HAVING A PI BETWEEN 4 &15. COMPACT IN 12" LIFTS.
2. COMPACT STRUCTURAL FILL IN 8" LIFTS TO 95% MAX. DENSITY PER TEX 113-E. MOISTURE CONTENT WITHIN 2% OPTIMUM, PER STANDARD PROCTOR(ASTM D 698).
3. THE TOP 24" OF FILL TO BE LOW PERMEABILITY, LOW PLASTICITY FILL.

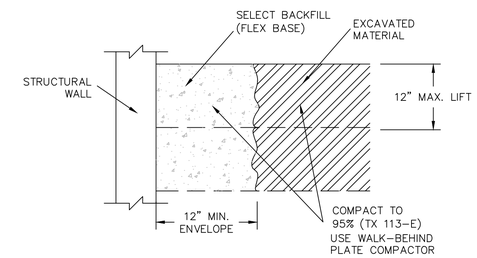

BACKFILL DETAIL

(ALL WET WELLS, TYP.)

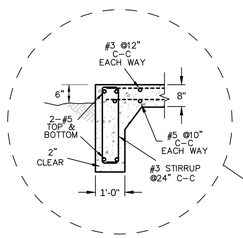

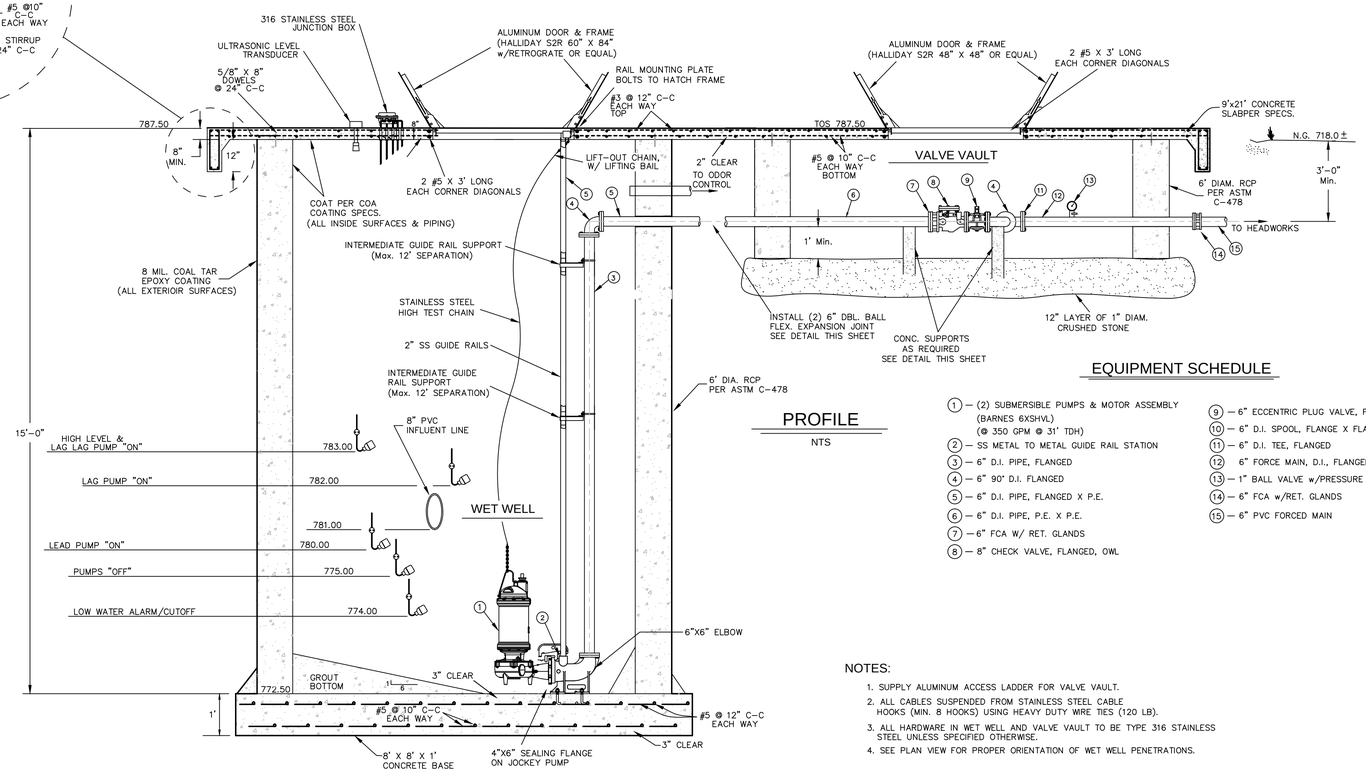

PROFILE

NTS

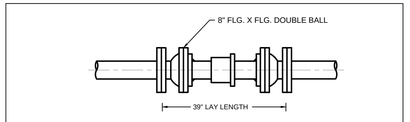

FLEX. EXPANSION JOINT DETAIL

NTS

EQUIPMENT SCHEDULE

1. — (2) SUBMERSIBLE PUMPS & MOTOR ASSEMBLY (BARNES 6XSHVL) (@ 350 GPM @ 31' TDH)
2. — SS METAL TO METAL GUIDE RAIL STATION
3. — 6" D.I. PIPE, FLANGED
4. — 6" 90° D.I. FLANGED
5. — 6" D.I. PIPE, FLANGED X P.E.
6. — 6" D.I. PIPE, P.E. X P.E.
7. — 6" FCA W/ RET. GLANDS
8. — 8" CHECK VALVE, FLANGED, OWL
9. — 6" ECCENTRIC PLUG VALVE, FLANGED
10. — 6" D.I. SPOOL, FLANGE X FLANGE
11. — 6" D.I. TEE, FLANGED
12. 6" FORCE MAIN, D.I., FLANGED
13. — 1" BALL VALVE w/PRESSURE GAUGE (0-30 PSI)
14. — 6" FCA w/RET. GLANDS
15. — 6" PVC FORCED MAIN

NOTES:

1. SUPPLY ALUMINUM ACCESS LADDER FOR VALVE VAULT.
2. ALL CABLES SUSPENDED FROM STAINLESS STEEL CABLE HOOKS (MIN. 8 HOOKS) USING HEAVY DUTY WIRE TIES (120 LB).
3. ALL HARDWARE IN WET WELL AND VALVE VAULT TO BE TYPE 316 STAINLESS STEEL UNLESS SPECIFIED OTHERWISE.
4. SEE PLAN VIEW FOR PROPER ORIENTATION OF WET WELL PENETRATIONS.

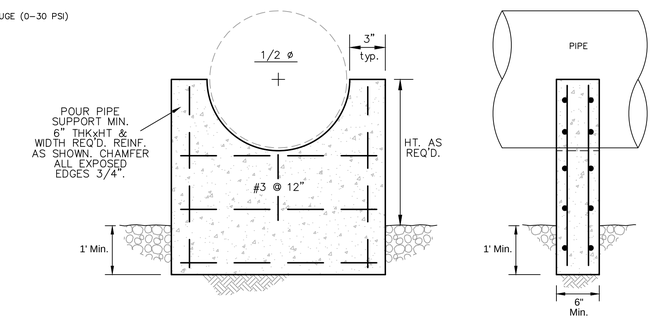

CONC. SUPPORT

FOR REVIEW ONLY

THIS DOCUMENT IS RELEASED FOR THE PURPOSE OF REVIEW ONLY, BY:

NAME: Frank T. Phelan

P.E. No.: 93874

NOT INTENDED FOR BIDDING OR CONSTRUCTION PURPOSES.

Jay Engineering Company, Inc.
P.O. Box 1220
Leander, Texas 78646-1220
Tel. (512) 259-3882 Fax. (512) 259-8016
Texas Registered Engineering Firm F-4780

WRP, OFFSITE LIFT STA. & RECLAIMED WATER PUMP STA.
CRYSTAL FALLS WEST - SEC. 1

ON-SITE LIFT STATION PLAN & PROFILE

THE LOOKOUT GROUP

SCALE: AS NOTED | DWN: JJD | DESIGN: FAJ | DATE: OCT 2012
DWG. NO. AS NOTED | JOB NO. 157-045-20

No.	date	Revisions	dpv.

Sheet C.16.0

C:\Projects-Lookout-Group\Crystal-Falls-West_Sec1_WRP_LiftSta_PmpSta_044-045-046\Const-Plans_WRP\1st-Set\CFW-Sec1_WRP_Sh-C16.0_On-site-Lift-Sta-P&P.dwg

NOTES:

1. MANUFACTURER OF TREATMENT EQUIPMENT SHALL BE RESPOSIBLE FOR ADEQUATE SIZING OF GATES, PIPES, WEIRS AND OPENINGS TO PASS FLOWS REQUIRED AND AS SHOWN IN HYDRAULIC PROFILE OR SPECIFICATIONS.

2. ALL HOSE BIBS SHALL BE ⅝" UNLESS OTHERWISE STATED. VACUUM BREAKERS TO BE INSTALLED ON ALL HOSE BIBS.

3. ALL EXPOSED NON-POTABLE WATER PIPING SHALL BE COLOR-CODED AND SIGNED PER TCEQ RULES.

4. WALKWAYS AND STAIRS TO HAVE KICK PLATES PER OSHA REQUIREMENTS (TYP. ALL WALKWAYS AND STAIRS)

FOR REVIEW ONLY

THIS DOCUMENT IS RELEASED FOR THE PURPOSE OF REVIEW ONLY. BY:

NAME: Frank T. Phelan

P.E. No.: 93874

NOT INTENDED FOR BIDDING OR CONSTRUCTION PURPOSES.

NOTES:
1. SEE YARD PIPING PLAN SHEET FOR CHEMICAL FEED LINE DETAILS.

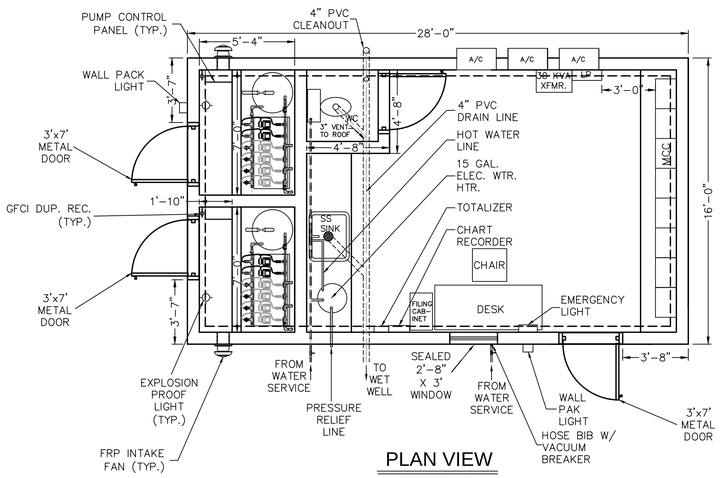

PLAN VIEW

SCALE: 3/8"=1'-0"

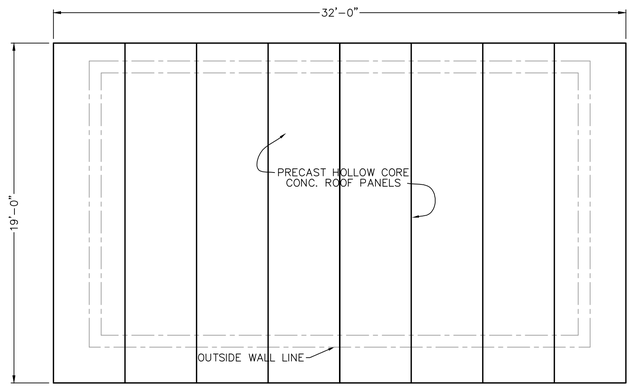

ROOF PLAN

SCALE: 3/8"=1'-0"

ROOF PANEL NOTES:

1. GROUT BETWEEN PANELS PER MFR. SPECS.
2. GROUT AND WIPE EDGES OF ROOFING PANELS PER MFR. SPECS.
3. FLASHING SHALL BE INSTALLED AROUND OUTSIDE EDGES WITH FISHTAIL FACIA.
4. ACHIEVE ¼" PER FOOT SLOPE W/ TAPERED INSULATIONTON.
5. ROOFING SYSTEM TO BE HEAT-WELDED, REINFORCED TPO MEMBRANE, 60 MIL, GENFLEX OR APPROVED EQUAL INSTALLED PER MFR. SPECS.
4. SEE SHEET S.6.0 FOR ROOF STRUCTURAL.

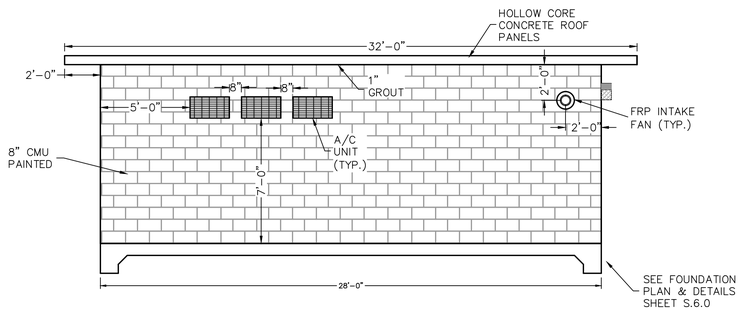

NORTH ELEVATION

SCALE: 3/8"=1'-0"

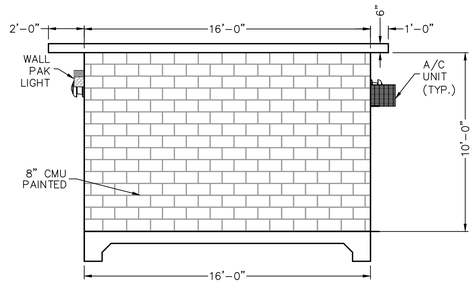

EAST ELEVATION

SCALE: 3/8"=1'-0"

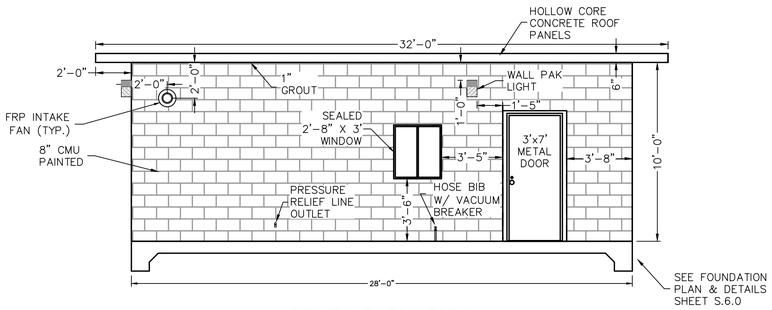

SOUTH ELEVATION

SCALE: 3/8"=1'-0"

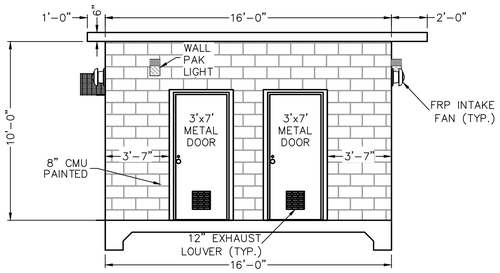

WEST ELEVATION

SCALE: 3/8"=1'-0"

12" SQ. EXH. LOUVER NEAR BOT.

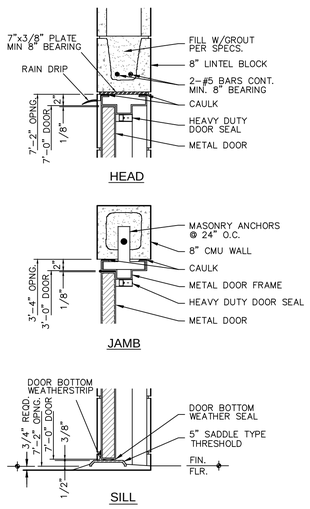

EXTERIOR DOOR DETAILS

NO SCALE

NOTES:

1. ALL ABOVE-GROUND NON-POTABLE WATER LINE SYSTEMS (EXCEPT CHLORINE SOLUTION DELIVERY LINE) TO BE H.D.G. STEEL, SCH. 40 THREADED FITTING PIPE, INSULATED PER SPECIFICATIONS. CHLORINE SOLUTION DELIVERY LINE TO BE 1" SCH. 80 PVC, INSULATED PER SPECIFICATIONS.

Jay Engineering Company, Inc.
P.O. Box 1220
Leander, Texas 78646-1220
Tel: (512) 259-9080 Fax: (512) 259-9016
Texas Registered Engineering Firm F-4780

CRYSTAL FALLS WEST - SEC. 1
WRP, OFFSITE LIFT STA. & RECLAIMED WATER PUMP STA.

LAB/MCC BUILDING & ELEVATIONS

THE LOOKOUT GROUP

SCALE: AS NOTED DWN: JJD DESIGN: FAJ DATE: DEC 2012

DWG. NO. AS NOTED JOB NO. 157-045-20

no.	date	Revisions	appv.

Sheet

C.17.0

C:\Projects-Lookout-Group\Crystal-Falls-West_Sec1_WRP_LiftSta_PmpSta_044-045-046\Const-Plans_WRP\1st-Set\CFW-Sec1_WRP_Sh-C.17.0_Lab-MCC-Bldg-Elevs.dwg

NOTES:

1. MANUFACTURER OF TREATMENT EQUIPMENT SHALL BE RESPOSIBLE FOR ADEQUATE SIZING OF GATES, PIPES, WEIRS AND OPENINGS TO PASS FLOWS REQUIRED AND AS SHOWN IN HYDRAULIC PROFILE OR SPECIFICATIONS.

2. ALL HOSE BIBS SHALL BE ⅝" UNLESS OTHERWISE STATED. VACUUM BREAKERS TO BE INSTALLED ON ALL HOSE BIBS.

3. ALL EXPOSED NON-POTABLE WATER PIPING SHALL BE COLOR-CODED AND SIGNED PER TCEQ RULES.

4. WALKWAYS AND STAIRS TO HAVE KICK PLATES PER OSHA REQUIREMENTS (TYP. ALL WALKWAYS AND STAIRS)

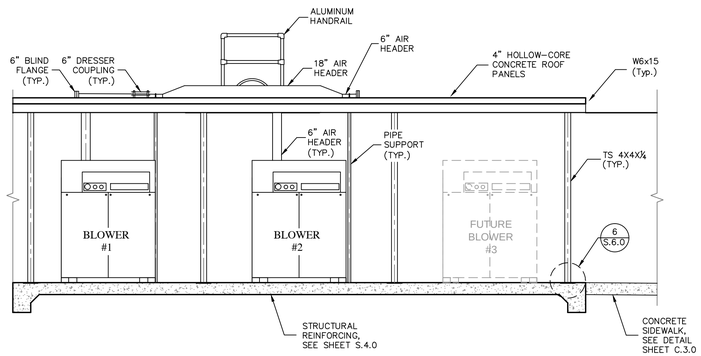

BLOWER SHELTER ELEVATION

SCALE: 1/4"=1'-0"

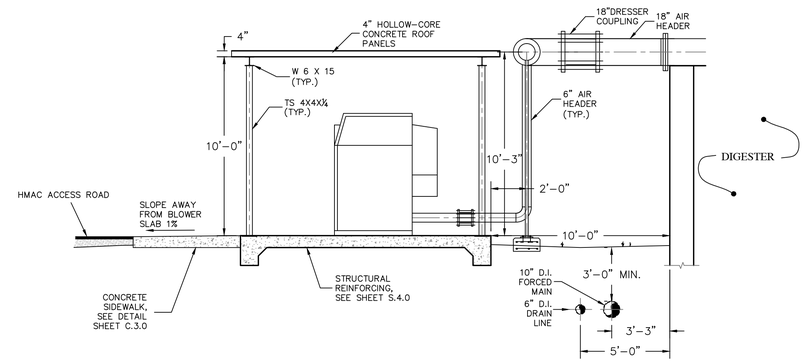

EAST ELEVATION

SCALE: 1/4"=1'-0"

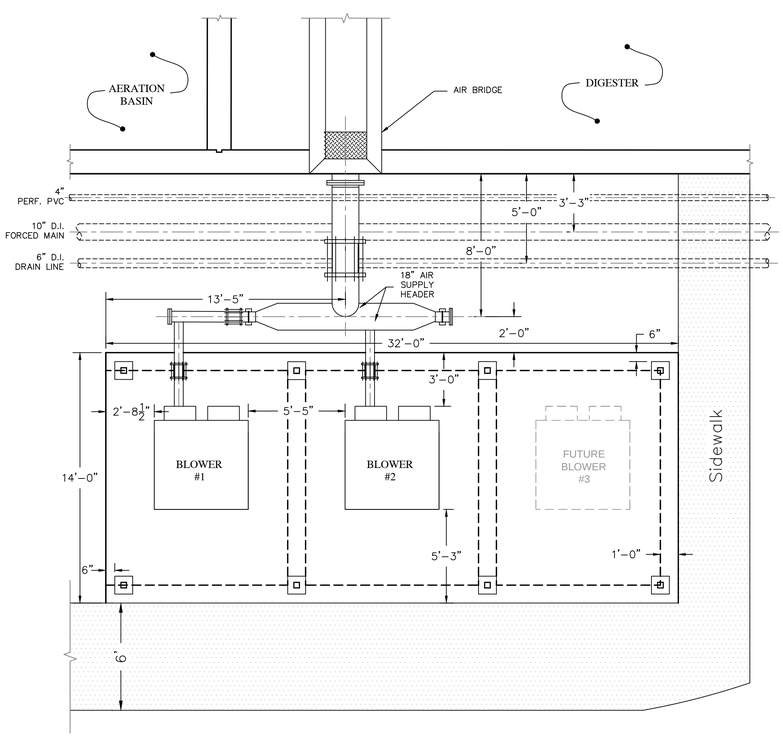

BLOWER SHELTER PLAN

SCALE: 1/4"=1'-0"

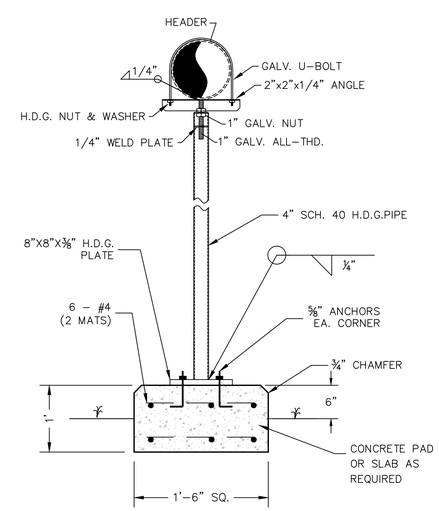

PIPE SUPPORT DETAIL

N.T.S.

FOR REVIEW ONLY

THIS DOCUMENT IS RELEASED FOR THE PURPOSE OF REVIEW ONLY, BY:

NAME: Frank T. Phelan

P.E. No.: 93874

NOT INTENDED FOR BIDDING OR CONSTRUCTION PURPOSES.

Jay Engineering Company, Inc.
P.O. Box 270
Leander, Texas 78646-1220
Tel: (512) 259-3882 Fax: (512) 259-8016
Texas Registered Engineering Firm F-4780

WRP, OFFSITE LIFT STA. & RECLAIMED WATER PUMP STA.
CRYSTAL FALLS WEST - SEC. 1

BLOWER SHELTER PLANS & ELEVATIONS

THE LOOKOUT GROUP

SCALE: AS NOTED DWN: JJD DESIGN: FAJ DATE: OCT 2012

DWG. NO. AS NOTED JOB NO. 157-046-20

no.	date	Revisions	appv.

Sheet

C.18.0

C:\Projects-Lookout-Group\Crystal-Falls-West_Sec1_WRP_LiftSta_PmpSta_044-045-046\Const-Plans_WRP\1st-Set\CFW-Sec1_WRP_Sn-C.18.0_Blower-Shelter-Plan-Elevs.dwg

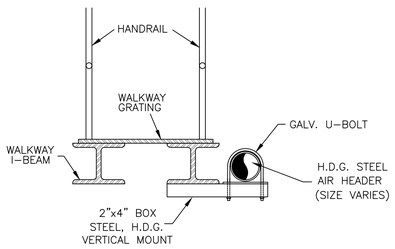

PIPE SUPPORT DETAIL

NTS

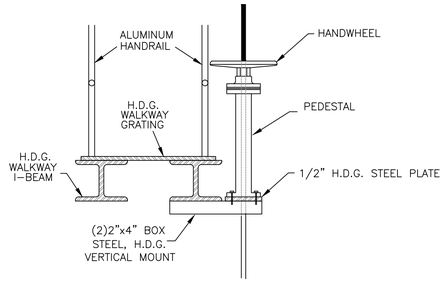

VALVE OPERATOR MOUNTING DETAIL

NTS

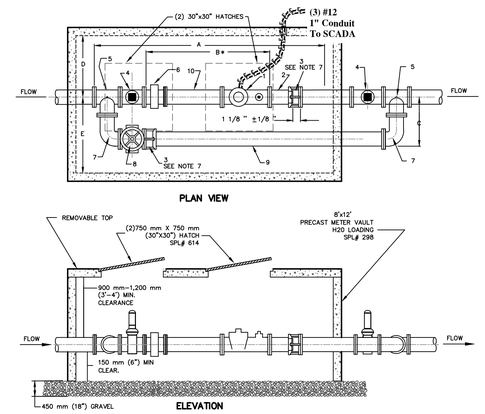

Dimension	DESCRIPTION	LENGTH
A	OVERALL LENGTH	125.5"
B*	8"-METER + 8" STRAINER +SPOOL 3"-METER + 8"x3" REDUCERS + SPOOL(Temporary)	80"
C	CENTER OF MAINLINE TO OUTSIDE OF BYPASS	36"
D	CENTERLINE OF MAINLINE TO INSIDE OF VAULT	36"
E	CENTERLINE OF MAINLINE TO INSIDE OF VAULT	60"

NO.	NAME	NOMINAL LENGTH
1	8" TURBINE METER W/ELECTRONIC PICKUP	20"
2	8" FLANGED x PLAIN END	11"
3	8" FLANGED COUPLING ADAPTER	5"
4	8" GATE VALVE SQUARE NUT	11.5"
5	8"x8"x8" FLANGED TEE	18"
6	8" STRAINER	20"
7	8" FLANGED ELBOW 90°	
8	8" BYPASS GATE VALVE WITH HANDWHEEL	11.5"
9	8" BYPASS DUCTILE IRON PIPE	
10	8" FLANGED SPOOL	40"

*DIMENSIONS- SUBJECT TO CHANGE, CHECK WITH INSPECTOR

NOTES:

1. PIPE AND METER SIZE SHALL BE AS DETERMINED BY OWNER; APPROVAL BY WATERSHED PROTECTION AND DEVELOPMENT REIVEW AND FIRE DEPARTMENTS. PLANS MUST BE PREPARED BY LICENSED ENGINEER IF INSTALLATION IN RIGHT-OF-WAY IS BY OTHER THAN CITY FORCES.
2. METER VAULT MUST BE BEHIND CURB AND/OR WALK AND OUT OF VEHICULAR TRAFFIC.
3. MAIN LINE AND BYPASS VALVES WILL BE RESILIENT SEAT TYPE WITH CORROSION RESISTANT FUSION BANDED EPOXY COATING INSIDE AND OUTSIDE. NON-RISING STEM. MAIN LINE VALVES SHALL HAVE SQUARE OPERATING NUTS. BYPASS VALVE WILL HAVE A HANDWHEEL. PROPERTY OWNER'S VALVE MUST BE LOCATED OUTSIDE OF THE CITY OF AUSTIN METER VAULT.
4. APPROVAL WILL BE NEEDED IF HEIGHT OF VAULT EXCEEDS 1.8 m (72"), CALL THE PIPELINE ENGINEERING DIVISION. METER MUST BE MODIFIED TO READ FROM TOP OF VAULT.
5. HATCH OPENING WILL BE 750 mm X 750 mm (30"X30"). SEE SPL #614.
6. IRON PIPE TAPPING SLEEVE IN STREET RIGHT-OF-WAY SHALL BE IMBEDDED IN GRANULAR MATERIALS AS REQUIRED BY CITY OF AUSTIN STANDARD SPECIFICATIONS 510.3 (14); BACKFILL ABOVE GRANULAR BEDDING AS REQUIRED BY 510.3 (25).
7. DOUBLE HARNESS MJ WITH TIE RODS. ALL OTHER FITTINGS INSIDE VAULT WILL BE FLANGED.
8. CONTACT THE PLUMBING REVIEW OFFICE OF THE WATERSHED PROTECTION AND DEVELOPMENT REVIEW DEPARTMENT AT 974-2680 PRIOR TO INSTALLATION OF COMPOUND METERS FOR PROPER DOMESTIC DEMANDS.
9. NOTCHES WHERE PIPING GOES THROUGH VAULT SHALL BE FILLED WITH MORTAR.
10. THE TOP OF THE METER VAULT SHALL BE AT AN ELEVATION SUCH THAT THE SURROUNDING GROUND SLOPES AWAY FROM THE VAULT.

METER VAULT INSTALLATION

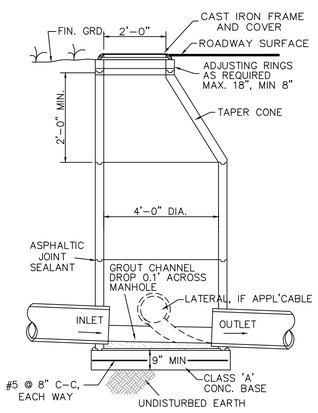

MANHOLE DETAIL

NTS

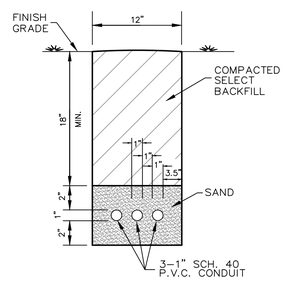

CONDUIT TRENCH DETAIL

not to scale

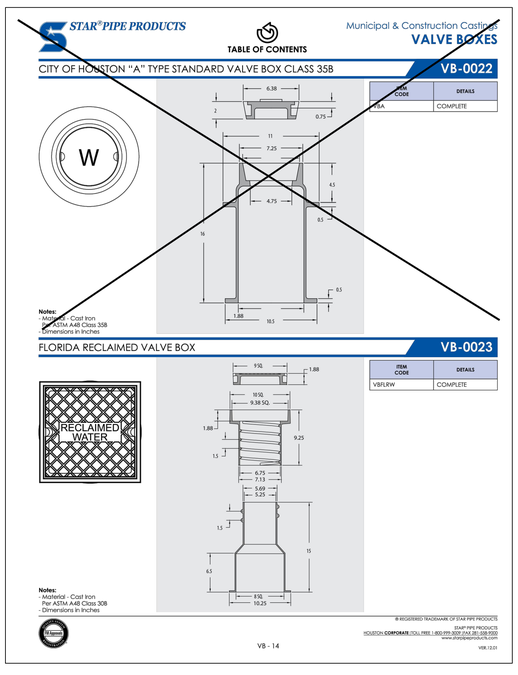

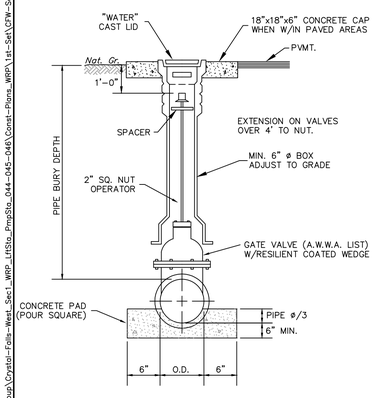

STANDARD GATE VALVE

NTS

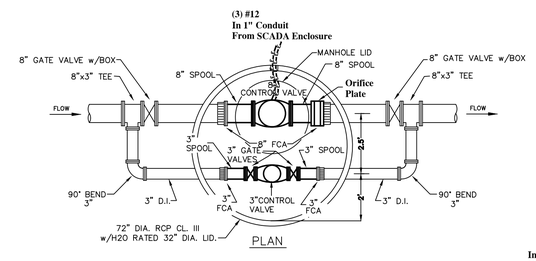

Install
(1) 8" Rate of Flow/Solenoid Hydraulic Control Valve w/Check Feature. Orifice Plate Bore Sized For Min. Flow = 300 gpm
(1) 3" Pressure Reducing Hydraulic Control Valve w/Check Feature
(2) 3" Gate Valves w/Hand Wheels
3" and 8" Flanged Spools

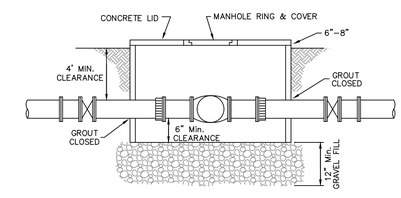

NOTES:

1. GATE VALVES INSIDE VAULT SHALL BE WHEEL OPERATED.
2. VALVES SHALL BE SUPPORTED WITH CONCRETE BLOCKS.

HYDRAULIC CONTROL VALVE, VAULT, & BYPASS

not to scale

FOR REVIEW ONLY

THIS DOCUMENT IS RELEASED FOR THE PURPOSE OF REVIEW ONLY, BY:

NAME: Frank T. Phelan

P.E. No.: 93874

NOT INTENDED FOR BIDDING OR CONSTRUCTION PURPOSES.

Jay Engineering Company, Inc.
P.O. Box 1220
Leander, Texas 78646-1220
Tel. (512) 259-3882 Fax. (512) 259-9016
Texas Registered Engineering Firm F-4780

CRYSTAL FALLS WEST SEC. 1
WRP, OFFSITE LIFT STA. & RECLAIMED WATER PUMP STA.

MISC. CONSTRUCTION DETAILS

THE LOOKOUT GROUP

SCALE: AS NOTED | DWN: JJD | DESIGN: FAJ | DATE: DEC 2012

DWG. NO. AS NOTED | JOB NO. 157-045-20

no.	date	Revisions	appv.

Sheet **C.19.0**

C:\Projects-Lookout-Group\Crystal-Falls-West_Sec1_WRP_LiftSta_PmpSta_044-045-046\Const-Plans_WRP\1st-Set\CFW-Sec1_WRP_Sh-C.19.0_Misc-Const-Details1.dwg

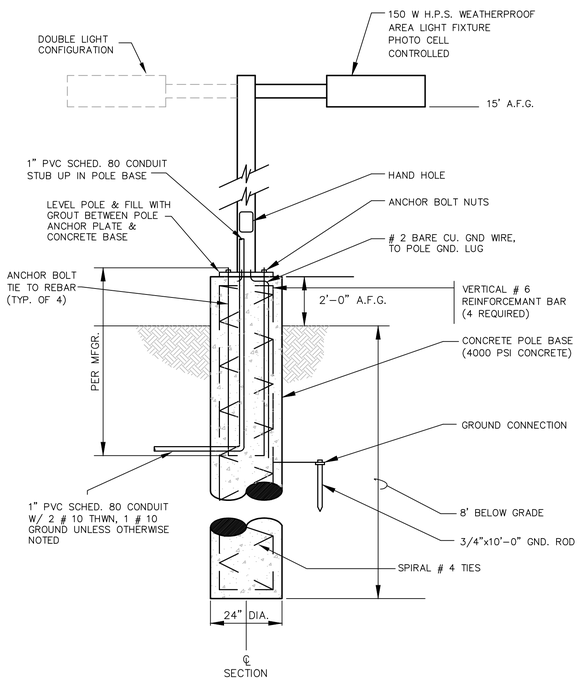

AREA LIGHTING POLE

N.T.S.

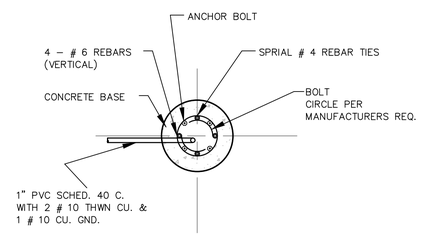

PLAN

N.T.S.

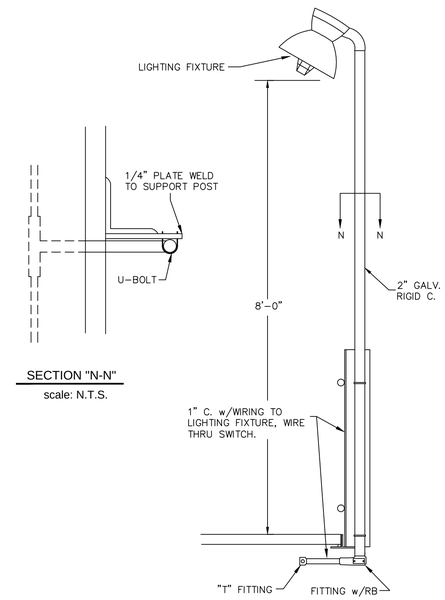

SECTION "N-N"

scale: N.T.S.

TYPICAL STANCHION LIGHT

scale: N.T.S.

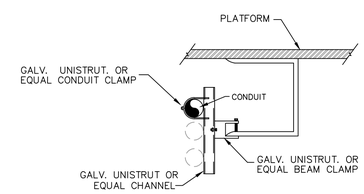

CLARIFIER WALKWAY CONDUIT SUPPORT

scale: N.T.S.

FOR REVIEW ONLY

THIS DOCUMENT IS RELEASED FOR THE PURPOSE OF REVIEW ONLY. BY:

NAME: Frank T. Phelan

P.E. No.: 93874

NOT INTENDED FOR BIDDING OR CONSTRUCTION PURPOSES.

Jay Engineering Company, Inc.
P.O. Box 1220
Leander, Texas 78646-1220
Tel: (512) 259-3882 Fax: (512) 259-8016
Texas Registered Engineering Firm F-4780

CRYSTAL FALLS WEST - SEC. 1
WRP, OFFSITE LIFT STA. & RECLAIMED WATER PUMP STA.

MISC. CONSTRUCTION DETAILS

THE LOOKOUT GROUP

SCALE: AS NOTED DWN: JJD DESIGN: FAJ DATE: DEC 2012
DWG. NO. AS NOTED JOB NO. 157-045-20

No.	date	Revisions	appr.

Sheet

C.20.0

C:\Projects-Lookout-Group\Crystal-Falls-West_Sec1_WRP_LftSta_PmpSta_044-045-046\Const-Plans_WRP\1st-Set\CFW-Sec1_WRP_Sh-C.20.0_Misc-Const-Details2.dwg

STRUCTURAL NOTES

GENERAL:

GN-1 THE STRUCTURE HAS BEEN DESIGNED TO RESIST DESIGN LOADS ONLY AS A COMPLETED STRUCTURE. APPLICATION OF CONSTRUCTION LOADS TO THE PARTIALLY COMPLETED STRUCTURE SHALL BE CONSIDERED BY THE CONTRACTOR AND SO INCLUDED IN THE DESIGN OF SHORING, BRACING, FORMWORK, AND ANY OTHER SUPPORTING ELEMENTS PROVIDED FOR CONSTRUCTION OF THE STRUCTURE. WHEN SPECIFIED IN THE CONTRACT DOCUMENTS, OR REQUIRED BY THE STRUCTURAL ENGINEER, CONTRACTOR SHALL PRODUCE CALCULATIONS PREPARED BY A REGISTERED ENGINEER IN THE STATE OF TEXAS WHICH VERIFY THE MEANS OF STRUCTURALLY MAINTAINING THE INTEGRITY OF THE STRUCTURE DURING CONSTRUCTION.

GN-2 DURING ERECTION AND UNTIL ALL PERMANENT CONNECTIONS ARE MADE, THE CONTRACTOR SHALL PROVIDE TEMPORARY BRACING TO BRACE THE STRUCTURE IN ALL DIRECTIONS. (REF. GN-1).

GN-3 GENERAL CONTRACTOR SHALL CHECK AND VERIFY ALL DIMENSIONS, GRADE CONDITIONS, (BOTH NEW AND EXISTING), EXISTING STRUCTURAL DETAILS (IF ANY), REPORTING ANY DISCREPANCIES TO THE STRUCTURAL ENGINEER BEFORE PROCEEDING WITH ANY PHASE OF THE WORK AS THE GENERAL CONTRACTOR SHALL BE RESPONSIBLE FOR ALL WORK FITTING AS INTENDED BY THE CONTRACT DOCUMENTS.

GN-4 DETAILS IN THE CONTRACT DOCUMENTS INDICATED AS "TYPICAL" SHALL APPLY IN ALL AREAS WHERE CONDITIONS SIMILAR TO THE DETAIL OCCUR.

GN-5 STRUCTURAL DESIGN CRITERIA:

I. LIVE LOADS:

A. MINIMUM LIVE LOADS – LBS. PER SQUARE FOOT

OFFICES –	50
STORAGE BUILDING –	250
WALKWAYS, GRATING & SUPPORTS –	150
ROOFS W/PITCH LESS THAN 3:12 –	20

B. WIND LOADS – 2009 INTERNATIONAL BUILDING CODE

BASIC WIND SPEED (MPH)	90
EXPOSURE CLASSIFICATION	B

D. SEISMIC LOADS –

IMPORTANCE FACTOR –	Ie=1.25
SITE CLASS–	D
SPECTRAL RESPONSE ACCELERATION–	Ss -8.35 %g Sl -3.89 %g
SEISMIC DESIGN CATEGORY –	A

II. FUTURE LOADS: UNLESS SPECIFICALLY NOTED, THERE ARE NO PROVISIONS MADE FOR FUTURE FLOORS, ROOFS, OR OTHER LOADS.

III. APPLICABLE CODES:

A. A.C.I. 350-01
B. A.I.S.C. ASD MANUAL-NINTH EDITION 1989
C. A.W.S. D1.1-94 – STRUCTURAL WELDING CODE – STEEL
D. A.W.S. D1.4-92 – STRUCTURAL WELDING CODE – REINFORCING STEEL
E. A.I.S.I. SPECIFICATION FOR THE DESIGN OF COLD-FORMED STEEL STRUCTURAL MEMBERS, 1986 (REVISED 1989)
F. MBNA-LOW RISE BUILDING SYSTEMS MANUAL, 1986 (REVISED 1990)
G. PCI MNL-120-92- DESIGN HANDBOOK PRECAST/PRESTREED CONCRETE
H. STEEL DECK INSTITUTE-DIAPHRAGM DESIGN MANUAL , SECOND EDITION
I. 2009 INTERNATIONAL BUILDING CODE

IV. THE FOUNDATION SYSTEM DESIGN IS BASED ON THE RECOMMENDATIONS OF THE GEOTECHNICAL REPORT NO. 1210400.188, DATED JULY 19, 2012, PREPARED BY MLA LABS, INC.

GN-6 THE STRUCTURAL CONTRACT DOCUMENTS ARE NOT INTENDED FOR USE AS SHOP/ERECTION DRAWINGS.

GN-7 SUBMITTAL OF CALCULATIONS FOR PRE-ENGINEERED STRUCTURAL ELEMENTS IS FOR RECORD PURPOSES ONLY. DESIGN, AND FABRICATION OF THESE ELEMENTS IS THE RESPONSIBILITY OF THE SUPPLIER/MANUFACTURER, WHO IS TO ENGAGE A QUALIFIED PROFESSIONAL ENGINEER TO PREPARE DESIGN CALCULATIONS AND OTHER STRUCTURAL DATA. EXAMPLES OF PRE-ENGINEERED ELEMENTS INCLUDE, WALKWAYS, GRATINGS, HANDRAILS, STAIRS, PRECAST HOLLOW CORE SLABS AND PRE ENGINEERED BUILDINGS.

GN-8 REFERENCE MECHANICAL, ELECTRICAL AND PLUMBING CONTRACT DOCUMENTS FOR LOCATION AND SIZE OF ANY ITEMS WHICH MAY REQUIRE SLAB OPENINGS, SLEEVES, INSERTS, ANCHORS AND BOLTS REQUIRED BY VARIOUS TRADES.

GN-9 REFER TO ARCHITECTURAL CONTRACT DOCUMENTS FOR FLOOR FINISHES, DIMENSIONS AND LOCATIONS OF SLAB DROPS, DEPRESSIONS, CURBS, HANDRAIL DETAILS, ETC.

GN-10 PROVIDE ADEQUATE STRUCTURAL FRAMING AS APPROVED BY THE STRUCTURAL ENGINEER FOR ALL REQUIRED MECHANICAL OPENINGS THROUGH SLABS, WALLS, FLOOR OR ROOF DECK, ETC., AND SUPPORT OF ALL MECHANICAL EQUIPMENT. OPENINGS SHALL NOT BE PERMITTED THROUGH BEAMS UNLESS SPECIFICALLY DETAILED BY THE STRUCTURAL ENGINEER.

GN-11 CONSTRUCTION MATERIALS SHALL NOT BE STORED ON FLOORS OR ROOFS IN EXCESS OF THE DESIGN LIVE LOADS REFERENCED IN NOTE GN-5, I-A. IT IS THE CONTRACTOR'S RESPONSIBILITY TO ENFORCE THIS REQUIREMENT. IMPACT LOADS SHALL BE PREVENTED WHEN PLACING MATERIALS ON FLOORS OR ROOFS.

QUALITY CONTROL:

QC-1 QUALITY CONTROL SERVICES INCLUDE INSPECTIONS, TESTS AND RELATED ACTIONS, INCLUDING REPORTS PERFORMED BY EITHER THE CONTRACTOR, BY INDEPENDENT TESTING AGENCIES OR GOVERNING AUTHORITIES. THEY DO NOT INCLUDE CONTRACT ENFORCEMENT ACTIVITIES PERFORMED BY THE STRUCTURAL ENGINEER.

QC-2 INSPECTION AND TESTING SERVICES ARE REQUIRED TO VERIFY COMPLIANCE WITH REQUIREMENTS SPECIFIED OR INDICATED. THESE SERVICES DO NOT RELIEVE THE CONTRACTOR OF RESPONSIBILITY FOR COMPLIANCE WITH CONTRACT DOCUMENTS REQUIREMENTS.

QC-3 CONTRACTOR IS RESPONSIBLE FOR RETESTING WHERE RESULTS OF INSPECTIONS, TESTS, OR OTHER QUALITY-CONTROL SERVICES PROVE UNSATISFACTORY AND INDICATE NONCOMPLIANCE WITH CONTRACT DOCUMENTS REQUIREMENTS, REGARDLESS OF WHETHER THE ORIGINAL TEST WAS CONTRACTOR'S RESPONSIBILITY.

QC-4 CONTRACTOR SHALL COORDINATE THE SEQUENCE OF ACTIVITIES TO ACCOMMODATE REQUIRED QUALITY-CONTROL SERVICES WITH A MINIMUM OF DELAY. CONTRACTOR IS RESPONSIBLE FOR SCHEDULING TIMES FOR INSPECTIONS, TESTS, TAKING SAMPLES, AND SIMILAR ACTIVITIES. CONTRACTOR IS TO PROVIDE THE STRUCTURAL ENGINEER, TESTING AGENCY AND ANY OTHER GOVERNING AUTHORITY A MINIMUM OF 24 HOURS NOTICE WHEN THEIR SERVICES ARE REQUIRED.

QC-5 THE INDEPENDENT AGENCY ENGAGED TO PERFORM INSPECTIONS, SAMPLING, AND TESTING OF MATERIALS AND CONSTRUCTION AS SPECIFIED HEREIN, SHALL NOTIFY THE OWNER, STRUCTURAL ENGINEER AND THE CONTRACTOR PROMPTLY OF IRREGULARITIES OR DEFICIENCIES OBSERVED IN THE WORK DURING PERFORMANCE OF ITS SERVICES. THE AGENCY IS NOT AUTHORIZED TO RELEASE, REVOKE, ALTER, OR ENLARGE REQUIREMENTS OF THE CONTRACT DOCUMENTS OR APPROVE OR ACCEPT ANY PORTION OF THE WORK.

CONCRETE/REINFORCING:

CR-1 USE OF DIFFERENT CLASSES OF CONCRETE SHALL BE AS SHOWN BELOW. CONCRETE BATCH DESIGN(S) SHALL BE PROPORTIONED AND PRODUCED IN ACCORDANCE WITH A.C.I. 350-01 AND A.C.I. 301-99 REFERENCE CONCRETE SPECIFICATIONS FOR SLUMP REQUIREMENTS, QUALITY CONTROL, TEST REQUIREMENTS, ETC.

F'c = 4000 PSI MINIMUM – ALL CONCRETE FOR GRADE SUPPORTED SLABS, SLABS OVER METAL DECK, RETAINING WALLS, FOOTINGS, AND ALL CONCRETE NOT SPECIFICALLY COVERED.

CR-2 CONTRACTOR SHALL PROVIDE NECESSARY CONSTRUCTION JOINTS IN MONOLITHIC CONCRETE FRAMING SO THAT NOT MORE THAN 400 CUBIC YARDS ARE POURED IN ONE DAY. REQUIRED CONSTRUCTION JOINT LAYOUT IS ADDRESSED IN THE FOUNDATION FRAMING PLANS.

CR-3 LOCATION OF CONSTRUCTION JOINTS SHALL HAVE PRIOR REVIEW BY THE STRUCTURAL ENGINEER AND SHALL BE GENERALLY LOCATED AT OR NEAR MIDPOINTS OF SPANS OF MEMBERS. ALL CONTINUOUS REINFORCING SHALL BE CARRIED THROUGH THE JOINT. REFERENCE DETAILS FOR CONTINUOUS KEY BETWEEN ADJACENT POURS AND ADDITIONAL REINFORCING AT THESE CONSTRUCTION JOINTS.

CR-4 REINFORCING BARS SHALL CONFORM TO THE FOLLOWING A.S.T.M. SPECIFICATIONS:

ALL BAR REINFORCING –	A-615, GRADE 60
WELDED WIRE FABRIC –	A-185

CR-5 ABSOLUTELY NO WELDING OF REINFORCING BARS OR TORCHING TO BEND REINFORCING BARS SHALL BE ALLOWED WITHOUT THE SPECIFIC APPROVAL OF THE STRUCTURAL ENGINEER.

CR-6 MINIMUM CONCRETE CLEAR COVER SHALL BE :

CONCRETE CAST AGAINST AND PERMANENTLY EXPOSED TO EARTH	3"
ALL OTHER CONCRETE	2"

CR-7 BAR SUPPORT ACCESSORIES SHALL BE PROVIDED IN ACCORDANCE WITH THE LATEST A.C.I. MANUAL OF STANDARD PRACTICE FOR DETAILING REINFORCED CONCRETE STRUCTURES, EXCEPT THAT BEAM REINFORCING SHALL BE SUPPORTED ON BEAM BOLSTERS SPACED NOT MORE THAN 4 FEET ON CENTER. WHEN THE CONCRETE SURFACE WILL BE EXPOSED TO VIEW AND/OR WEATHER, THE PORTIONS OF ALL BAR SUPPORTS WITHIN ½" OF THE CONCRETE SURFACE SHALL BE NONCORROSIVE OR PROTECTED AGAINST CORROSION. BAR SUPPORTS FOR CONCRETE WITH A SANDBLAST FINISH SHALL HAVE STAINLESS STEEL BAR SUPPORTS.

CR-8 FOR GRADE SUPPORTED SLABS, SLAB REINFORCING SHALL BE HELD IN PLACE BY BAR SUPPORTS AND ACCESSORIES SUPPLIED WITH SAND PLATES. PRECAST CONCRETE BAR SUPPORTS AS DESCRIBED IN CHAPTER 3 OF THE CRSI MANUAL OF STANDARD PRACTICE MAY ALSO BE USED. BAR SUPPORTS SHALL BE SPACED A MAXIMUM OF 4'-0" O.C. BOTH WAYS. NO ROCKS, CMU, CLAY TILE, OR BRICK SHALL BE USED TO SUPPORT REINFORCING. MINIMUM CLEAR CONCRETE COVER FOR GRADE SUPPORTED SLABS SHALL BE AS FOLLOWS:

SINGLE MAT REINFORCEMENT	2" FROM TOP
TWO MAT REINFORCEMENT	
TOP MAT	2" FROM TOP
BOTTOM MAT	3" FROM BOTTOM

CR-9 MECHANICAL AND ELECTRICAL CONDUITS OR PIPES IN SLABS SHALL RUN UNDER TOP LAYER OF SLAB REINFORCING. PROVIDE A MINIMUM OF 1-1/2" CLEAR BETWEEN CONDUITS AND BETWEEN REINFORCING AND ADJACENT CONDUITS PARALLEL TO REINFORCING. CONDUITS SHALL BE SPACED AT A DISTANCE OF 3 DIAMETERS OR WIDTHS ON CENTER. IF MAXIMUM SIZE OF CONDUIT EXCEEDS ONE THIRD OF THE SLAB DEPTH, NOTIFY THE STRUCTURAL ENGINEER, AS REVISIONS TO THE SLAB THICKNESS AND/OR REINFORCING REQUIREMENTS MAY BE NECESSARY.

CR-10 WHERE SHOWN IN THE DETAILS, H.C.A. STANDS FOR HEADED CONCRETE ANCHORS. ANCHORS SHALL CONFORM TO THE REQUIREMENTS OF A.S.T.M. A108, GRADES 1010, 1015, 1017, OR 1020. STUDS SHALL BE AUTOMATICALLY END WELDED IN THE SHOP OR FIELD IN ACCORDANCE WITH THE MANUFACTURER'S RECOMMENDATIONS.

CR-11 WHERE ADHESIVE ANCHORS (ADH. ANCH.) ARE SHOWN, THEY SHALL CONSIST OF STEEL ALL-THREAD ANCHOR ROD, NUT WASHER, AND ADHESIVE MATERIALS. ANCHORS SHALL BE MANUFACTURED FROM SAE GRADE 2, MEETING THE REQUIREMENTS OF A.S.T.M. A36 . ANCHOR RODS SHALL HAVE ROLLED THREADS AND SHALL BE FURNISHED WITH CHAMFERED ENDS OR WITH A 45 DEGREE CHISEL POINT ON ONE END TO ALLOW FOR EASY INSERTION INTO THE ADHESIVE-FILLED HOLE. THE ADHESIVE SHALL BE FORMULATED TO INCLUDE RESIN, HARDENER CEMENT AND WATER TO PROVIDE OPTIMAL CURING SPEED AS WELL AS HIGH STRENGTH AND STIFFNESS. ADHESIVE SHALL BE FURNISHED IN SIDE BY SIDE REFILL PACKS WHICH KEEP SEPARATE COMPONENT A AND COMPONENT B. ANCHORS SHALL BE INSTALLED USING MINIMUM DEPTHS, EDGE DISTANCES, SPACING (UNLESS NOTED OTHERWISE), AND INSTALLATION PROCEDURES AS RECOMMENDED BY THE MANUFACTURER. DO NOT APPLY LOAD TO ANCHOR UNTIL ADHESIVE HAS CURED IN ACCORDANCE WITH RECOMMENDATIONS OF THE MANUFACTURER. ACCEPTABLE ADHESIVE ANCHORS ARE HILTI HY 150 INJECTION ADHESIVE ANCHORS.

CR-12 WHERE NON-METALLIC, SHRINKAGE-RESISTANT GROUT IS SHOWN IN THE CONTRACT DOCUMENTS IT SHALL BE A PRE-MIXED, NON-METALLIC, NON-CORROSIVE, NON-STAINING PRODUCT CONTAINING SILICA SANDS, PORTLAND CEMENT, SHRINKAGE-COMPENSATING AGENTS, PLASTICIZING AND WATER-REDUCING AGENTS COMPLYING WITH A.S.T.M. C1107.

ACCEPTABLE PRODUCTS ARE: CRYSTEX; L&M CONSTRUCTION CHEM.
MASTERFLOW 713; MASTER BUILDERS
STAR GROUT; U.S. GROUT CORP.
UPCOM:UPCO CHEM. DIVISION, USM CORP.

CR-13 REINFORCING SUPPLIER SHALL PROVIDE COMPLETE PLACEMENT AND FABRICATING DRAWINGS FOR ALL REINFORCING INCLUDING THE LOCATION AND SIZE OF ALL ACCESSORIES AND SUPPORTS.

CR-14 CONCRETE. MIX DESIGN SHALL MEET THE FOLLOWING REQUIREMENTS:

-CEMENT TYPE:	ASTM C150, TYPE I OR III
-FLY ASH:	ASTM C618, TYPE C OR F (20% OF CEMENT CONTENT BY WT. MAX)-SINGLE SOURCE REQUIRED
-AGGREGATES:	ASTM C33
-AIR CONTENT:	ASTM C260, 2 TO 4%
-SLUMP LIMITS:	MAXIMUM 8"
-WATER/CEMENT RATIO:	0.45

ALL STRUCTURAL CONCRETE MIXES TO UTILIZE A HIGH-RANGE WATER-REDUCING ADMIXTURE.

GENERAL CONTRACTOR IS TO SUBMIT WRITTEN REPORT FOR THE PROPOSED MIX DESIGN AT LEAST 7 DAYS PRIOR TO START OF CONCRETE WORK.

CR-15 ALL ITEMS EMBEDDED IN CONCRETE SHALL BE TIED AND SECURED PRIOR TO PLACEMENT OF CONCRETE.

CR-16 MECHANICAL VIBRATOR (USED AT 18" INTERVALS MAXIMUM), HAND RODDING AND TAMPING SHALL BE USED TO CONSOLIDATE CONCRETE AND TO INSURE THAT CONCRETE IS WORKED AROUND REINFORCEMENT, OTHER EMBEDDED ITEMS AND INTO FORMS.

CR-17 DO NOT PLACE CONCRETE WHEN THE AMBIENT TEMPERATURE IS EXPECTED TO BE 95 DEGREES °F OR ABOVE AND/OR 40 DEGREES °F OR BELOW, FOR THE FIRST THREE HOURS AFTER PLACEMENT.

CR-18 ALL SLABS AND EXPOSED SURFACES FOR NON-FLUID CONTAINING STRUCTURES SHALL BE CURED USING A LIQUID-TYPE MEMBRANE CURING COMPOUND COMPLYING WITH ASTM C309, TYPE I, CLASS A. MOISTURE LOSS NOT MORE THAN 0.55 KG/M² IN 72 HOURS WHEN APPLIED AT 200 SQ. FT./GAL. AND TESTED IN ACCORDANCE WITH ASTM C156. CURING COMPOUND SHALL BE APPLIED IN ACCORDANCE WITH MANUFACTURER'S RECOMMENDATIONS. DO NOT USE MEMBRANE CURING COMPOUNDS ON SURFACES TO BE COVERED WITH FINISH MATERIALS/COATINGS APPLIED DIRECTLY TO CONCRETE. IF LIQUID TYPE CURING COMPOUND IS NOT USED PROVIDE OTHER MEANS OF CURING SUBJECT TO REVIEW BY THE STRUCTURAL ENGINEER. REF. PLAN NOTES FOR CURING REQUIREMENTS FOR FLUID CONTAINING STRUCTURES.

CR-19 MONOLITHIC SLAB SURFACES SHALL BE FINISHED AS INDICATED IN THE CONTRACT DOCUMENTS.

CR-20 GENERAL CONTRACTOR SHALL EMPLOY A TESTING LABORATORY TO PERFORM SAMPLING AND TESTING DURING CONCRETE PLACEMENT AS FOLLOWS:

-AGGREGATES	ASTM, C33, ONE TEST THE FIRST DAY
-COMPRESSIVE STRENGTH:	ASTM C39, ONE SET OF 5 CYLINDERS, FOR EACH DAY'S POUR OF 5 CU. YD. BUT LESS THAN 25 CU. YD. PLUS ONE SET FOR EACH ADDITIONAL 50 CU. YD. OR FRACTION THEREOF. TWO CYLINDERS TESTED AT 7 DAYS, TWO TESTED AT 28 DAYS, REMAINING ONE TO BE TESTED AT 56 DAYS IF NECESSARY.
-AIR CONTENT	ASTM C2312, PRESSURE METHOD. ONE TEST FOR EACH COMPOSITE SAMPLE.
-SLUMP	ASTM C143, ONE TEST AT POINT OF PLACEMENT FOR EACH COMPOSITE SAMPLE

CR-21 ALL FOOTINGS AND SLABS ON GRADE MUST HAVE THEIR PERIMETERS HARDFORMED. USE OF EXCAVATION EDGES AS FORMS IS NOT ACCEPTABLE.

CR-22 ALL WALL TIE HOLES & HONEYCOMB AREAS SHALL BE FILLED W/"EUCLID" VERTICOAT SUPREME REPAIR MORTAR. HONEYCOMB AREAS SHALL BE FILLED IN MAXIMUM TWO INCH LIFTS. PRIME AREAS TO BE FILLED OR REPAIRED W/A SLURRY COAT OF VERTICOAT SUPREME.

CR-23 FORM WALL TIES SHALL HAVE A BREAKOFF NO LESS THAN 1 ½" BELOW THE FACE OF THE WALL AND SHALL BE GALVANIZED OR STAINLESS STEEL. CONTRACTOR SHALL SUBMIT PROPOSED FORM TIES TO ENGINEER FOR APPROVAL. THROUGH WALL TAPER TIES ARE ACCEPTABLE BUT THEY MUST BE SEALED UTILIZING MECHANIC VERTICOAT SUPREME.

CR-24 ALL EXPOSED CONCRETE SURFACES SHALL BE FINISHED BY A TWO RUB PROCESS AS PER TEXAS DEPARTMENT OF TRANSPORTATION 2004 STANDARD SPECIFICATION FOR CONSTRUCTION OF HIGHWAYS. PRIOR TO PERFORMING THE RUB FINISH ALL WALL TIE HOLES SHALL BE FILLED WITH A NON-SHRINK, HIGH STRENGTH GROUT.

CONCRETE TOPPING:

CO-1 MINIMUM DEPTH OF TOPPING SHALL BE 3/4". EXISTING SLAB SHALL BE REMOVED TO THE LEVEL REQUIRED SO THAT THIS CRITERIA IS MET. CONTRACTOR SHALL SUBMIT TO STRUCTURAL ENGINEER THE PROPOSED PROCEDURE(S) FOR THE REMOVAL OF EXISTING SLABS PRIOR TO START OF WORK.

CO-2 PREPARE SURFACE TO ACCEPT TOPPING BY REMOVING ALL UNSOUND CONCRETE, LOOSE MATERIAL AND FOREIGN MATTER (REFER NOTE CO-1).

CO-3 SURFACES SHALL BE STRUCTURALLY SOUND, CLEAN AND FREE OF PAINT, GREASE, OIL, SOIL, CURING AND PAINTING COMPOUND AND OTHER FOREIGN MATTER. IF REQUIRED CLEAN SURFACES WITH A 10-15% MURIATIC ACID SOLUTION AND RINSE WITH CLEAR WATER TO ELIMINATE ALL TRACES OF THE ACID. A PROPERLY PREPARED SURFACE SHALL BE CLEAN AND SOUND, AND UNIFORMLY WETTABLE WITH WATER.

CO-4 APPLY BONDING AGENT TO THE MOISTENED SURFACE IN STRICT ACCORDANCE WITH THE MANUFACTURER'S RECOMMENDATIONS. WHILE THE BONDING AGENT IS STILL SOFT AND PLASTIC, APPLY CONVENTIONAL PORTLAND CEMENT TOPPING CONSISTING OF PORTLAND CEMENT, SAND AND GRAVEL. PLACE CONCRETE AT A SLUMP OF 4 INCHES AND FINISH AS SPECIFIED. DO NOT USE STEEL TROWELING FOR FINISHING THE SURFACE LATER THAN 2 HOURS AFTER PLACING OF THE CONCRETE TOPPING SINCE THIS MAY BREAK THE BOND BETWEEN THE BONDING AGENT AND THE EXISTING SURFACE BEFORE BOND STRENGTH HAS FULLY DEVELOPED.

CO-5 REINFORCING FOR TOPPING SLABS SHALL BE AS FOLLOWS:

3/4" TO 3-1/2"	W.W.F. 6X6 – W4.0XW4.0
3-1/2" TO 5"	#3 @ 12" O.C.
5" TO 10"	#4 @ 12" O.C.

GRADE-SUPPORTED SLABS/BEAMS:

GS-1 SITE PREPARATION FOR THE BUILDING PAD SHALL INCLUDE:

1. REMOVAL OF ANY ASPHALT, CONCRETE, VEGETATION, LOOSE TOPSOIL AND DEBRIS. ALL EXISTING BUILDINGS TO BE DEMOLISHED SHALL BE COMPLETELY REMOVED FROM THE SITE. EXISTING FOUNDATIONS TO BE REMOVED SHALL BE EXCAVATED TO A MINIMUM DEPTH OF 24 INCHES.

2. REMOVAL OF EIGHT FEET OF THE EXISTING SUBGRADE SOIL MATERIAL UNDER THE FOOTPRINT OF THE NEW STRUCTURE.

3. ONCE DEMOLITION, FOUNDATION EXCAVATION, SITE STRIPPING AND SUBGRADE REMOVAL HAS BEEN COMPLETED, THE EXPOSED SUBGRADE SHALL BE PROOF ROLLED WITH AT LEAST A 15-TON PNEUMATIC ROLLER TO DETECT WEAK AREAS. WEAK AREAS AND AREAS CONTAINING LOOSE FILL OR ORGANICS SHALL BE REMOVED AND REPLACED WITH SOILS FREE OF ANY ORGANICS AND EXHIBITING SIMILAR CLASSIFICATION, MOISTURE CONTENT AND DENSITY AS THE ADJACENT IN-SITU SOILS. FILL MATERIAL SHALL BE PLACED AND COMPACTED AS INDICATED BELOW. WHERE 15-TON ROLLER IS IMPRACTICAL DUE TO CONSTRUCTION RESTRICTIONS, PROVIDE ALTERNATE MEANS ACCEPTABLE TO STRUCTURAL ENGINEER.

4. EXPOSED SUBGRADE SHALL BE SCARIFIED TO A MINIMUM DEPTH OF SIX INCHES AND RECOMPACTED TO A MINIMUM OF 95% PERCENT OF A.S.T.M. D-698 MAXIMUM DRY DENSITY. MOISTURE CONTENT OF THE SUBGRADE SHALL BE MAINTAINED WITHIN -1 PERCENT AND +3 PERCENT OF THE OPTIMUM MOISTURE CONTENT UNTIL PERMANENTLY COVERED.

5. NON-EXPANSIVE FILL TO BE USED FOR GRADE ADJUSTMENT AND PREPARATION OF BUILDING PAD SHALL BE TYPE I FILL AS DESCRIBED BELOW:

TYPE I: MATERIAL MEETING THE REQUIREMENTS OF THE TEXAS DEPARTMENT OF TRANSPORTATION 1992 STANDARD SPECIFICATION FOR CONSTRUCTION OF HIGHWAYS, STREETS AND BRIDGES, ITEM 247, TYPE A, GRADE 2 OR 3 (CRUSHED STONE).

6. NON-EXPANSIVE FILL SHALL BE PLACED IN LIFTS NOT TO EXCEED EIGHT (8) INCHES LOOSE MEASURE AND COMPACTED TO A MINIMUM OF 95% OF THE MAXIMUM DRY DENSITY AS DETERMINED BY A.S.T.M. D-698, METHOD D. THE MOISTURE CONTENT OF THE FILL SHALL BE MAINTAINED WITHIN -2/+3 PERCENT OF THE OPTIMUM MOISTURE CONTENT UNTIL PERMANENTLY COVERED.

7. PERFORM FIELD-IN-PLACE DENSITY TESTS ACCORDING TO A.S.T.M. D1556, A.S.T.M. D2167, OR A.S.T.M. D2937 AS APPLICABLE. FIELD TESTING TO COMPLY WITH THE FOLLOWING:

-PAVED AND BUILDING SLAB AREAS: AT SUB-GRADE AND AT EACH COMPACTED FILL AND BACKFILL LAYER PERFORM AT LEAST ONE FIELD-IN-PLACE DENSITY TEST FOR EVERY 2000 SQ. FT. OR LESS OF PAVED/BUILDING SLAB AREA, BUT NO FEWER THAN THREE TESTS.

-FOUNDATION WALL BACKFILL: IN EACH COMPACTED BACKFILL LAYER, PERFORM AT LEAST ONE FIELD IN-PLACE DENSITY TEST FOR EACH 100 FT. OR LESS OF WALL LENGTH, BUT NO FEWER THAN TWO TESTS ALONG A WALL FACE.

WHEN TESTING AGENCY REPORT THAT SUB-GRADES, FILLS, OR BACKFILLS ARE BELOW SPECIFIED DENSITY, SCARIFY AND MOISTEN OR AERATE, OR REMOVE AND REPLACE SOIL TO DEPTH REQUIRED, RE-COMPACT AND RETEST UNTIL REQUIRED DENSITY IS OBTAINED.

GS-2 PROPER SITE DRAINAGE SHALL BE MAINTAINED DURING CONSTRUCTION TO INSURE SURFACE RUNOFF AWAY FROM THE STRUCTURES AND TO PREVENT PONDING OF SURFACE RUNOFF NEAR THE STRUCTURES.

GS-3 ALL GRADE SUPPORTED SLABS SHALL BE OF THE THICKNESS AND REINFORCED AS SHOWN IN THE STRUCTURAL DRAWINGS. WHEN REQUIRED, LAPS IN CONTINUOUS SLAB REINFORCING SHALL BE STAGGERED A MINIMUM OF 24 INCHES. LAPS SHALL BE CLASS B SPLICES AS PER CHAPTER 12 OF ACI 318.

GS-4 FOR ALL SLABS WITH AN ENCLOSED STRUCTURE ABOVE OR AS OTHERWISE INDICATED A TEN MIL. POLYETHYLENE VAPOR BARRIER SHALL BE PLACED DIRECTLY ABOVE THE COMPACTED FILL MATERIAL. LAP AND TAPE ALL JOINTS AND HOLES. VAPOR BARRIER SHALL EXTEND ALONG THE BEAMS' INTERIOR SIDES AND TERMINATE AT THE BEAMS' SOFFIT.A

GS-5 AFTER VAPOR BARRIER MATERIAL IS INSTALLED, PLACE REINFORCING STEEL IN GRADE SUPPORTED BEAMS AND SLAB AS INDICATED IN THE STRUCTURAL CONTRACT DOCUMENTS WHILE OBSERVING THE FOLLOWING REQUIREMENTS:

-LAPS IN CONTINUOUS SLAB REINFORCING SHALL BE STAGGERED AND SHALL CONFORM TO TABLE "A" ON SHEET S.2.0.

-LAPS IN CONTINUOUS BEAM REINFORCING WHEN NECESSARY SHALL OCCUR NEAR BEAM INTERSECTIONS FOR TOP REINFORCING AND MIDWAY BETWEEN BEAM INTERSECTIONS FOR BOTTOM REINFORCING, AND SHALL CONFORM TO TABLE "A".

STRUCTURAL STEEL:

SS-1 ALL STRUCTURAL STEEL FOR WIDE FLANGE SHAPES SHALL BE A.S.T.M. A992 GR. 50, STEEL FOR PLATES SHALL BE A.S.T.M. A36. STRUCTURAL STEEL FOR PIPE AND TUBE COLUMNS SHALL BE: A) ROUND STEEL PIPE COLUMNS: A.S.T.M. A53, TYPE E OR S, GRADE B, OR A.S.T.M. A501. B) SQUARE OR RECTANGULAR TUBE COLUMNS: A.S.T.M. A500, GRADE B. ALL STRUCTURAL STEEL SHALL BE FABRICATED AND ERECTED IN ACCORDANCE WITH THE LATEST A.I.S.C. SPECIFICATIONS.

SS-2 ALL WELDS SHALL BE MADE USING E 70XX ELECTRODES CONFORMING TO THE AMERICAN WELDING SOCIETY (AWS) "STRUCTURAL WELDING CODE" D1.1.

SS-3 FULL PENETRATION WELDED CONNECTIONS SHALL BE PROVIDED WHERE INDICATED BY THE MARK. A MINIMUM 10% OF ALL FIELD AND/OR SHOP FULL PENETRATION WELDS SHALL BE TESTED BY EITHER X-RAY OR ULTRASONIC PROCEDURES. REFERENCE SPECIFICATIONS FOR OTHER TESTING.

SS-4 BOLTED BEAM CONNECTIONS SHALL BE SIMPLE FRAMED SHEAR CONNECTIONS IN ACCORDANCE WITH THE SPECIFICATIONS FOR STRUCTURAL JOINTS USING A.S.T.M. A325 OR A490 BOLTS. UNLESS NOTED OTHERWISE IN THE STRUCTURAL CONTRACT DOCUMENTS, THE REACTIONS FOR BEAMS SHALL BE DESIGNED USING ½ OF THE TABULATED ALLOWABLE LOAD FOR THE GIVEN SPAN AS TABULATED IN PART 2 OF THE AISC MANUAL OF STEEL CONSTRUCTION. DIRECT TENSION INDICATOR (DTI), BOLTS SHALL BE PERMITTED. ALL BOLTED CONNECTIONS SHALL BE BEARING TYPE CONNECTIONS UNLESS NOTED AS SLIP CRITICAL. WASHERS SHALL BE INSTALLED UNDER NUTS OF FASTENERS WHEN REQUIRED BY THE SPECIFICATIONS FOR STRUCTURAL JOINTS.

SS-5 WHERE SHOWN IN THE STRUCTURAL CONTRACT DOCUMENTS, ANCHOR BOLTS SHALL CONSIST OF STEEL THREADED ROD, NUT AND WASHER. ANCHOR RODS SHALL BE MANUFACTURED FROM SAE GRADE 2, MEETING THE REQUIREMENTS OF A.S.T.M. A36 . ANCHOR RODS SHALL HAVE ROLLED THREADS.

SS-6 STEEL FABRICATOR SHALL VERIFY WITH STRUCTURAL ENGINEER ALL BEAM SPLICES OTHER THAN THOSE SHOWN ON THE PLANS. ANY FULL PENETRATION SHOP SPLICES APPROVED BY STRUCTURAL ENGINEER SHALL BE INSPECTED BY RADIOGRAPHIC METHODS BY A TESTING LABORATORY SELECTED BY THE STRUCTURAL ENGINEER AND PAID FOR BY THE FABRICATOR.

SS-7 WHERE SHOWN IN THE STRUCTURAL CONTRACT DOCUMENTS, TEFLON SLIDE BEARING PADS SHALL BE PROVIDED. BEARING PADS SHALL BE DURA-SLIDE AS MANUFACTURED BY TOBI ENGINEERING, INC. OR APPROVED EQUAL.

SS-8 ALL STRUCTURAL STEEL SHALL BE CLEANED AND GALVANIZED. APPLY ZINC COATING BY THE HOP-DIP PROCESS ACCORDING TO A.S.T.M. A123. FIELD WELDS, BOLTED CONNECTIONS AND ABRADED AREAS SHALL BE CLEANED AND "TOUCH UP" WITH GALVANIZING REPAIR PAINT IN ACCORDANCE WITH A.S.T.M. A780. THE GALVANIZING REPAIR PAINT SHALL HAVE A HIGH ZINC-DUST CONTENT WITH DRY FILM CONTAINING NO LESS THAN 95 PERCENT ZINC-DUST BY WEIGHT, AND COMPLYING WITH DOD-P-21035A OR SSPC-PAINT 20.

SS-9 PRIOR TO START OF FABRICATION, STEEL FABRICATOR SHALL PROVIDE COMPLETE ERECTION AND FABRICATION DRAWINGS SHOWING ALL MEMBERS AND CONNECTIONS.

METAL DECK:

MD-1 GALVANIZED STEEL ROOF DECK SHALL CONFORM TO THE LATEST EDITION OF A.S.T.M. A653, STRUCTURAL QUALITY (Fy=33 KSI). GALVANIZING SHALL CONFORM TO A.S.T.M. A924 WITH A MINIMUM COATING CLASS OF G-90 AS DEFINED IN A.S.T.M. A653 . OTHER PROPERTIES SHALL HAVE THE FOLLOWING MINIMUMS:

ROOF DECK: DEPTH	1-1/2"
GAGE:	24
I – SECTION MOMENT OF INERTIA:	0.093 IN.4/FT.
S – SECTION MODULUS	0.132 IN.3/FT.
VULCRAFT TYPE 1.5B DECK OR APPROVED EQUAL OR BETTER.	

DECKING SHALL BE CONTINUOUS OVER AT LEAST 3 SUPPORTS. EACH DECKING PANEL SHALL BE ATTACHED TO SUPPORTING MEMBERS AND ADJACENT PANELS WITH 5/8" DIA. PUDDLE WELDS AS INDICATED BELOW:

32 IN. PANEL	
NO. OF END AND SUPPORT WELDS	4
SPACING OF SIDELAP AND EDGE WELDS	12" O.C.

GALVANIZED STEEL ROOF DECK SHALL CONFORM TO LATEST EDITION OF A.S.T.M. A653, STRUCTURAL QUALITY (Fy=33 KSI) . GALVANIZING SHALL CONFORM TO A.S.T.M. A924 WITH A MINIMUM COATING CLASS OF G-90 AS DEFINED IN A.S.T.M. A653. OTHER PROPERTIES SHALL HAVE THE FOLLOWING MINIMUMS:

MD-2 DECK MANUFACTURER SHALL FURNISH RIDGE AND VALLEY PLATES AND FLAT PLATES AT CHANGE OF DECK DIRECTION TO PROVIDE A FINISHED SURFACE FOR THE APPLICATION OF ROOF INSULATION AND ROOF COVERING.

MD-3 PRIOR TO START OF FABRICATION, STEEL FABRICATOR SHALL PROVIDE COMPLETE ERECTION AND FABRICATION DRAWINGS SHOWING LAYOUT AND TYPES OF DECK PANELS, ANCHORAGE DETAILS, SUPPLEMENTARY FRAMING AND ALL ACCESSORIES.

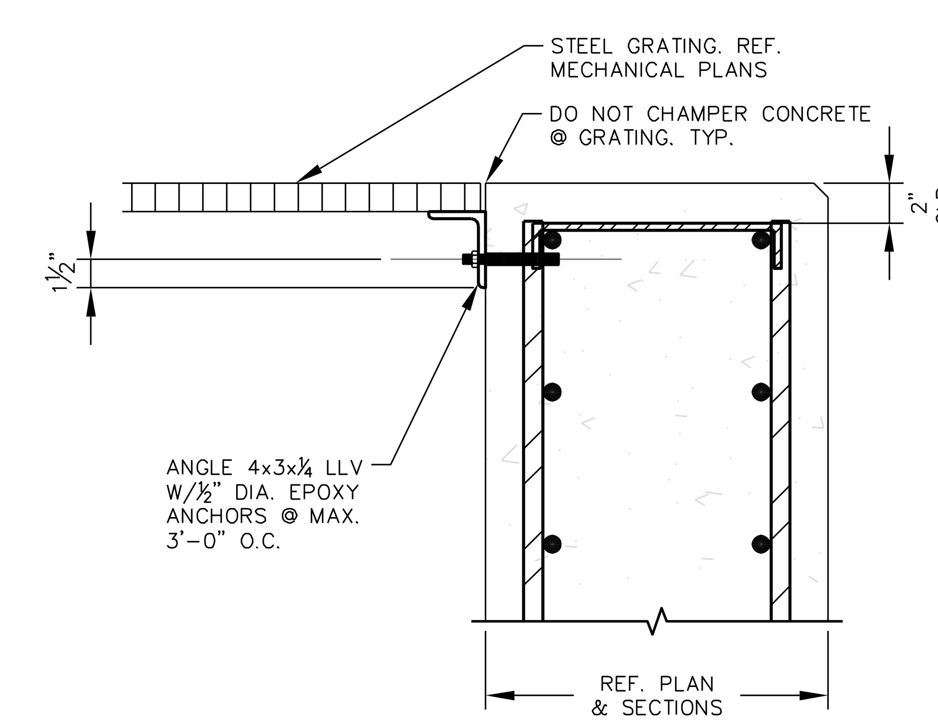

1 / S.1.0 TYP. GRATING SUPPORT DETAIL
SCALE : 1 1/2""=1'-0"

JACK HARRISON 85472 LICENSED PROFESSIONAL ENGINEER — STATE OF TEXAS — 12-31-12

Structural Design Consulting — 100 Park Road South, Wimberley, TX 78676, T.B.P.E. FIRM #4888, Office 830-935-2640

Jay Engineering Company, Inc.
P.O. Box 1220
Leander, Texas 78646-1220
Tel. (512) 259-3882 Fax. (512) 259-8016
Texas Registered Engineering Firm F-4780

WRP, OFFSITE LIFT STA. & RECLAIMED WATER PUMP STA.
CRYSTAL FALLS WEST - SEC. 1

STRUCTURAL NOTES & TYP. DETAILS

THE LOOKOUT GROUP

no.	date	Revisions	appv.

SCALE: AS NOTED DWN: JWH DESIGN: JWH DATE: DEC 2012
DWG. NO. AS NOTED JOB NO. 12782012

Sheet **S.1.0**

STRUCTURAL NOTES

MASONRY/GROUT:

MG-1 ALL REINFORCED MASONRY WALLS SHALL BE SUBJECTED TO QUALITY CONTROL INSPECTION AS OUTLINED IN IBC SECTION 1704.5.

MG-2 CONCRETE MASONRY UNITS (CMU), SHALL BE NORMAL WEIGHT (125 PCF MINIMUM), GRADE N, TYPE I, CONFORMING TO THE LATEST EDITION OF A.S.T.M. C90. THE AVERAGE COMPRESSIVE STRENGTH OF THREE INDIVIDUAL UNITS SHALL BE 1900 PSI. REFER TO ARCHITECTURAL DRAWINGS AND/OR SPECIFICATIONS FOR UNIT SIZE, FACE, COLOR, JOINTING, ETC.

MG-3 MORTAR SHALL BE TYPE "S", WITH A MINIMUM 28-DAY COMPRESSIVE STRENGTH OF 1800 PSI. MORTAR SHALL BE MIXED AS INDICATED IN IBC, CHAPTER 21, IN PARTICULAR TABLE NO. 2103.8(1).

MG-4 MINIMUM 28-DAY COMPRESSIVE STRENGTH (F'm) OF THE MASONRY WALLS SHALL BE 1500 PSI.

MG-5 PROVIDE VERTICAL REINFORCEMENT IN CMU WALLS AS SHOWN IN THE STRUCTURAL CONTRACT DOCUMENTS. FILL ALL REINFORCED CELLS WITH GROUT. GROUT SHALL BE FINE, WITH A MINIMUM 28-DAY COMPRESSIVE STRENGTH OF 3000 PSI AND SHALL CONFORM TO THE REQUIREMENTS OF IBC, CHAPTER 21, TABLE NO. 2103.12 AND A.S.T.M. C476. GROUT POURS SHALL NOT EXCEED 4 FEET IN HEIGHT UNLESS CLEANOUTS ARE PROVIDED IN THE BOTTOM COURSE OF THE CELL(S) TO BE GROUTED.

MG-6 HORIZONTAL JOINT REINFORCEMENT SHALL CONSIST OF #9 GA WIRE LADDER (TRUSS) TIES SPACED AT 16 INCHES O.C. VERTICALLY.

MG-7 PROVIDE #5 VERTICAL REINFORCING AT ALL CORNERS OF CMU WALLS. PROVIDE 2-#5 VERTICAL BARS (1 PER CMU CELL), AT ALL ENDS OF WALLS, EACH SIDE OF CONTROL JOINTS AND EACH SIDE OF WALL OPENINGS. REINFORCING SHALL BE PLACED IN THE LAST CELLS BEFORE THE DISCONTINUATION OR REDIRECTION OF MASONRY. REFERENCE ARCHITECTURAL CONTRACT DOCUMENTS FOR LOCATION OF CONTROL JOINTS.

MG-8 FOUNDATION DOWELS SHALL EXTEND A MINIMUM OF 30 BAR DIAMETERS INTO THE FOUNDATION AND 40 DIAMETERS INTO THE MASONRY WALL. LAP OR SPLICES OF REINFORCING STEEL IN MASONRY SHALL BE 2'-0" OR 40 BAR DIAMETERS, WHICHEVER IS GREATER. THERE SHALL BE A FOUNDATION DOWEL FOR EACH VERTICAL REINFORCING BAR, UNLESS NOTED OTHERWISE.

MG-9 PROVIDE 8" HIGH BOND BEAM (MINIMUM DEPTH UNLESS NOTED OTHERWISE) AT TOP OF ALL CMU WALLS AND AT MAXIMUM 8'-0" VERTICAL SPACING. REINFORCE BOND BEAM WITH 1-#5 AT BOTTOM OF BEAM. IF BOND BEAMS AT INTERSECTING WALLS MEET AT DIFFERENT ELEVATIONS, EXTEND BOTH BOND BEAMS AROUND INTERSECTING CORNER TO FIRST INTERIOR REINFORCED CELL, BUT NOT LESS THAN 4 FEET.

MG-10 BOND BEAM REINFORCING STEEL FOR INTERIOR AND EXTERIOR WALLS SHALL BE CONTINUOUS THROUGHOUT, EXCEPT AT CONTROL AND ISOLATION JOINTS.

-AT CONTROL JOINTS, INTERMEDIATE BOND BEAM REINFORCING SHALL BE DISCONTINUOUS. REINFORCEMENT IN BOND BEAMS AT FLOOR AND ROOF LEVELS SHALL BE CONTINUOUS.
-AT ISOLATION JOINTS ALL BOND BEAM REINFORCING SHALL BE CUT.

MG-11 BARS AROUND PERIMETER OF OPENINGS SHALL EXTEND NOT LESS THAN 40 BAR DIAMETERS OR 2'-0" WHICHEVER IS LARGER, BEYOND CORNER OF OPENING, EXCEPT AT CONTROL AND ISOLATION JOINTS.

MG-12 WHERE MASONRY ANCHORS (MAS. ANCH.) ARE SHOWN, THEY SHALL CONSIST OF A TWO-COMPONENT RESIN ADHESIVE CONTAINED IN TWO CARTRIDGES, USED IN CONJUNCTION WITH A GALVANIZED METAL SCREEN AND ALL-THREAD ROD. MASONRY ANCHORS SHALL BE INSTALLED AS RECOMMENDED BY THE ANCHOR MANUFACTURER. DO NOT APPLY LOAD TO ANCHOR UNTIL RESIN HAS CURED IN ACCORDANCE WITH RECOMMENDATIONS OF THE MANUFACTURER. ACCEPTABLE MASONRY ANCHORS ARE HILTI HIT C-20 ANCHORING SYSTEM OR APPROVED EQUAL.

PRECAST CONCRETE HOLLOWCORE SLABS

HCS-1 PRECAST ROOF DECK SHALL BE 8 INCH DEEP PRECAST PRE-STRESSED CONCRETE HOLLOW CORE PLANKS DESIGNED AND MANUFACTURED IN ACCORDANCE WITH THE SPECIFICATIONS AND REQUIREMENTS OF THE PRE-STRESSED CONCRETE INSTITUTE AND THE AMERICAN CONCRETE INSTITUTE.

HCS-2 PRECAST FABRICATOR SHALL DESIGN THE REINFORCEMENT IN EACH UNIT TO SUPPORT THE APPLIED SERVICE AND ERECTION LOADS.

HCS-3 CALCULATIONS MUST BE SUBMITTED WITH THE SHOP DRAWINGS. THE SHOP DRAWINGS AND CALCULATIONS SHALL BEAR THE SEAL OF A REGISTERED PROFESSIONAL ENGINEER LICENSED TO PRACTICE IN THE STATE OF TEXAS.

HCS-4 FABRICATOR SHALL LAYOUT UNITS (EXCEPT IN AREAS SPECIFICALLY SHOWN AND DIMENSIONED ON THE DRAWINGS) TO COVER ALL AREAS NOTED AS FRAMED WITH PRECAST UNITS. EXACT WIDTH OF LOAD BEARING SURFACES SHALL BE VERIFIED BY THE CONTRACTOR.

HCS-5 COORDINATE OPENINGS REQUIRED IN UNITS WITH ARCHITECTURAL, MECHANICAL AND ELECTRICAL DRAWINGS.

HCS-6 ALL UNITS SHALL BE DESIGNED BY THE FABRICATOR TO SATISFY THE FOLLOWING CRITERIA:

A. DESIGN FOR THE SUPERIMPOSED LIVE AND DEAD LOADS LISTED IN THE STRUCTURAL NOTES. REFER TO ARCHITECTURAL PLANS FOR LOCATION OF THE VARIOUS AREAS LISTED.

B. LIMIT NET DESIGN CAMBER DUE TO PRESTRESS TO 1" INCLUDING MAXIMUM ALLOWABLE TOLERANCE, CREEP, AND THE WEIGHT OF THE TOPPING.

C. LIVE LOADS SHALL NOT BE REDUCED.

D. THE MAXIMUM FLEXURAL STRESS RESULTING FROM SUPPORT OF TOTAL LOAD SHALL NOT EXCEED 6 TIMES THE SQUARE ROOT OF F'C.

E. LIMIT DIFFERENTIAL CAMBER BETWEEN ADJACENT UNITS OF DIFFERENT SPANS TO 3/4".

F. POWDER DRIVEN ANCHORS SHALL NOT BE USED ON HOLLOW CORE PLANKS. DRILLING AND CORING OF PLANKS IN THE FIELD FOR EXPANSION ANCHORS, CONDUITS, ETC., MAY BE DONE ONLY WITH PRIOR APPROVAL OF THE ENGINEER.

G. HOLLOW CORE PLANKS SHALL BEAR 3" (NOMINAL) ON BEARING SURFACES. PROVIDE HARD PLASTIC SHIMS AT ALL SUPPORTS.

H. DESIGN MODIFICATIONS MAY BE MADE ONLY AS NECESSARY TO MEET FIELD CONDITIONS AND TO ENSURE PROPER FITTING OF THE WORK AND ONLY AS ACCEPTABLE TO THE ENGINEER AND ARCHITECT. MAINTAIN GENERAL DESIGN CONCEPT SHOWN WITHOUT INCREASING OR DECREASING SIZES OF MEMBERS OR ALTERING PROFILES AND ALIGNMENT SHOWN. PROVIDE COMPLETE DESIGN CALCULATIONS AND DRAWINGS PREPARED BY A REGISTERED PROFESSIONAL ENGINEER, LICENSED TO PRACTICE IN THE STATE OF TEXAS, IF DESIGN MODIFICATIONS ARE ANTICIPATED.

ABBREVIATION

&	AND
@	AT
CL	CENTERLINE
X°	DEGREE
ø	DIAMETER
#	NUMBER/POUND
A.B.	ANCHOR BOLT
ADH. ANCH.	ADHESIVE ANCHORS
A.F.F.	ABOVE FINISHED FLOOR
ALT.	ALTERNATE
APPROX.	APPROXIMATE
ARCH.	ARCHITECT/ARCHITECTURAL
B/B	BACK TO BACK
B.P.	BASE PLATE
BT.	BENT
B.L.	BUILDING LINE
B.U.R.	BUILT-UP ROOF
BM.	BEAM
BLK.	BLOCK
B.W.	BOTH WAYS
BOTT.	BOTTOM
BLDG.	BUILDING
BSMT.	BASEMENT
BRG.	BEARING
BTWN.	BETWEEN
CANT.	CANTILEVER
C.I.P	CAST-IN-PLACE
C.J.	CONSTRUCTION JOINT
CLG.	CEILING
CLR.	CLEAR.
CMU	CONCRETE MASONRY UNITS
COL.	COLUMN
CONTR.	CONTRACTOR
CONC.	CONCRETE
CONN.	CONNECTION
CONST.	CONSTRUCTION
CONT.	CONTINUOUS
C.O.S.	CENTERLINE OF SPLICE
DEMO.	DEMOLITION
D.F.	DOUGLAS FIR
DIA.	DIAMETER
DIAG.	DIAGONAL
DIAPH.	DIAPHRAGM
DIM.	DIMENSION
D.J.	DUMMY JOINT
D.L.	DEAD LOAD
DN.	DOWN
DWL.	DOWEL
DWG.	DRAWING
EA.	EACH
E.F.	EACH FACE
E.E	EACH END
E.J.	EXPANSION JOINT
EL.	ELEVATION
ELEV.	ELEVATOR
EQ.	EQUAL
EMB.	EMBEDMENT/EMBEDDED
EQUIP.	EQUIPMENT
E.W.	EACH WAY
EXIST.	EXISTING
EXP.	EXPANSION
EXT.	EXTERIOR
EXTE	EXTERIOR END
EXP. ANCH.	EXPANSION ANCHORS
FDN.	FOUNDATION
F.D.	FLOOR DRAIN
F.S.	FAR SIDE
FIN.	FINISH
FLR.	FLOOR
F.O.C.	FACE OF CONCRETE
FT.	FOOT OR FEET
FTG.	FOOTING
FUT.	FUTURE
F.V.	FIELD VERIFY
GA.	GAGE
GALV.	GALVANIZED
GR.	GRADE
HK.	HOOK
HORIZ.	HORIZONTAL
HGT.	HEIGHT
H.S.	HIGH STRENGTH(BOLT)
H.C.A.	HEADED CONCRETE ANCHOR
I.D.	INSIDE DIAMETER
I.F.	INSIDE FACE
IN.	INCH
INV.	INVERTED
INT.	INTERIOR
INTE	INTERIOR END
JST.	JOIST
JT.	JOINT

K	KIP(THOUSAND POUNDS)
L	ANGLE
LBS.	POUND
LE	LEFT END
LF	LINEAR FOOT
LLH	LONG LEG HORIZONTAL
LGTH.	LENGTH
LG.	LONG
LVL.	LEVEL
LLV	LONG LEG VERTICAL
LLYP	LONG LEAF YELLOW PINE
MAX.	MAXIMUM
MECH.	MECHANICAL
MEZZ.	MEZZANINE
MFR.	MANUFACTURER
MID.	MIDDLE
MIN.	MINIMUM
MISC.	MISCELLANEOUS
M.O.	MASONRY OPENING
MAS.	MASONRY
NS	NEAR SIDE
N.I.C.	NOT IN CONTRACT
NOM.	NOMINAL
N.T.S.	NOT TO SCALE
O.C.	ON CENTER
O.D.	OUTSIDE DIAMETER
O.H.	OPPOSITE HAND
O/O	OUT TO OUT
O.F.	OUTSIDE FACE
OPNG.	OPENING
OPP.	OPPOSITE
P/C	PRECAST
PH.	PENTHOUSE
PLYWD.	PLYWOOD
PMU	PRECAST MASONRY UNITS
PREFAB.	PREFABRICATED
P.T.	PRESSURE TREATED
PSF	POUND PER SQUARE FOOT
PSI	POUND PER SQUARE INCH
PT.	POINT
PL	PLATE
R	RISER
RAD.	RADIUS
R.D.	ROOF DRAIN
REF.	REFERENCE
REINF.	REINFORCING/REINFORCED
REQD.	REQUIRED
R.E.	RIGHT END
R.O.	ROUGH OPENING
SPAC.	SPACES/SPACING
SCHED.	SCHEDULE
SECT.	SECTION
SHT.	SHEET/SHEATING
SIM.	SIMILAR
S.O.G	SLAB ON GRADE
SPEC.	SPECIFICATION
S.J.	SAWED JOINT
SL.	SLOPE
SLV	SLEEVE
STIFF.	STIFFENERS
STIRR.	STIRRUPS
SQ.	SQUARE
STD.	STANDARD
STL.	STEEL
STR.	STAIR
STRUCT.	STRUCTURE/STRUCTURAL
SUPT.	SUPPORT
SUSP.	SUSPENDED
SYM.	SYMMETRICAL
S.Y.P.	SOUTHERN YELLOW PINE
T	TREAD
T&B	TOP AND BOTTOM
T&G	TONGUE & GROOVE
THK.	THICK/THICKNESS
T.O.B.	TOP OF BEAM
T.O.C.	TOP OF CONCRETE
T.O.J.	TOP OF JOIST
T.O.S.	TOP OF STEEL
T.O.W.	TOP OF WALL
TOPP.	TOPPING
TYP.	TYPICAL
U.N.O.	UNLESS NOTED OTHERWISE
VERT.	VERTICAL
W/	WITH
WD.	WOOD
W.P.	WORK POINT
W/O	WITHOUT
WT.	WEIGHT
W.W.F.	WELDED WIRE FABRIC

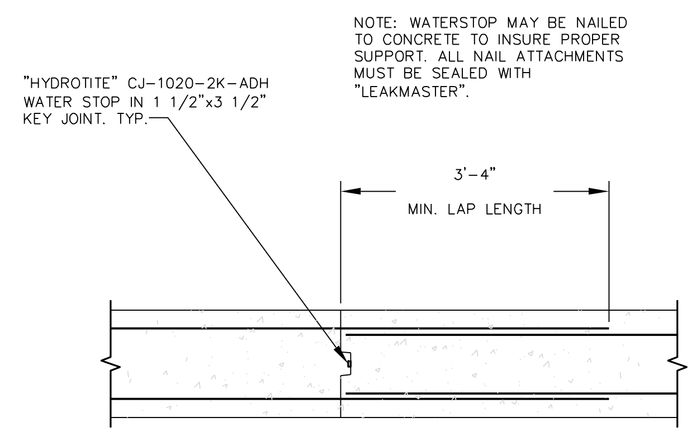

1 S.2.0 TYP. WALL CONST. JT. DETAIL
SCALE : 3/4"=1'-0"

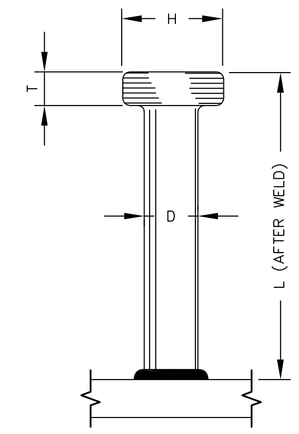

D	H	L BEFORE WELD	L AFTER WELD	T MIN.
1/4	1/2	2 11/16	2 9/16	3/16
3/8	3/4	4 1/8	4	9/32
1/2	1	5 5/16	5 3/16	9/32
5/8	1 1/4	6 9/16	6 3/8	9/32
3/4	1 1/4	7 3/16	7	3/8
7/8	1 3/8	8 3/16	8	3/8

STUDS SHALL BE AUTOMATICALLY END WELDED IN THE SHOP OR FIELD. STUDS ARE TO BE WELDED ON CENTERS AS SHOWN ON THE DWGS.

2 S.2.0 TYP. HEADED CONCRETE ANCHOR DETAIL
SCALE : 3/4"=1'-0"

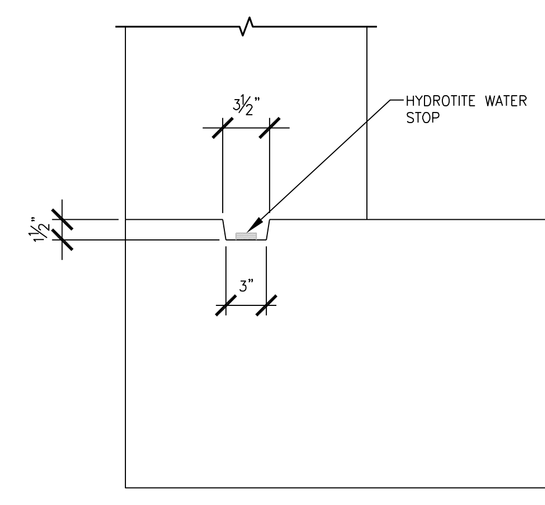

3 S.5.0 TYP. WALL BASE KEYWAY DETIAL
SCALE : 1 1/2""=1'-0"

REINFORCING LAP LENGTH SCHEDULE

BAR SIZE	f'c = 3.0 KSI, fy = 60.0 ksi: LAP LENGTH (IN.) TOP *	LAP LENGTH (IN.) OTHERS	EMBED LENGTH (IN.) TOP *	EMBED LENGTH (IN.) OTHERS	f'c = 4.0 KSI, fy = 60.0 ksi: LAP LENGTH (IN.) TOP *	LAP LENGTH (IN.) OTHERS	EMBED LENGTH (IN.) TOP *	EMBED LENGTH (IN.) OTHERS
3	19	16	14	12	17	16	13	12
4	25	19	19	15	23	17	17	13
5	31	24	24	18	28	22	22	17
6	43	33	33	26	40	30	30	24
7	59	45	45	35	54	41	41	32
8	77	60	60	46	71	54	54	42
9	98	75	75	58	89	69	69	53
10	124	96	96	74	114	87	87	67

4 S.2.0 TABLE "A" REINF. LAP SCHEDULE
SCALE : 3/4"=1'-0"

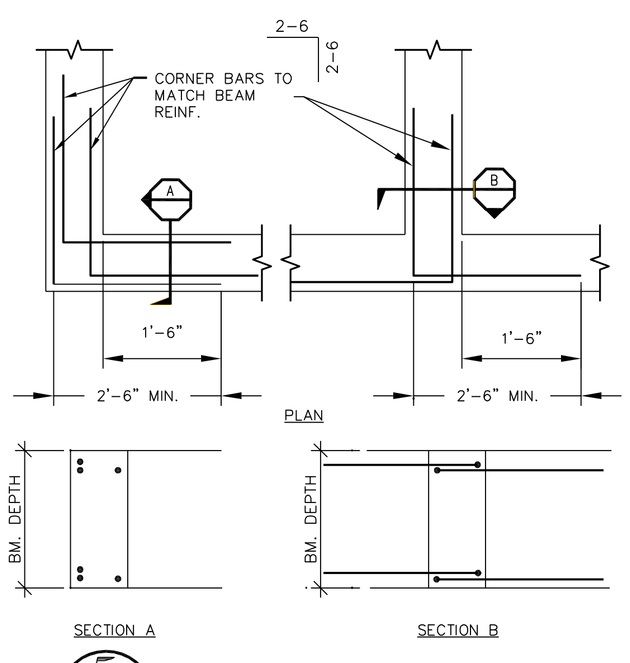

5 S.2.0 TYP. CORNER BAR DETAIL
SCALE : 3/4"=1'-0"

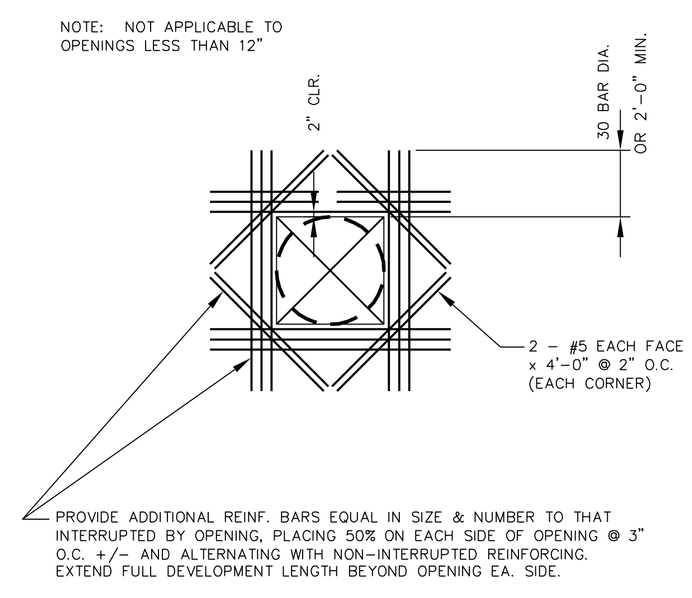

6 S.2.0 TYP. SLAB OPENING DETAIL
SCALE : 3/4"=1'-0"

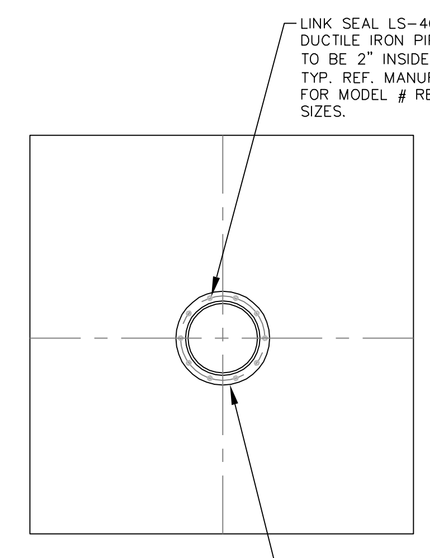

NOTES:

INSTALLATION PROCEDURE:

1. LOCATE CENTER LINE OF PIPE ON WALL AND CORE AS REQUIRED. REF. LINK SEAL MANUFACTURER'S INSTALLATION INSTRUCTIONS FOR PROPER CORE SIZE.

2. COAT INSIDE OF CORE WITH SIKADUR 32, HI-MOD LPL.

3. INSTALL PIPE AND LINK SEAL W/ THE FACE OF THE LINK SEAL 3" INSIDE THE FACE OF THE WALL.

4. AFTER LINK SEAL HAS BEEN INSTALLED PACK THE INSIDE & OUTSIDE OF THE CORE HOLE WITH SIKA GROUT 212.

7 S.2.0 CORED OPENING DETAIL
SCALE : 3/4"=1'-0"

STATE OF TEXAS
JACK HARRISON
85472
LICENSED
PROFESSIONAL ENGINEER
12-31-12

Structural Design Consulting
100 Park Road South
Kerrville, TX 78028
T.B.P.E. FIRM #4888
Office 830-935-2840

Jay Engineering Company, Inc.
P.O. Box 1220
Leander, Texas 78646-1220
Tel: (512) 259-3882 Fax: (512) 259-8016
Texas Registered Engineering Firm F-4780

WRP, OFFSITE LIFT STA. & RECLAIMED WATER PUMP STA.
CRYSTAL FALLS WEST - SEC. 1

STRUCTURAL NOTES, ABBREV. & TYP. DETAILS

THE LOOKOUT GROUP

SCALE: AS NOTED | DWN: JWH | DESIGN: JWH | DATE: DEC 2012
DWG. NO. AS NOTED | JOB NO. 12782012

no.	date	Revisions	appv.

Sheet
S.2.0

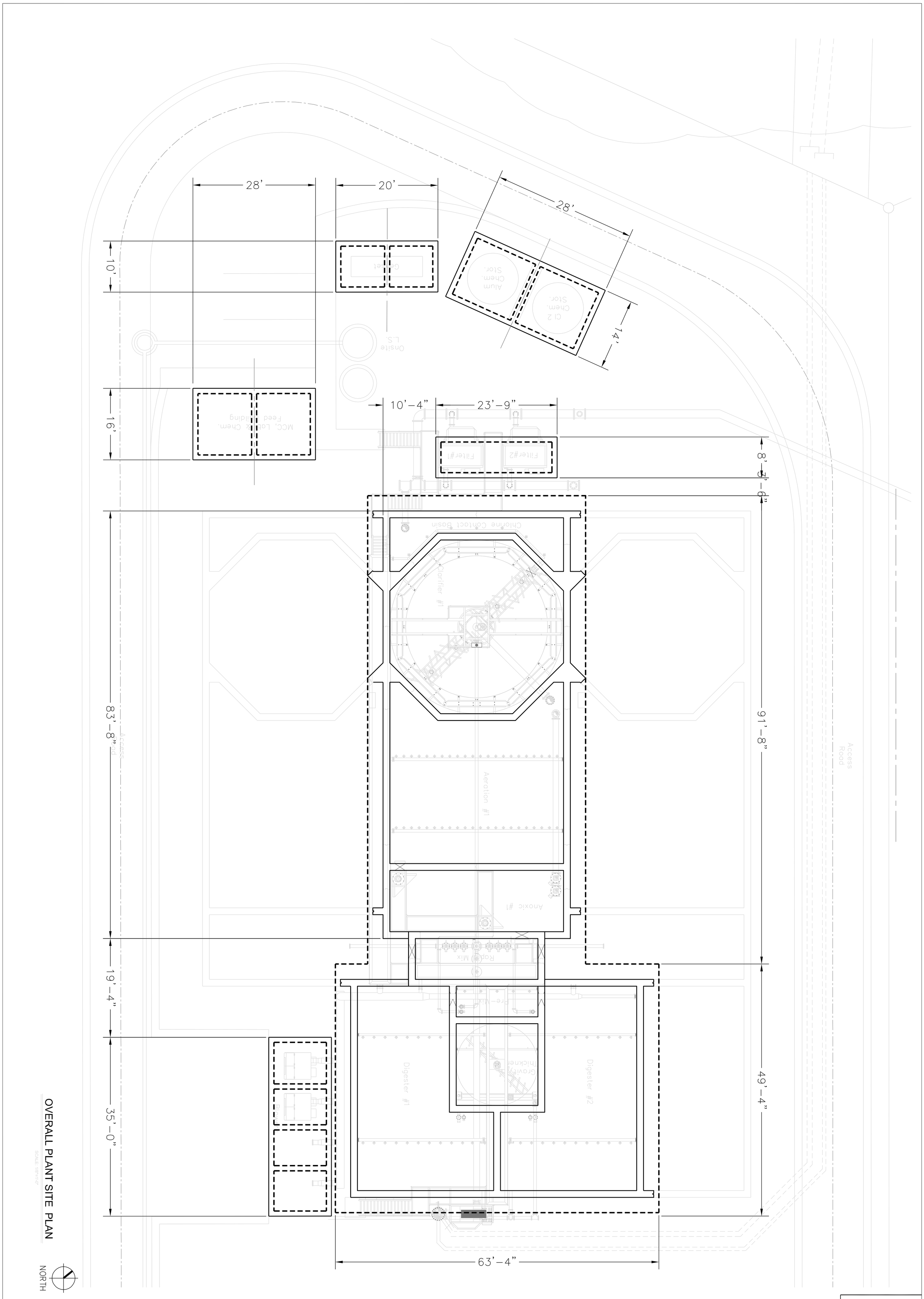

OVERALL PLANT SITE PLAN

SCALE: 1/8"=1'-0"

no.	date	Revisions	appv.

Sheet **S.3.0**

THE LOOKOUT GROUP

SCALE: AS NOTED DWN: JWH DESIGN: JWH DATE: DEC 2012

DWG. NO. AS NOTED JOB NO. 12782012

WRP, OFFSITE LIFT STA. & RECLAIMED WATER PUMP STA.
CRYSTAL FALLS WEST - SEC. 1

OVERALL PLANT SITE PLAN

Jay Engineering Company, Inc.
P.O. Box 1220
Leander, Texas 78646-1220
Tel. (512) 259-3882 Fax. (512) 259-8016

Texas Registered Engineering Firm F-4780

Structural Design Consulting
100 Park Road South
Wimberley, TX 78676
T.B.P.E. FIRM #4888
Office 830-935-2640

STATE OF TEXAS
JACK HARRISON
85472
LICENSED PROFESSIONAL ENGINEER
12-31-12

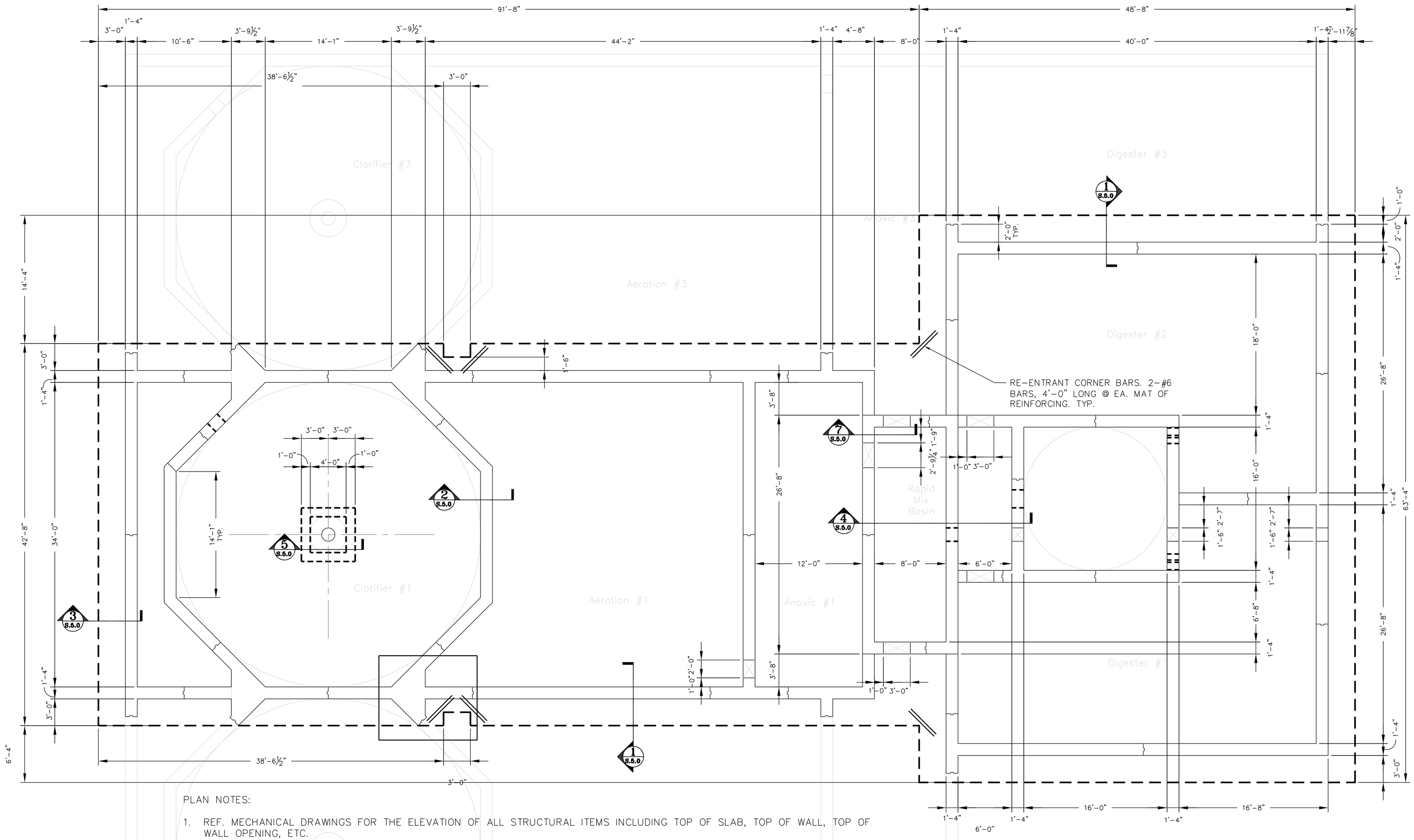

PLAN NOTES:

1. REF. MECHANICAL DRAWINGS FOR THE ELEVATION OF ALL STRUCTURAL ITEMS INCLUDING TOP OF SLAB, TOP OF WALL, TOP OF WALL OPENING, ETC.
2. RECOMMENDED WALL CONSTRUCTION JOINT LOCATIONS ARE SHOWN ON THIS PLAN AS ~ . THE CONTRACTOR MAY PROPOSE ALTERNATE JOINT LOCATIONS FOR APPROVAL. INDIVIDUAL WALL SEGMENTS MUST NOT BE LONGER THAN 30'. ALL CAST WALL SEGMENTS MUST BE ALLOWED TO CURE, WITH THE WALL FORMS IN PLACE, FOR A MINIMUM OF 72 HOURS PRIOR TO CASTING ANY ADJOINING WALL SEGMENTS. WALL TOP MUST BE KEPT COVERED AND WET DURING CURING PROCESS.
3. ALL FLUID CONTAINING STRUCTURE SLABS MUST BE WET CURED FOR A MINIMUM OF 72 HOURS.
4. LEAK TESTING – CONTRACTOR SHALL PERFORM A FULL HYDROSTATIC HEAD LEAK TEST ON EACH BASIN OF THE STRUCTURE AND REPORT THE RESULTS TO THE OWNER AND THE ENGINEER OF RECORD. EACH INDIVIDUAL BASIN MUST BE TESTED WITH ALL ADJOINING BASINS EMPTY. ALL LEAKS DETECTED SHALL BE SEALED BY EPOXY INJECTION PERFORMED BY A CERTIFIED TECHNICIAN. ALL LEAK TESTING MUST BE PERFORMED PRIOR TO BACKFILLING AROUND STRUCTURE. RE-TEST AFTER ALL REPAIRS. VISABLE MOISTURE WILL BE CONSIDERED A LEAK. SUBMIT EPOXY INJECTION PROCEDURE DETAILS FOR APPROVAL PRIOR TO PEERFORMING REPAIRS.

MAIN PLANT FOUNDATION PLAN

SCALE: 3/16"=1'-0"

NORTH

STATE OF TEXAS
JACK HARRISON
85472
LICENSED PROFESSIONAL ENGINEER
12-31-12

Structural Design Consulting
100 Park Road South
Kerrville, TX 78028
T.B.P.E. FIRM #4688
Office 830-935-2640

Jay Engineering Company, Inc.
P.O. Box 1220
Leander, Texas 78646-1220
Tel: (512) 259-3882 Fax: (512) 259-8016
Texas Registered Engineering Firm F-4780

WRP, OFFSITE LIFT STA. & RECLAIMED WATER PUMP STA.
CRYSTAL FALLS WEST - SEC. 1

MAIN PLANT FOUNDATION PLAN

THE LOOKOUT GROUP

SCALE: AS NOTED DWN: JWH DESIGN: JWH DATE: DEC 2012
DWG. NO. AS NOTED JOB NO. 12782012

no.	date	Revisions	app'v.

Sheet
S.1.0

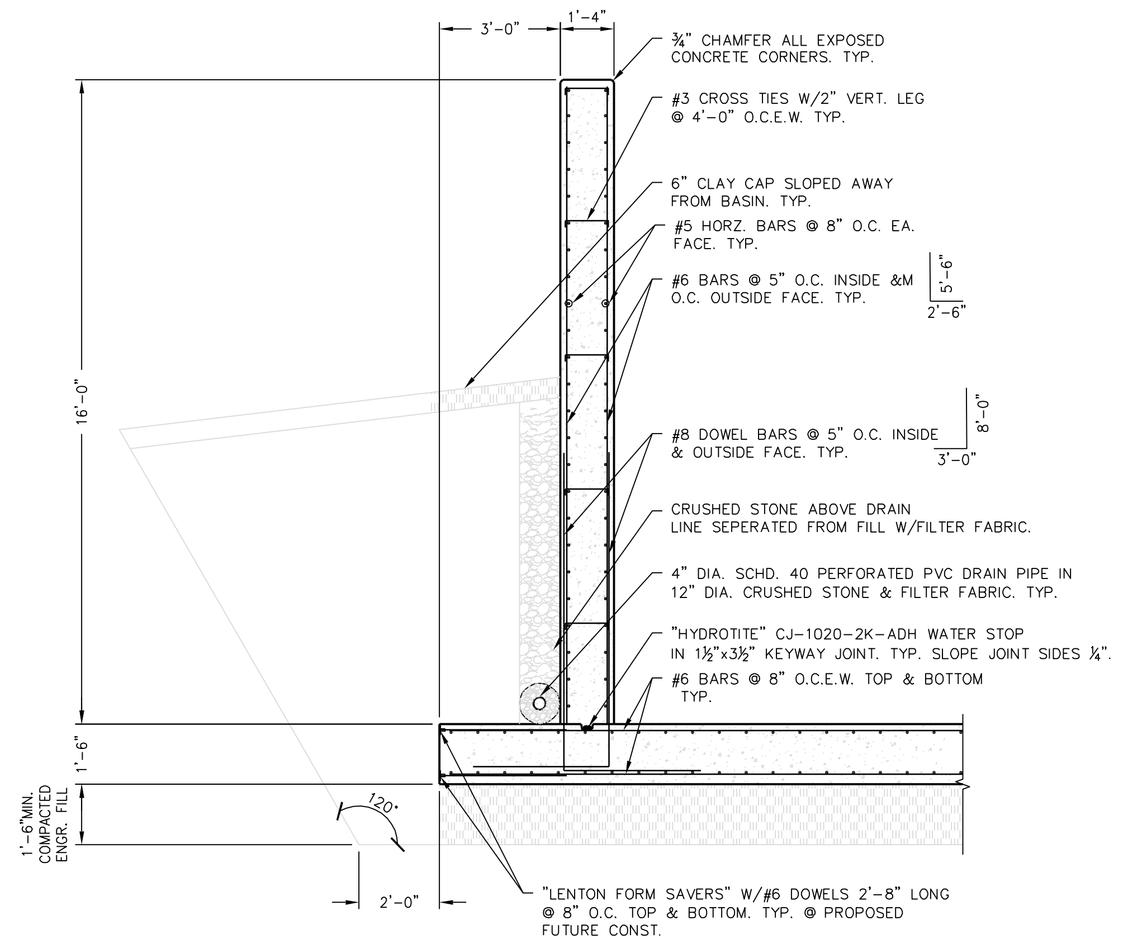

1 S.5.0 EXTERIOR BASIN WALL SECTION
SCALE : 3/8"=1'-0"

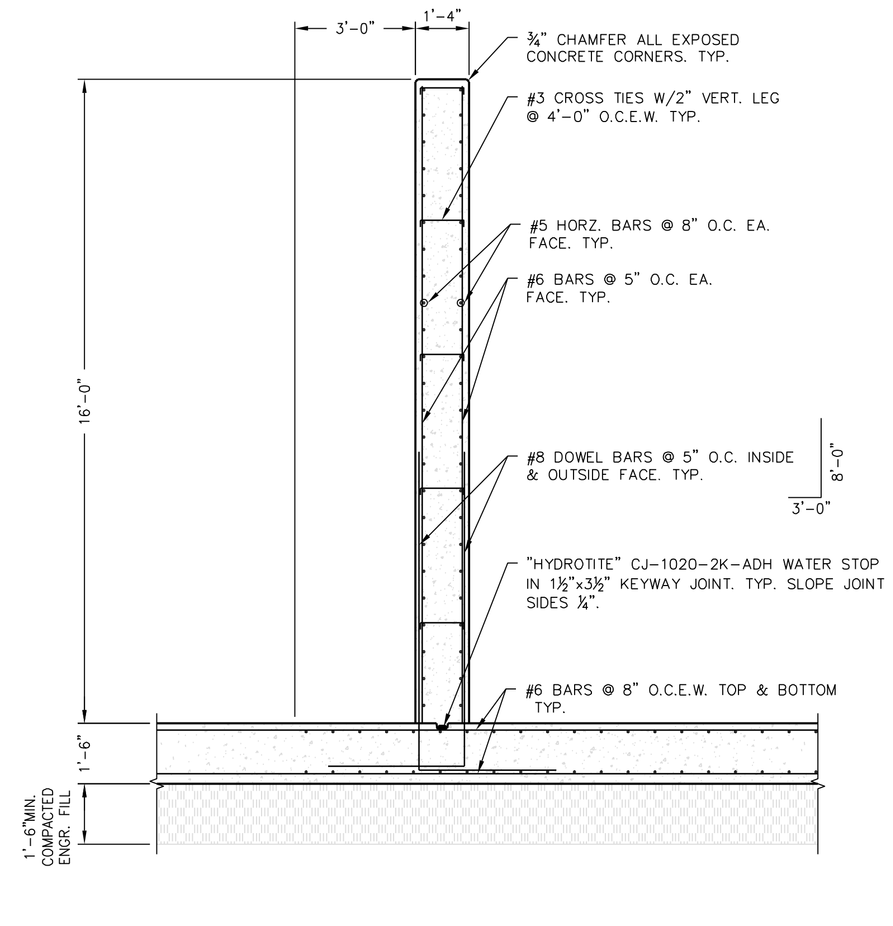

2 S.5.0 INTERIOR BASIN WALL SECTION
SCALE : 3/8"=1'-0"

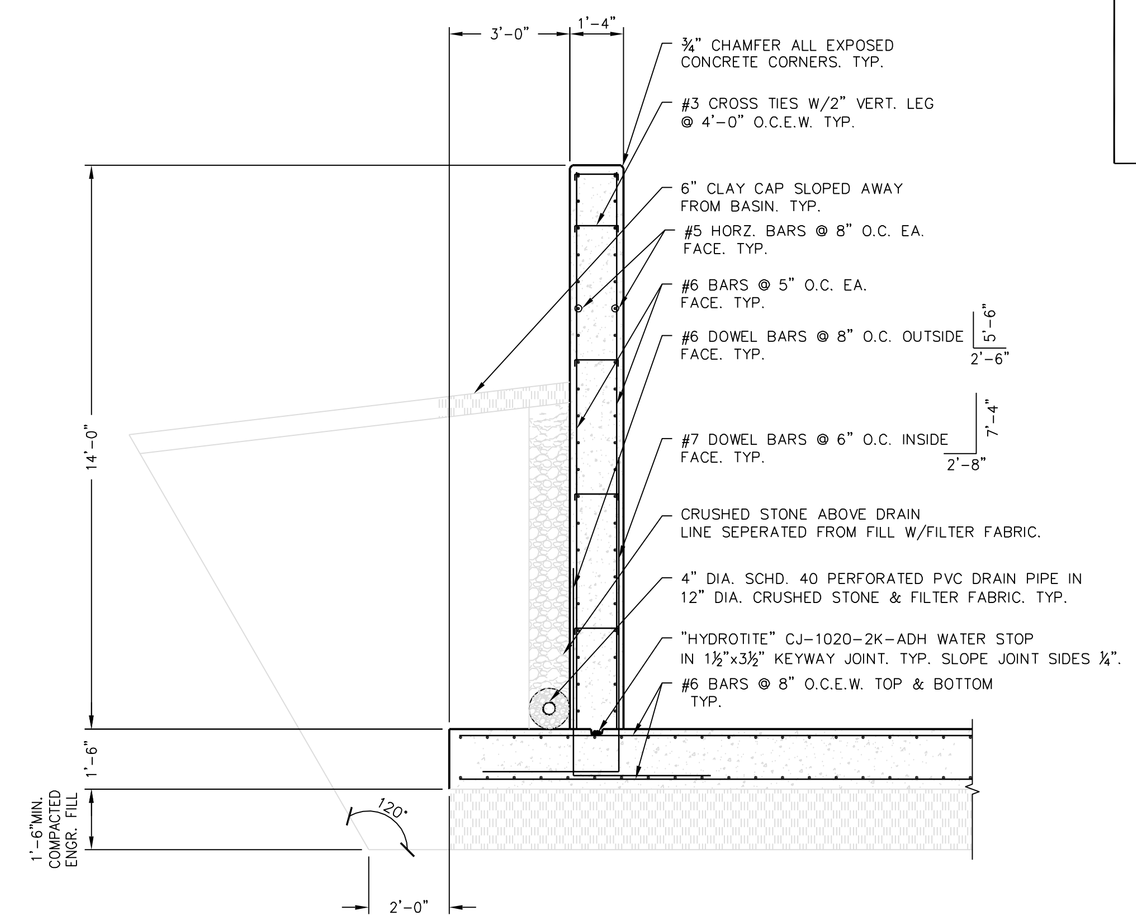

3 S.5.0 CHLORINE BASIN WALL SECTION
SCALE : 3/8"=1'-0"

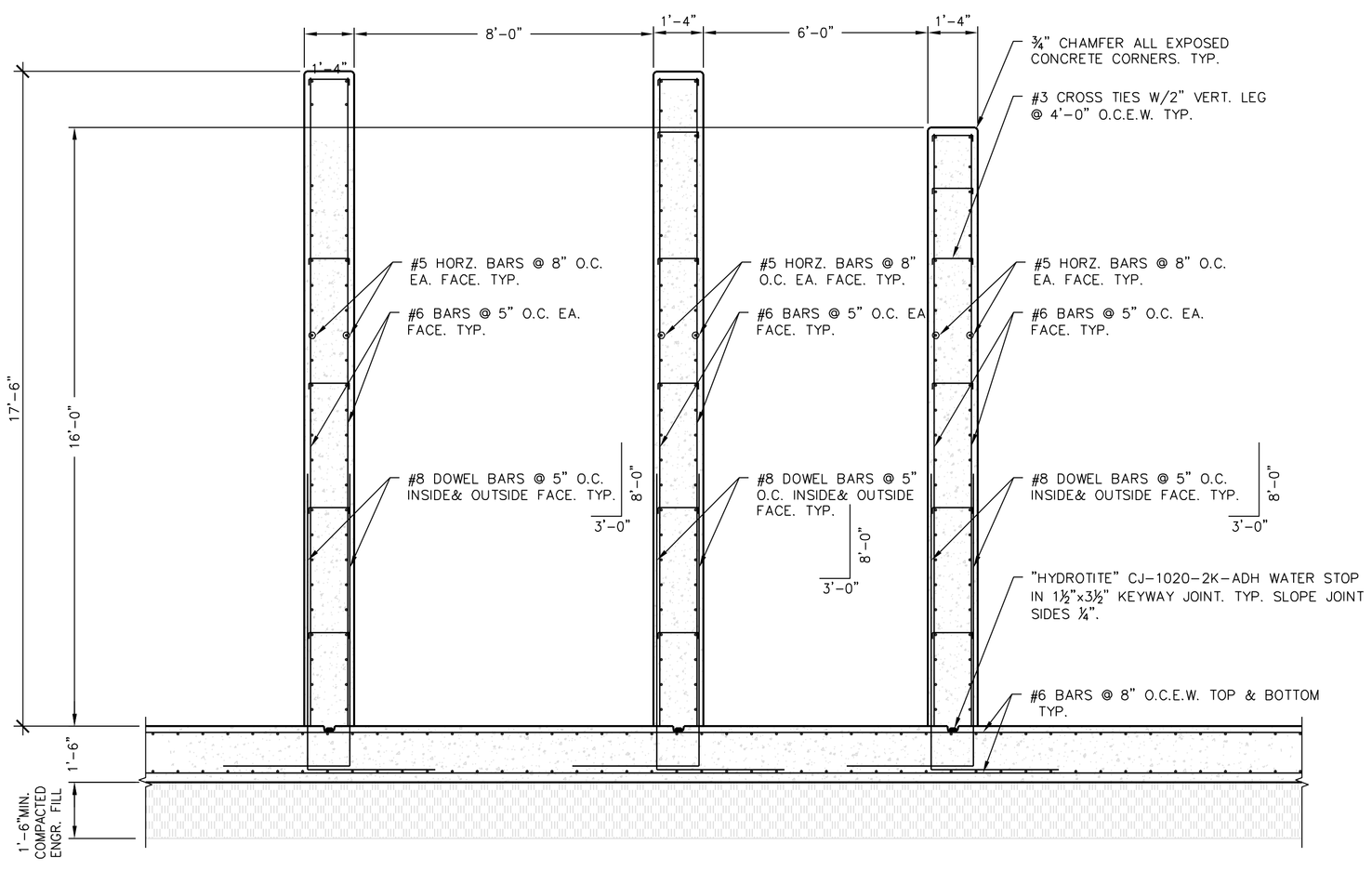

4 S.5.0 ANOXIX #1 & RAPID MIX BASIN SECTION
SCALE : 3/8"=1'-0"

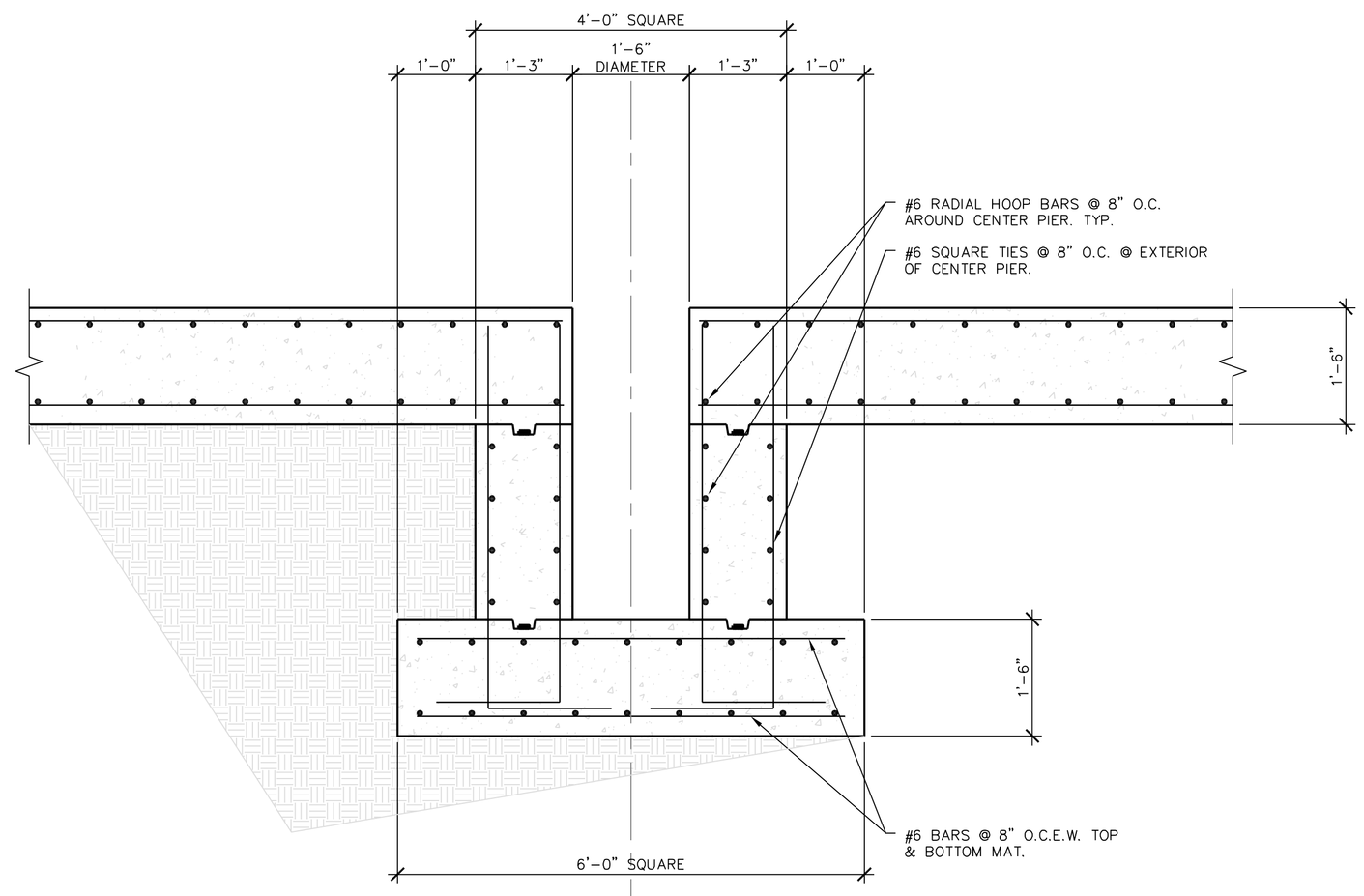

5 S.5.0 CENTER PIER SECTION
SCALE : 3/4"=1'-0"

STATE OF TEXAS
JACK HARRISON
85472
LICENSED
PROFESSIONAL ENGINEER
12-31-12

Structural Design Consulting
100 Park Road South
Kerrville, TX 78028
T.B.P.E. FIRM #4888
Office 830-935-2840

Jay Engineering Company, Inc.
P.O. Box 1220
Leander, Texas 78646-1220
Tel: (512) 259-3882 Fax: (512) 259-8016
Texas Registered Engineering Firm F-4780

WRP, OFFSITE LIFT STA. & RECLAIMED WATER PUMP STA.
CRYSTAL FALLS WEST - SEC. 1

WALL SECTIONS & DETAILS

THE LOOKOUT GROUP

SCALE: AS NOTED DWN: JWH DESIGN: JWH DATE: DEC 2012
DWG. NO. AS NOTED JOB NO. 12782012

no.	date	Revisions	appv.

Sheet
S.5.0

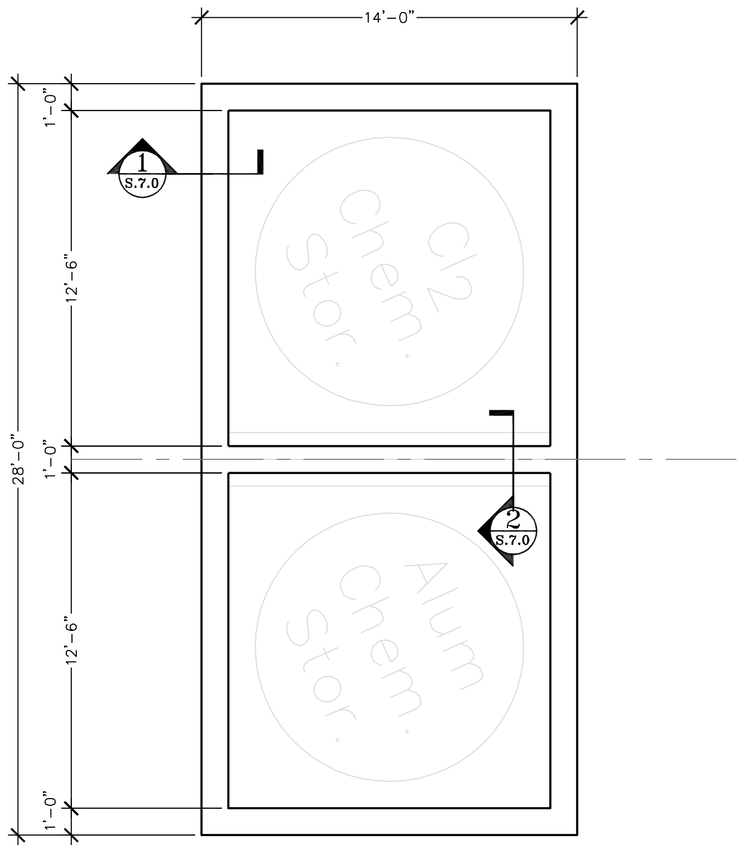

NORTH

1 S.6.0 CHEMICAL STORAGE FOUNDATION PLAN
SCALE : 1/4"=1'-0"

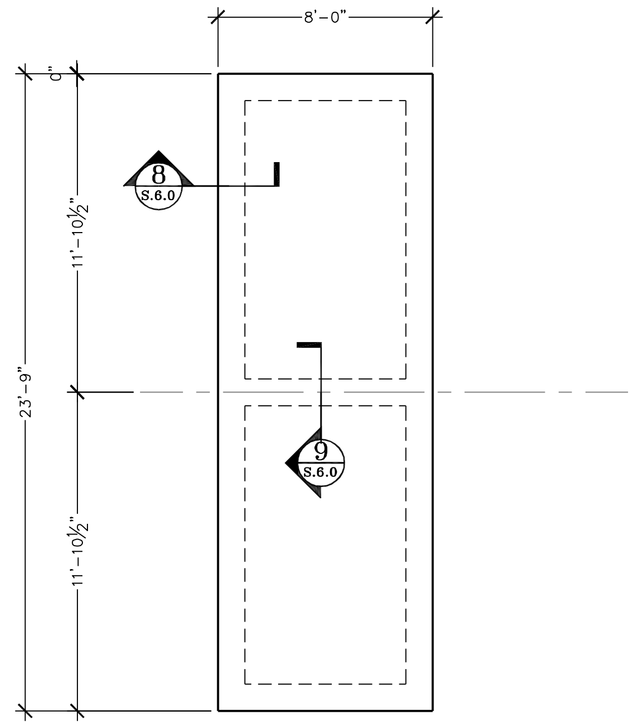

NORTH

2 S.6.0 FILTER PAD FOUNDATION PLAN
SCALE : 1/4"=1'-0"

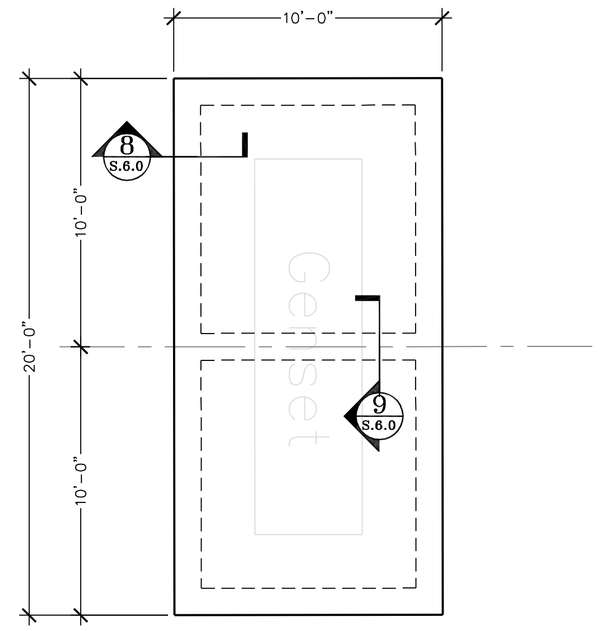

NORTH

3 S.6.0 GEN-SET FOUNDATION PLAN
SCALE : 1/4"=1'-0"

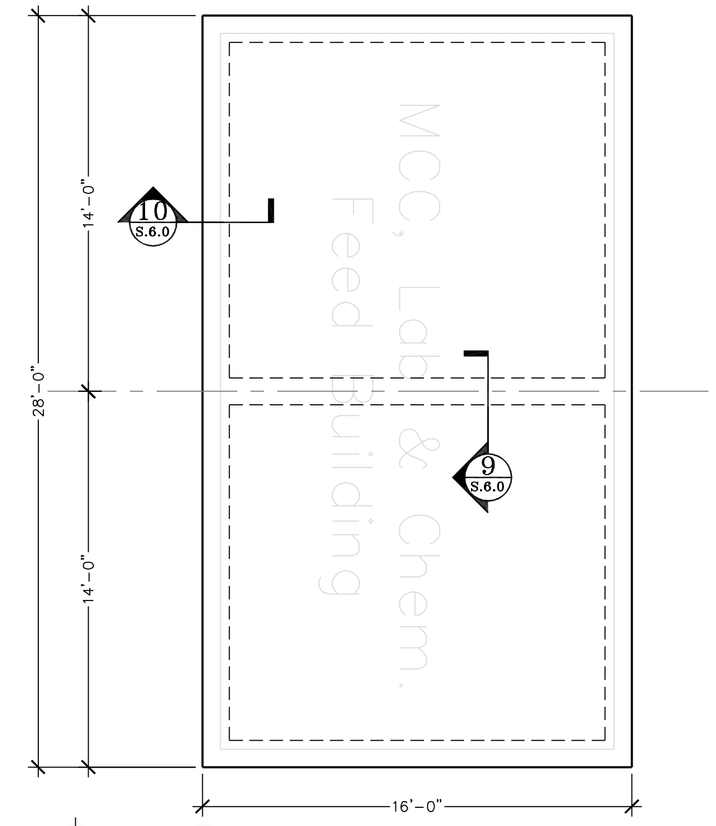

NORTH

4 S.6.0 MCC/LAB FOUNDATION PLAN
SCALE : 1/4"=1'-0"

NOTE: ACHIEVE SLOPE TO DRAIN OF ¼"/FT. MIN. ON HOLLOW CORE PLANK ROOF W/TAPERED INSULATION. TYP.

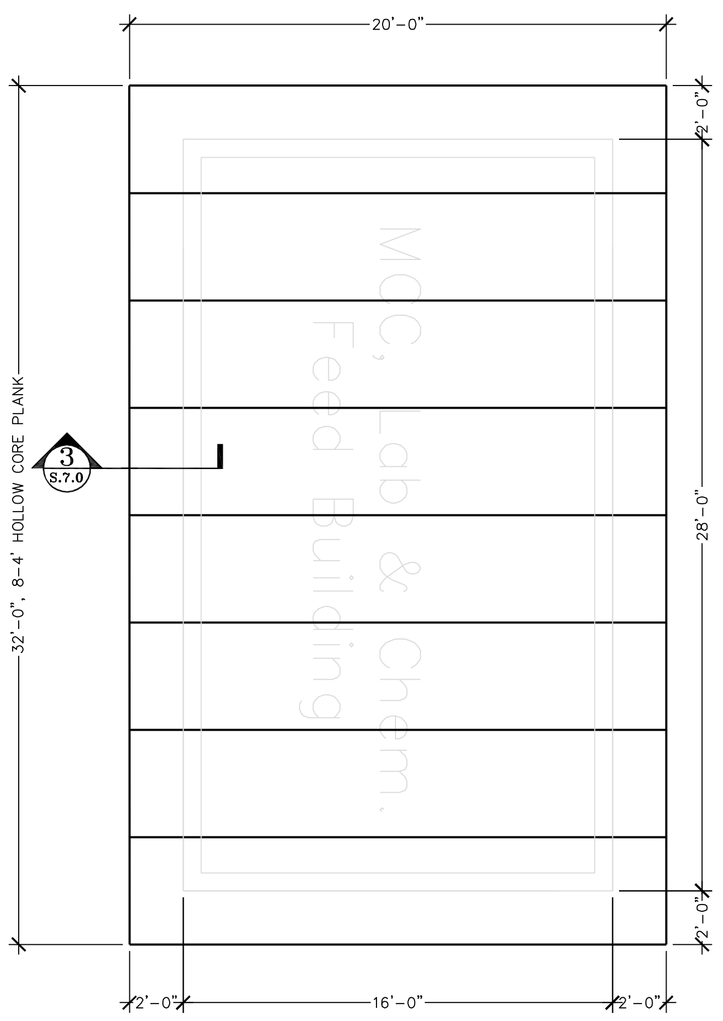

NORTH

5 S.6.0 MCC/LAB ROOF PLAN
SCALE : 1/4"=1'-0"

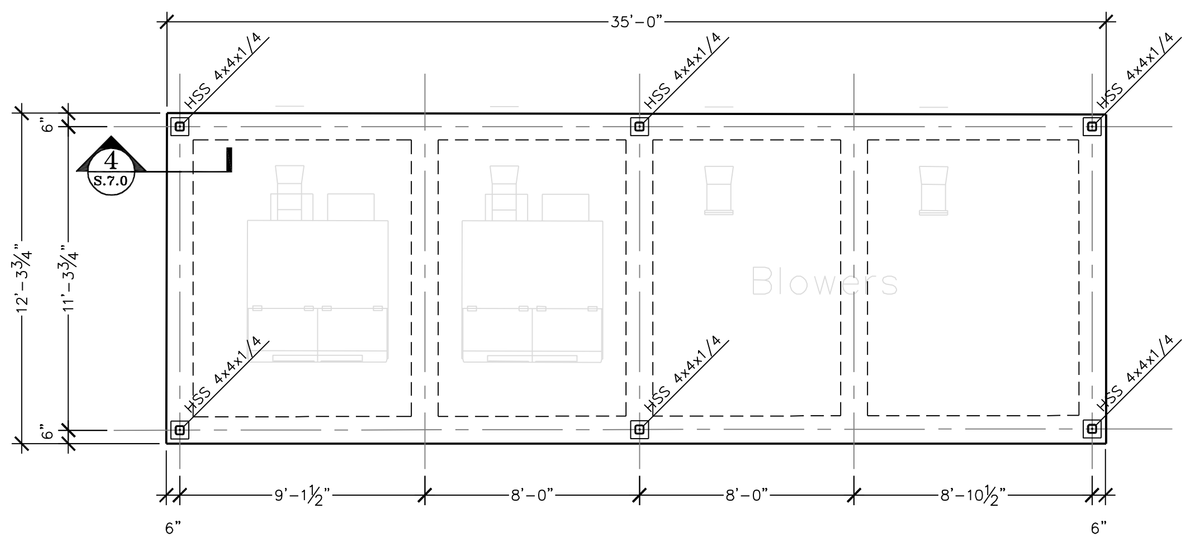

NORTH

6 S.6.0 BLOWERS FOUNDATION PLAN
SCALE : 1/4"=1'-0"

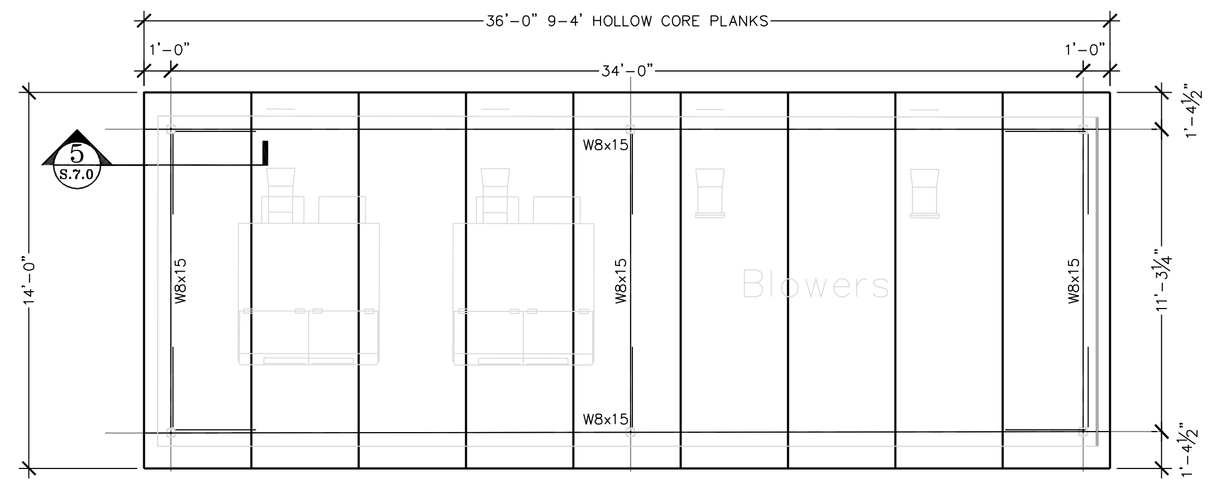

NORTH

7 S.6.0 BLOWERS ROOF PLAN
SCALE : 1/4"=1'-0"

NOTE: BOTTOM OF ALL EXTERIOR BEAMS TO BE A MINIMUM OF 12" BELOW FINISH GRADE.

NOTE: IF BEAM DEPTH IS 30" OR GREATER ADD #4 HORZ. BARS @ 12" O.C. VERT. EA. FACE.

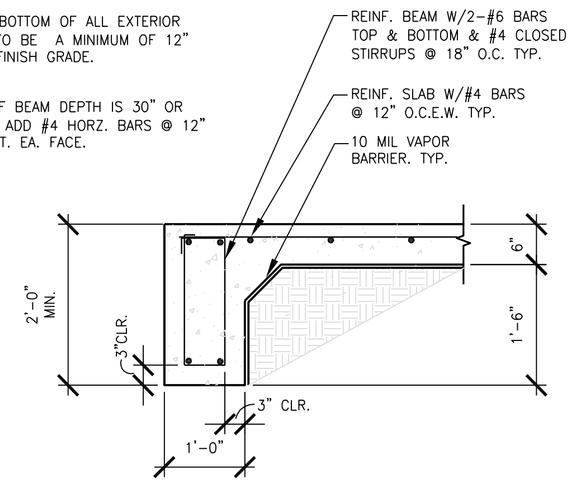

7 S.6.0 TYP. EXTERIOR BEAM
SCALE : 3/4"=1'-0"

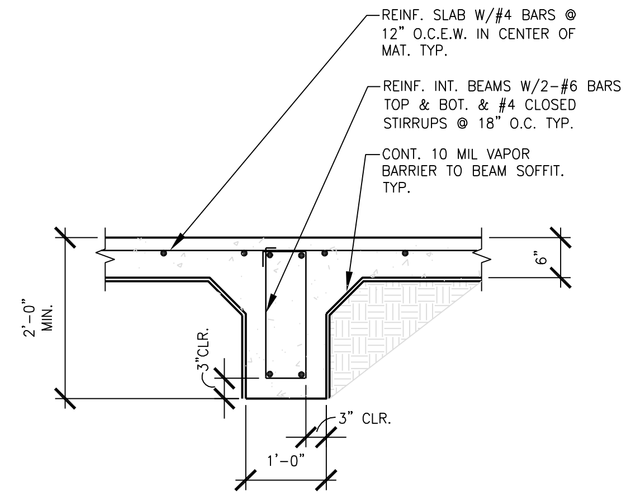

9 S.6.0 TYP. INTERIOR BEAM
SCALE : 3/4"=1'-0"

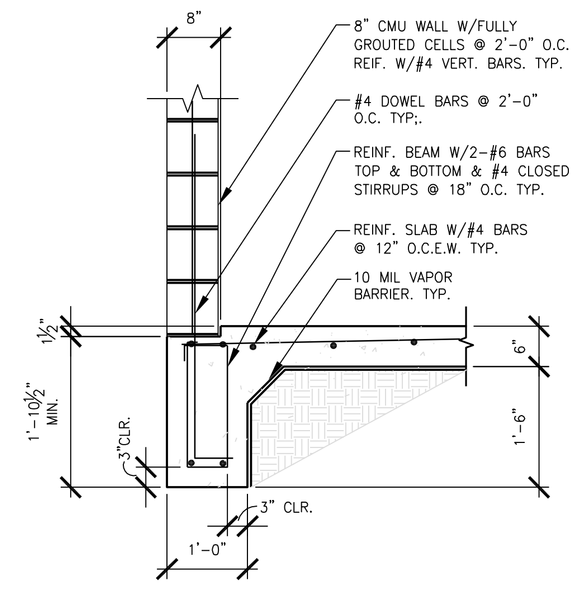

10 S.6.0 TYP. INTERIOR BEAM
SCALE : 3/4"=1'-0"

STATE OF TEXAS
JACK HARRISON
85472
LICENSED
PROFESSIONAL ENGINEER
12-31-12

Structural Design Consulting
100 Park Road South
Kerrville, TX 78028
T.B.P.E. FIRM #4688
Office 830-935-2640

Jay Engineering Company, Inc.
P.O. Box 1220
Leander, Texas 78646-1220
Tel: (512) 259-3882 Fax: (512) 259-8016
Texas Registered Engineering Firm F-4780

WRP, OFFSITE LIFT STA. & RECLAIMED WATER PUMP STA.
CRYSTAL FALLS WEST - SEC. 1

MECHANICAL FOUNDATION & ROOF FRAMING PLANS & DETAILS

THE LOOKOUT GROUP

SCALE: AS NOTED | DWN: JWH | DESIGN: JWH | DATE: DEC 2012
DWG. NO. AS NOTED | JOB NO. 12782012

no.	date	Revisions	appv.

Sheet
S.6.0

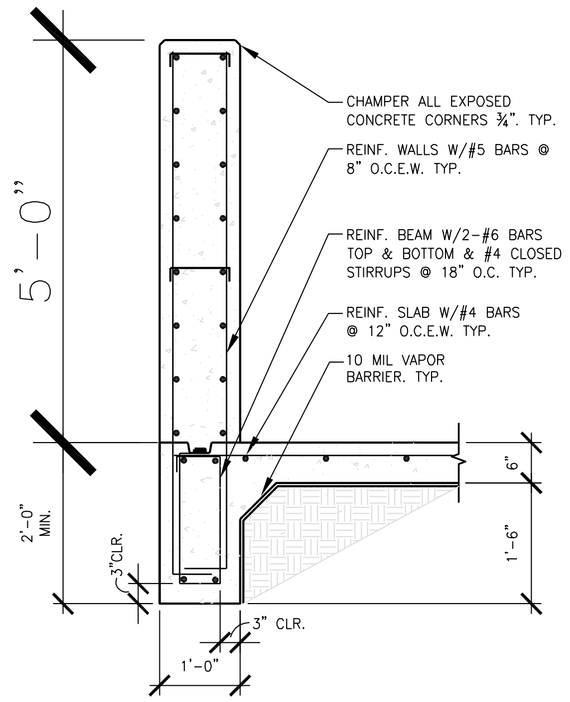

1 S.7.0 EXTERIOR BEAM @ CHEM. STORAGE
SCALE : 3/4"=1'-0"

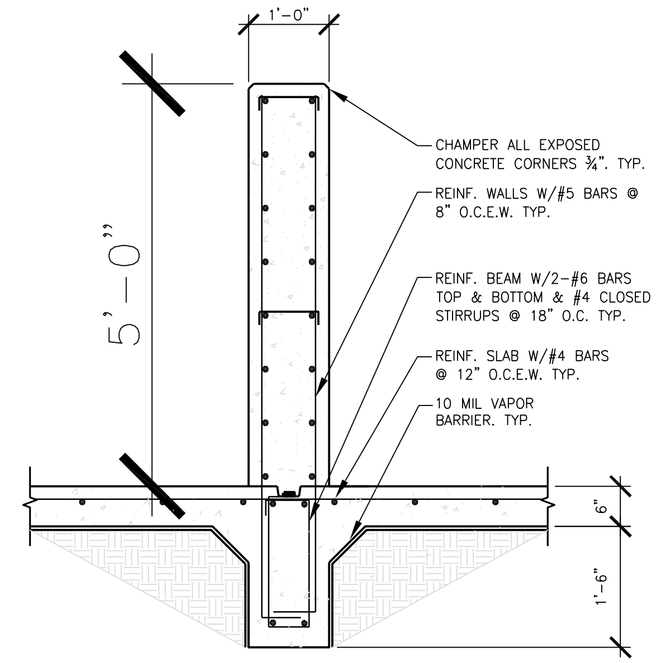

2 S.7.0 EXTERIOR BEAM @ CHEM. STORAGE
SCALE : 3/4"=1'-0"

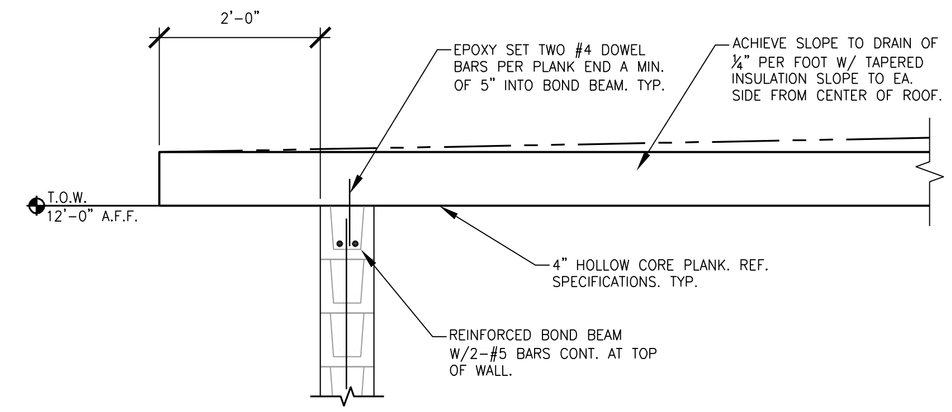

3 S.7.0 HOLLOW CORE PLANK ROOF DETAIL
SCALE : 3/4"=1'-0"

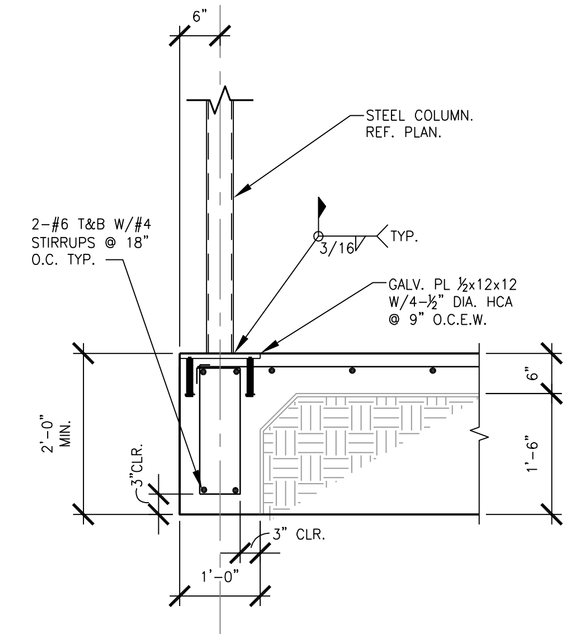

4 S.7.0 EXT. BEAM DETAIL
SCALE : 3/4"=1'-0"

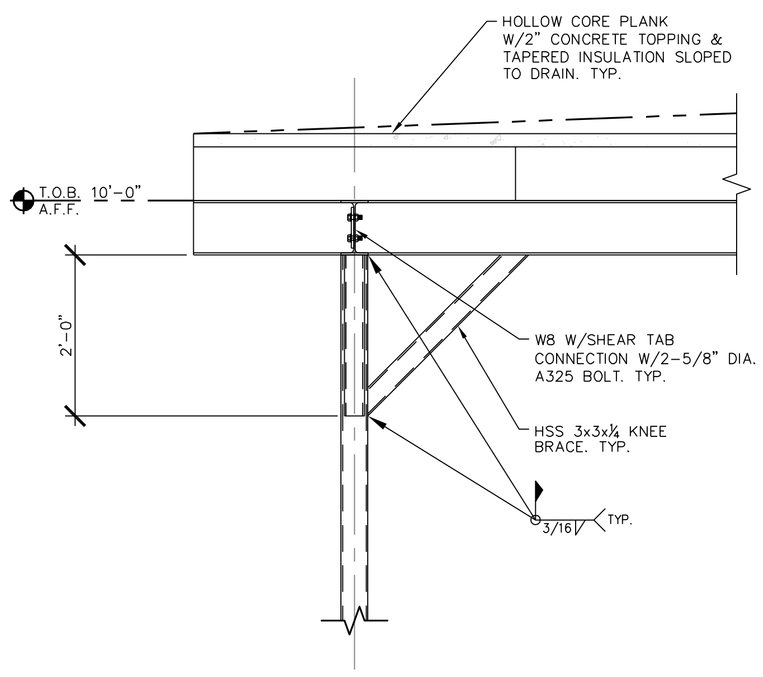

5 S.7.0 BLOWER ROOF DETAIL
SCALE : 3/4"=1'-0"

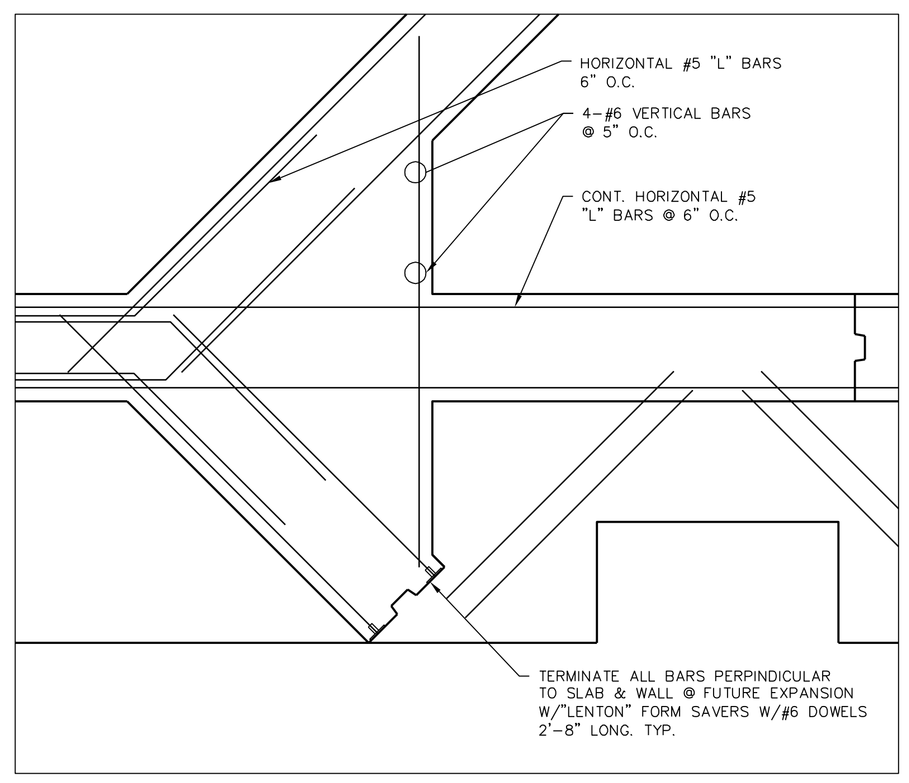

6 S.7.0 CLARIFIER WALL CORNER FRAMING DETAIL
SCALE : 3/4"=1'-0"

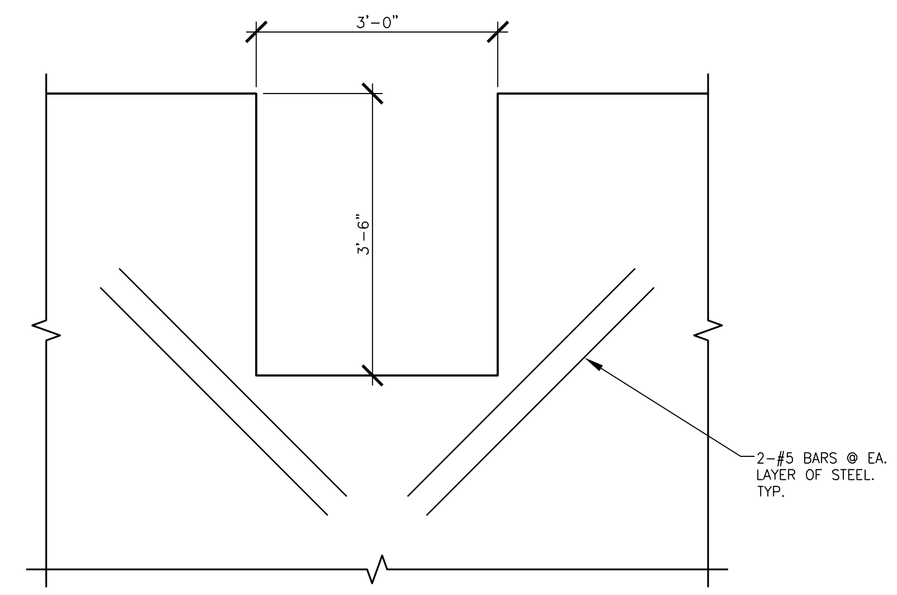

7 S.7.0 TOP OF WALL OPENING DETAIL
SCALE : 3/4"=1'-0"

STATE OF TEXAS
JACK HARRISON
85472
LICENSED
PROFESSIONAL ENGINEER
12-31-12

Structural Design Consulting
100 Park Road South
Kimberly, KY 78676
T.B.P.E. FIRM #4888
Office 830-935-2640

Jay Engineering Company, Inc.
P.O. Box 1220
Leander, Texas 78646-1220
Tel. (512) 259-3882 Fax. (512) 259-8016
Texas Registered Engineering Firm F-4780

WRP, OFFSITE LIFT STA. & RECLAIMED WATER PUMP STA.
CRYSTAL FALLS WEST - SEC. 1

SECTIONS & DETAILS

THE LOOKOUT GROUP

SCALE: AS NOTED DWN: JWH DESIGN: JWH DATE: DEC 2012
DWG. NO. AS NOTED JOB NO. 12782012

no.	date	Revisions	appv.

Sheet
S.7.0

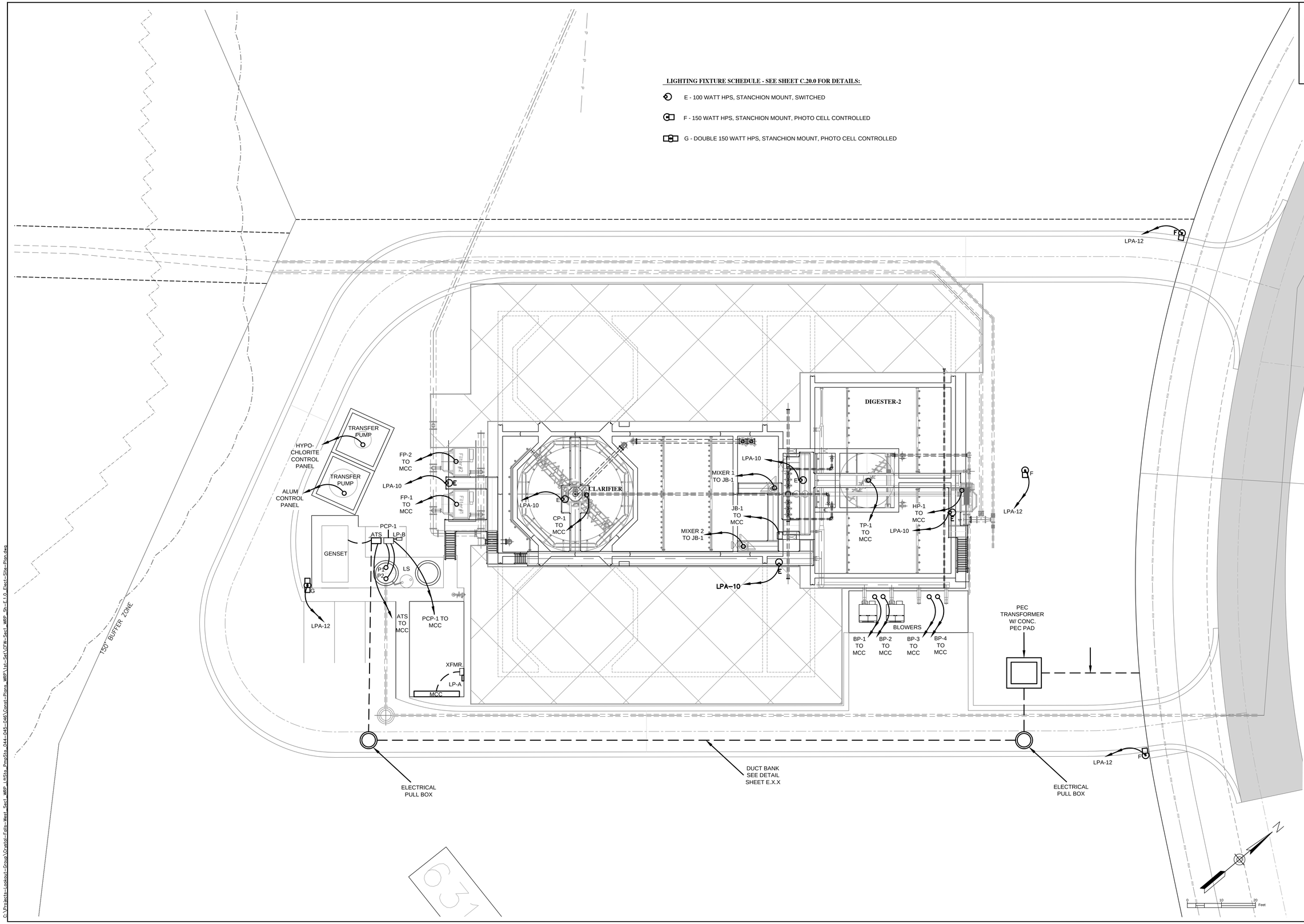

FOR REVIEW ONLY

THIS DOCUMENT IS RELEASED FOR THE PURPOSE OF REVIEW ONLY, BY:

NAME: Frank T. Phelan

P.E. No.: 93874

NOT INTENDED FOR BIDDING OR CONSTRUCTION PURPOSES.

Jay Engineering Company, Inc.
P.O. Box 1220
Lakeway, Texas 78646-1220
Tel: (512) 259-3882 Fax: (512) 259-8016
Texas Registered Engineering Firm F-4780

WRP, OFFSITE LIFT STA. & RECLAIMED WATER PUMP STA.
CRYSTAL FALLS WEST - SEC. 1

ELECTRICAL SITE PLAN

THE LOOKOUT GROUP

SCALE: AS NOTED | DWN: JJD | DESIGN: FAJ | DATE: OCT 2012

DWG. NO. AS NOTED | JOB NO. 157-045-20

no.	date	Revisions	appv.

Sheet
E.1.0

C:\Projects-Lookout-Group\Crystal-Falls-West_Sec1_WRP_LiftSta_PmpSta_044-045-046\Const-Plans_WRP\1st-Set\CFW-Sec1_WRP_Sh-E.1.0_Elect-Site-Plan.dwg

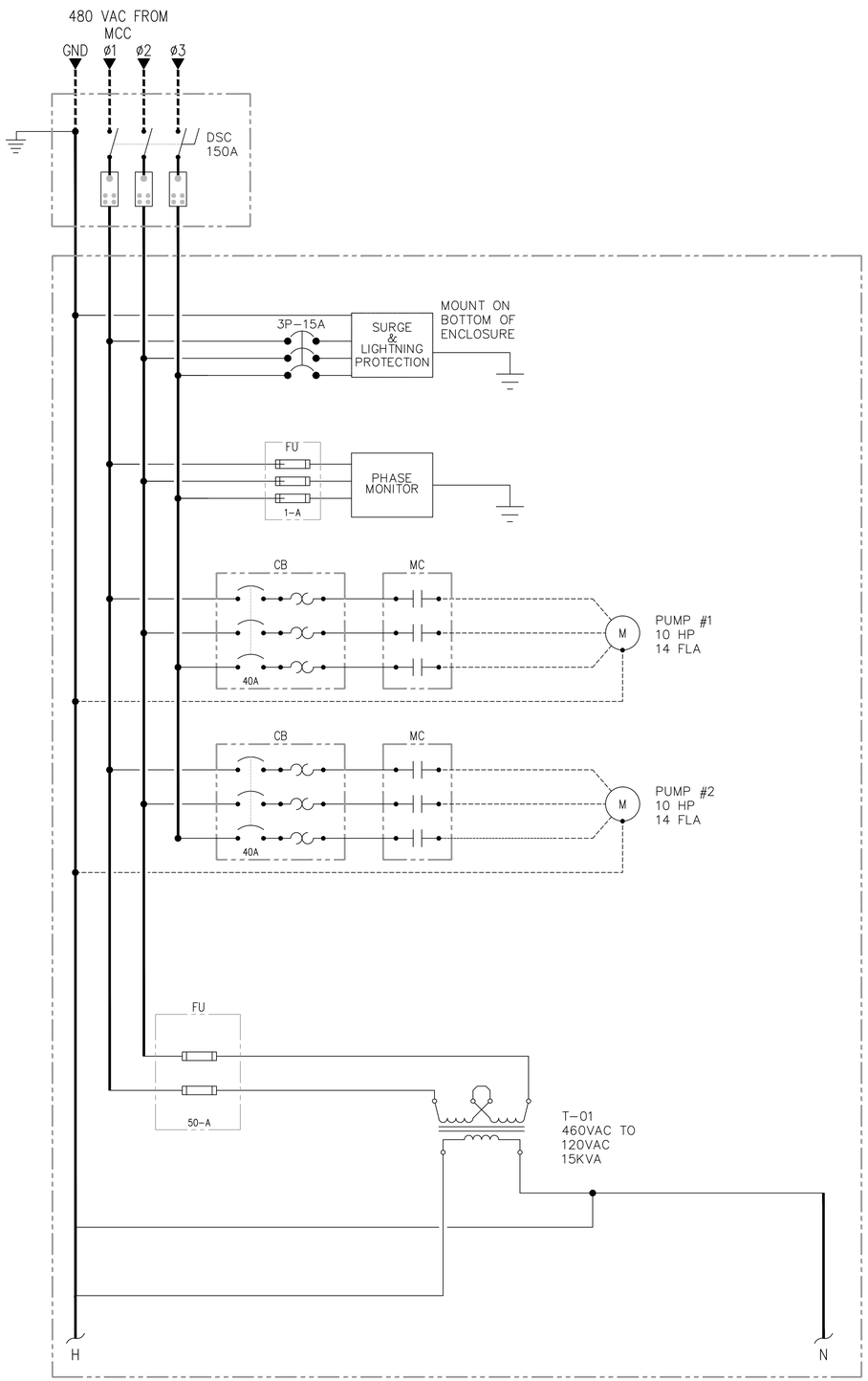

CIRCUIT BREAKER PANEL LP-B SCHEDULE 10K AIC

VOLTS: 120 AMPS: 100 MCB: 80 PHASE/WIRING: 1ø

CIRCUIT BREAKER SIZE	CKT. NO.	LOAD DESCRIPTION	PHASE A	PHASE B	LOAD DESCRIPTION	CKT. NO.	CIRCUIT BREAKER SIZE
15A	1	PUMP CONTROLS			GFCI RECEPTACLE	2	15A
15A	3	PANEL LIGHT			SPARE	4	15A
15A	5	SHELTER LIGHT			SPARE	6	20A
	7					8	
	9					10	
	11					12	
	13					14	

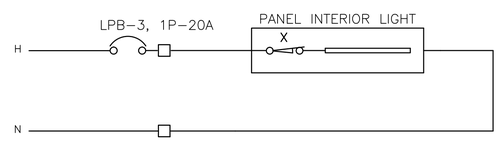

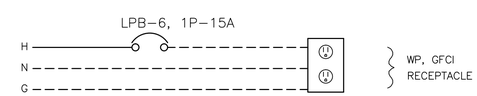

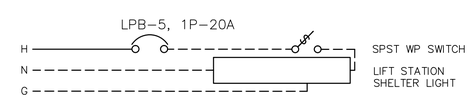

KEYNOTES:

1. OVERLOAD INTERNAL TO STARTER.
2. CURRENT SENSOR INTERNAL TO STARTER.
3. MINIMIZE LENGTH OF SURGE PROTECTOR LEADS AVOID BENDS. USE LOW IMPEDANCE WIRE. FOLLOW MANUFACTURER'S RECOMMENDATIONS.

☐ – TB CONNECTION

SEE ONE–LINE DIAGRAM FOR WIRE SIZE.

SUBMIT ELECTRICAL POWER DIAGRAM FOR ENGINEERING APPROVAL

FOR REVIEW ONLY

THIS DOCUMENT IS RELEASED FOR THE PURPOSE OF REVIEW ONLY. BY:

NAME: Frank T. Phelan

P.E. No.: 93874

NOT INTENDED FOR BIDDING OR CONSTRUCTION PURPOSES.

Jay Engineering Company, Inc.
P.O. Box 1220
Leander, Texas 78646-1220
Tel: (512) 259-3080 Fax: (512) 259-9016
Texas Registered Engineering Firm F–4780

CRYSTAL FALLS WEST - SEC. 1
WRP, OFFSITE LIFT STA. & RECLAIMED WATER PUMP STA.

LIFT STATION ELECTRICAL POWER DIAGRAM

THE LOOKOUT GROUP

SCALE: AS NOTED DWN: JJO DESIGN: FAJ DATE: DEC 2012
DWG. NO. AS NOTED JOB NO. 157–045–20

no.	date	Revisions	appv.

Sheet
E.2.0

C:\Projects-Lookout-Group\Crystal-Falls-West_Sec1_WRP_LIftSta_PmpSta_044-045-046\Const-Plans_WRP\1st-Set\CFW-Sec1_WRP_Sh-E.2.0_LS-Elect-Power-Diagram.dwg

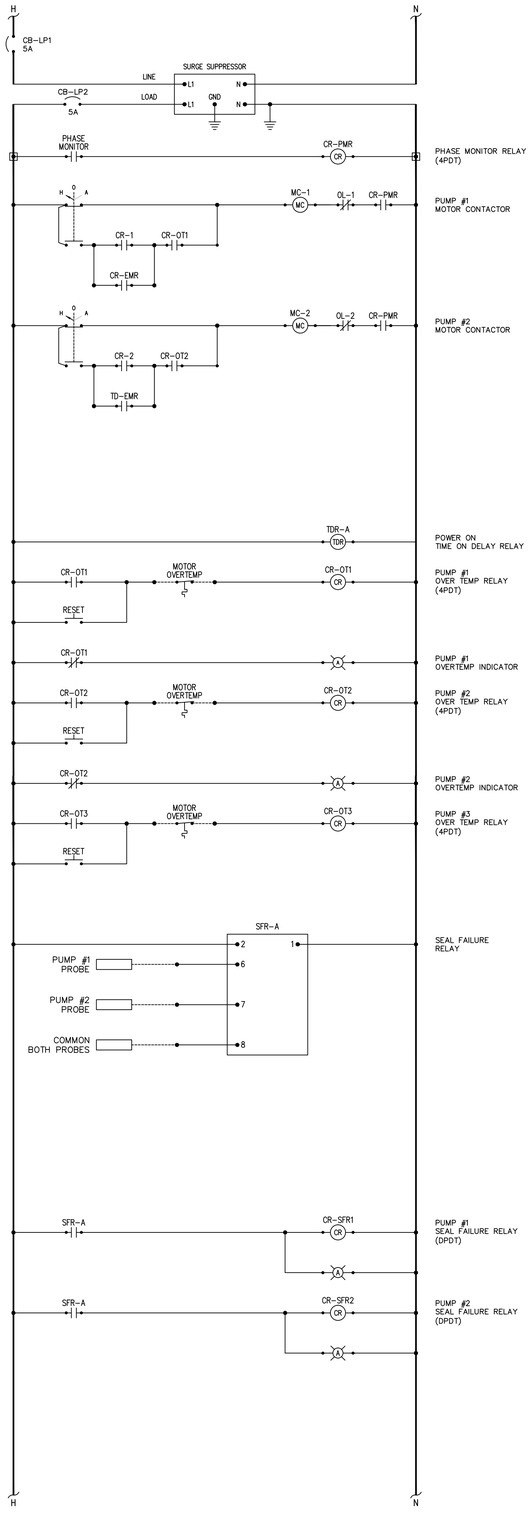

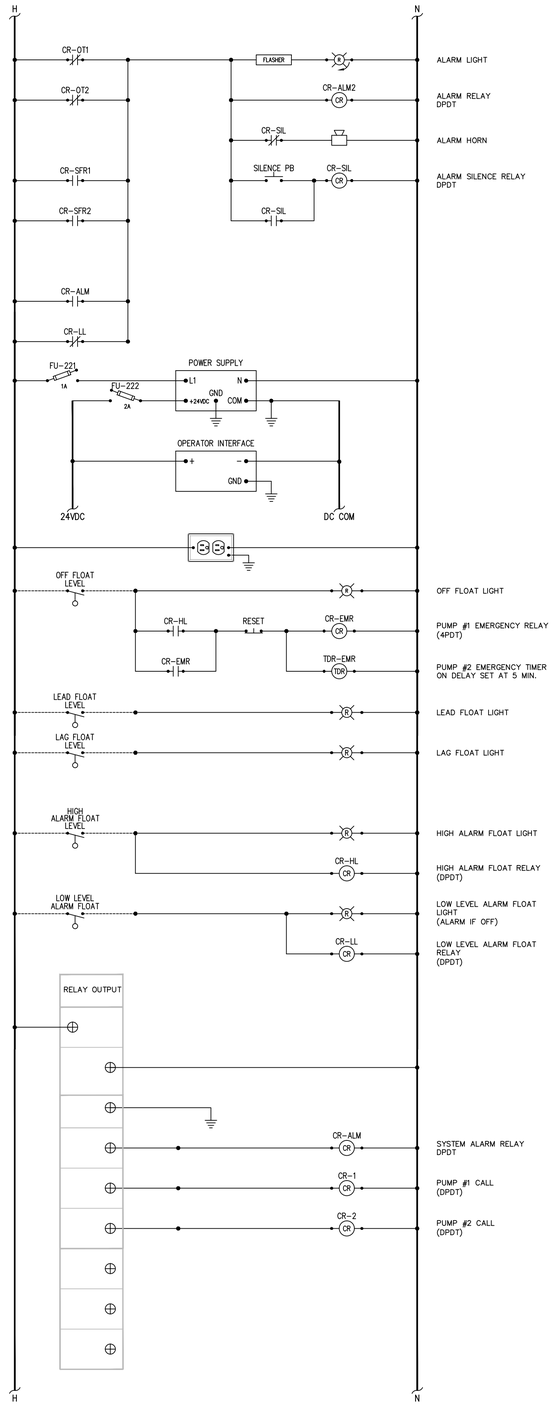

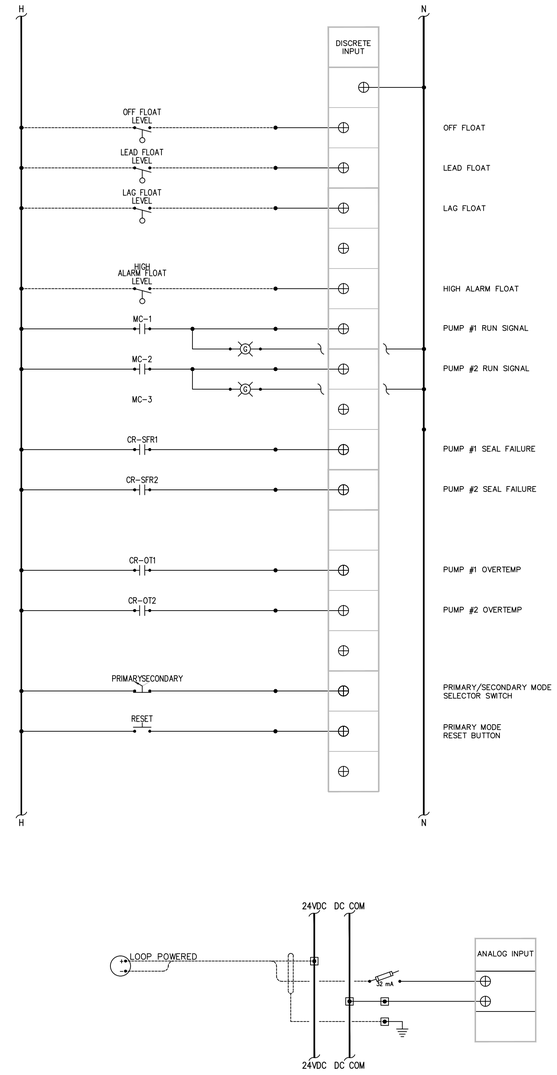

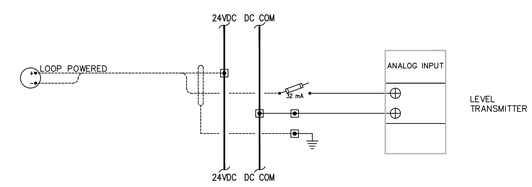

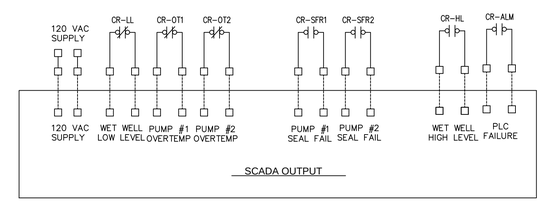

CITY OF LEANDER SCADA SYSTEM

GENERAL NOTES:

1. PRIMARY PUMP CONTROL TO BE VIA LEVEL SENSOR INPUT THROUGH PLC.
2. IN CASE OF A LEVEL SENSOR INPUT FAILURE, PLC TO AUTOMATICALLY SWITCH TO FLOAT INPUT FOR PUMP OPERATION.
3. IN THE EVENT OF A PLC FAILURE, PUMPS TO SWITCH TO AUTOMATIC TIMER OPERATION.
4. DUCT SEAL CABLE ENTRANCES FROM WET WELL INTO J-BOX AND PUMP CONTROL PANEL.
5. ALL WORK TO BE PER NEC, LATEST EDITION.
6. SUBMIT ELECTRICAL ONE-LINE DIAGRAMS AND PUMP CONTROL SCHEMATICS FOR ENGINEERING APPROVAL.

FOR REVIEW ONLY

THIS DOCUMENT IS RELEASED FOR THE PURPOSE OF REVIEW ONLY, BY:

NAME: Frank T. Phelan

P.E. No.: 93874

NOT INTENDED FOR BIDDING OR CONSTRUCTION PURPOSES.

Jay Engineering Company, Inc.
P.O. Box 1220
Leander, Texas 78646-1220
Tel: (512) 259-3882 Fax: (512) 259-9016
Texas Registered Engineering Firm F-4780

CRYSTAL FALLS WEST - SEC. 1
WRP, OFFSITE LIFT STA. & RECLAIMED WATER PUMP STA.

LIFT STATION ELECTRICAL SCHEMATIC & PUMP CONTROL SCHEMATIC

THE LOOKOUT GROUP

SCALE: AS NOTED | DWN: JJD | DESIGN: FAJ | DATE: DEC 2012
DWG. NO. AS NOTED | JOB NO. 157-045-20

no.	date	Revisions	appv.

Sheet
E.3.0

C:\Projects-Lookout-Group\Crystal-Falls-West_Sec1_WRP_LftSta_PrepSta_044-045-046\Const-Plans_WRP\1st-Set\CFW-Sec1_WRP_SH-E.3.0_LS-Elect-Schmtic-Pump-Cntrl.dwg

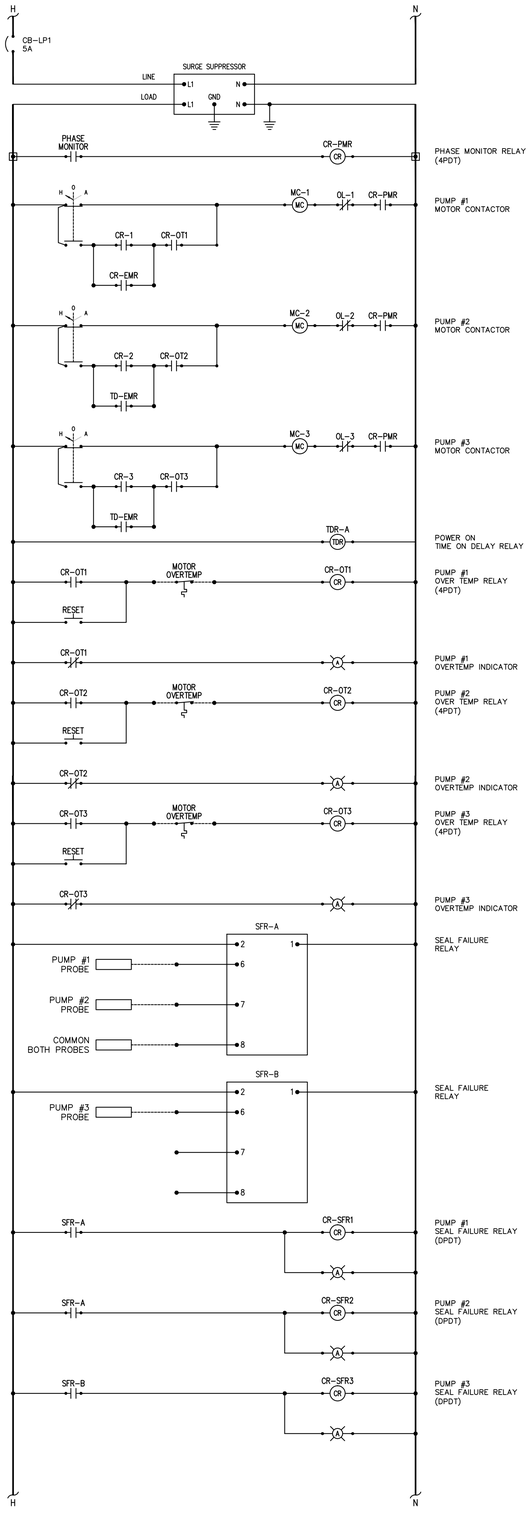

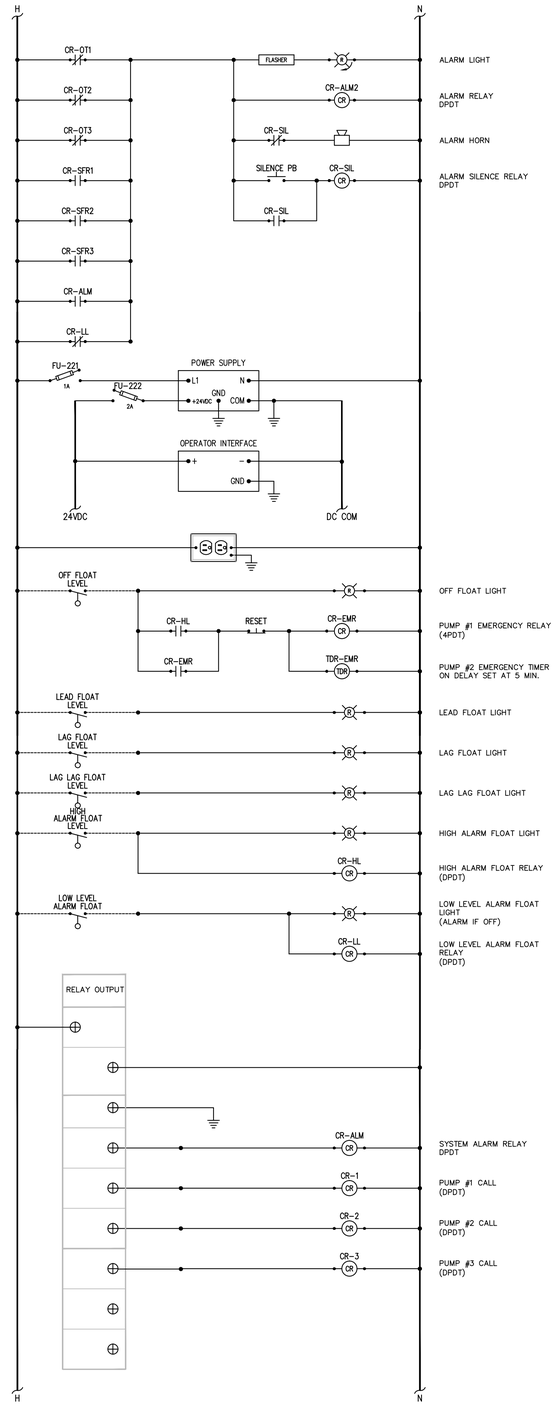

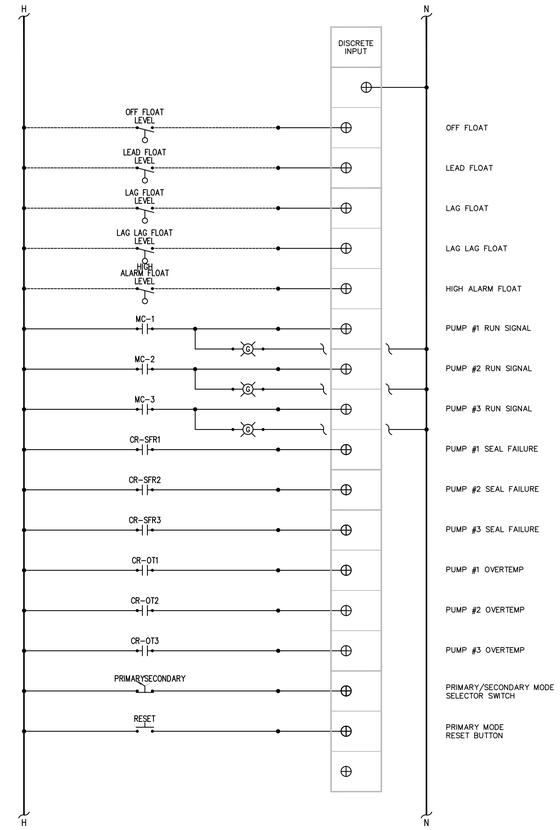

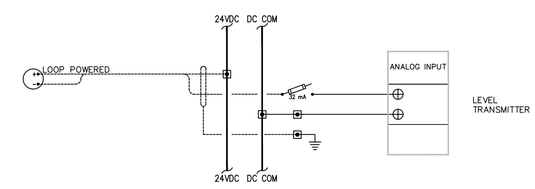

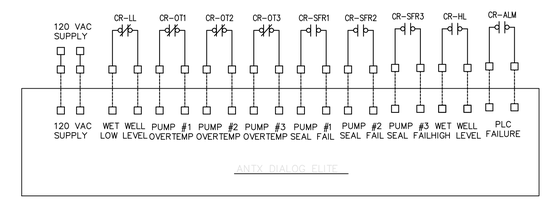

AUTO DIALER

GENERAL NOTES:

1. PRIMARY PUMP CONTROL TO BE VIA LEVEL SENSOR INPUT THROUGH PLC.
2. IN CASE OF A LEVEL SENSOR INPUT FAILURE, PLC TO AUTOMATICALLY SWITCH TO FLOAT INPUT FOR PUMP OPERATION.
3. IN THE EVENT OF A PLC FAILURE, PUMPS TO SWITCH TO AUTOMATIC TIMER OPERATION.
4. DUCT SEAL CABLE ENTRANCES FROM WET WELL INTO J-BOX AND PUMP CONTROL PANEL.
5. ALL WORK TO BE PER NEC, LATEST EDITION.
6. SUBMIT ELECTRICAL ONE-LINE DIAGRAMS AND PUMP CONTROL SCHEMATICS FOR ENGINEERING APPROVAL.

FOR REVIEW ONLY

THIS DOCUMENT IS RELEASED FOR THE PURPOSE OF REVIEW ONLY, BY:

NAME: Frank T. Phelan

P.E. No.: 93874

NOT INTENDED FOR BIDDING OR CONSTRUCTION PURPOSES.

Jay Engineering Company, Inc.
P.O. Box 1220
Leander, Texas 78646-1220
Tel.: (512) 259-3882 Fax: (512) 259-8016
Texas Registered Engineering Firm F-4780

WRP, OFFSITE LIFT STA. & RECLAIMED WATER PUMP STA.
CRYSTAL FALLS WEST - SEC. 1

LIFT STATION ELECTRICAL SCHEMATIC & PUMP CONTROL SCHEMATIC

THE LOOKOUT GROUP

SCALE: AS NOTED | DWN: JJD | DESIGN: FAJ | DATE: OCT 2012
DWG. NO. AS NOTED | JOB NO. 157-045-20

no.	date	Revisions	appv.

Sheet
E.3.0

C:\Standards\acad-standards\J-sht.dwg September 13 2001 5:02pm By:Admin

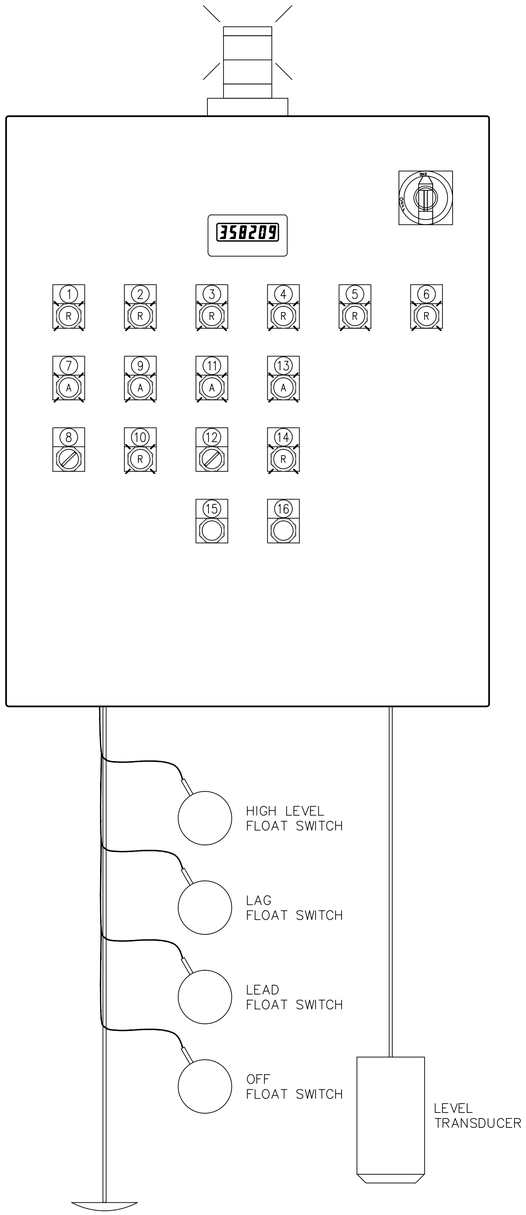

TYP. PCP PANEL LAYOUT

N.T.S.

DOOR TAG LAYOUT	
TAG #	TAG DESCRIPTION: LINE 1 / LINE 2 / LINE 3 / LINE 4
1	LOW LEVEL / ALARM FLOAT / ALARM IF OFF
2	OFF FLOAT
3	LEAD FLOAT
4	LAG LAG FLOAT
5	LAG FLOAT
6	HIGH / ALARM / FLOAT
7	PUMP #1 / SEAL FAILURE
8	PUMP #1 / HAND – OFF – AUTO
9	PUMP #1 / OVER TEMP
10	PUMP #1 / RUNNING
11	PUMP #2 / SEAL FAILURE
12	PUMP #2 / HAND – OFF – AUTO
13	PUMP #2 / OVER TEMP
14	PUMP #2 / RUNNING
15	MOTOR / OVER TEMP / RESET
16	ALARM / SILENCE

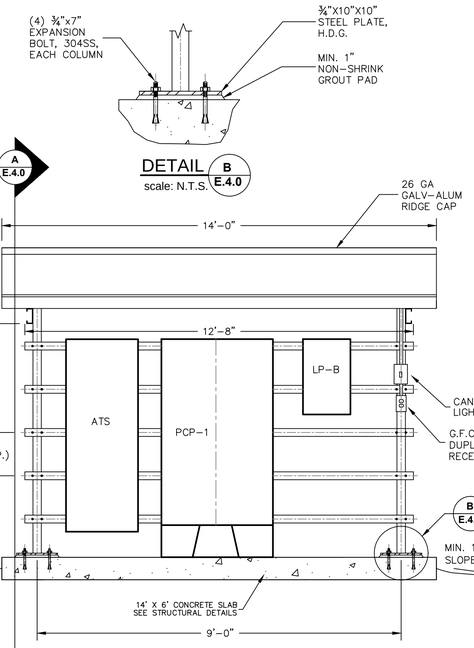

ELECTRICAL SHELTER

scale: N.T.S.

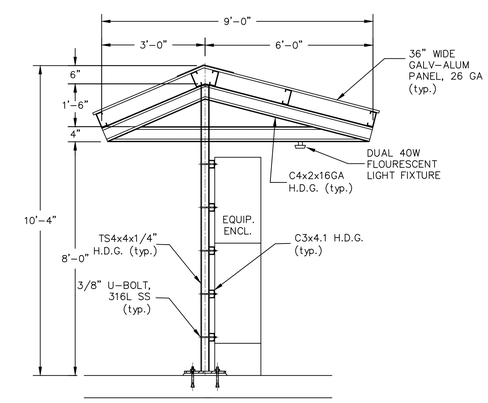

SHELTER SECTION A E.4.0

scale: N.T.S.

FOR REVIEW ONLY

THIS DOCUMENT IS RELEASED FOR THE PURPOSE OF REVIEW ONLY, BY:

NAME: Frank T. Phelan

P.E. No.: 93874

NOT INTENDED FOR BIDDING OR CONSTRUCTION PURPOSES.

Jay Engineering Company, Inc.
P.O. Box 1220
Leander, Texas 78646-1220
Tel: (512) 259-9082 Fax: (512) 259-9016
Texas Registered Engineering Firm F-4780

WRP, OFFSITE LIFT STA. & RECLAIMED WATER PUMP STA.
CRYSTAL FALLS WEST - SEC. 1

LIFT STATION PUMP CONTROL PANEL, SHELTER & DETAILS

THE LOOKOUT GROUP

SCALE: AS NOTED DWN: JJD DESIGN: FAJ DATE: OCT 2012

DWG. NO. AS NOTED JOB NO. 157-045-20

no.	date	Revisions	appv.

Sheet

E.4.0

C:\Projects-Lookout-Group\Crystal-Falls-West_Water-Recim-Plant_157-045-20\Const-Plans\1st-Set\CFW-Sec1_WRP_Sh-E4_LS-Pump-Cntrl-Sktr-Dets.dwg

ELECTRICAL LOAD CHART @ 480 V, 3ø, 3W SERVICE				
LOAD DESCRIPTION		CUMULATIVE LOAD CURRENT (AMPERES)		
		PHASE I	PHASE II	FINAL
MOTORS – FLA		249	462	673
25% LARGEST MOTOR		39	39	39
OTHERS		54	54	54
TOTAL:	AMPS	342	556	766
	KVA	270	430	600
SERVICE CONDUCTORS: 2–3" CONDUITS EACH WITH 3–400MCM(P), #2/0 (G)				

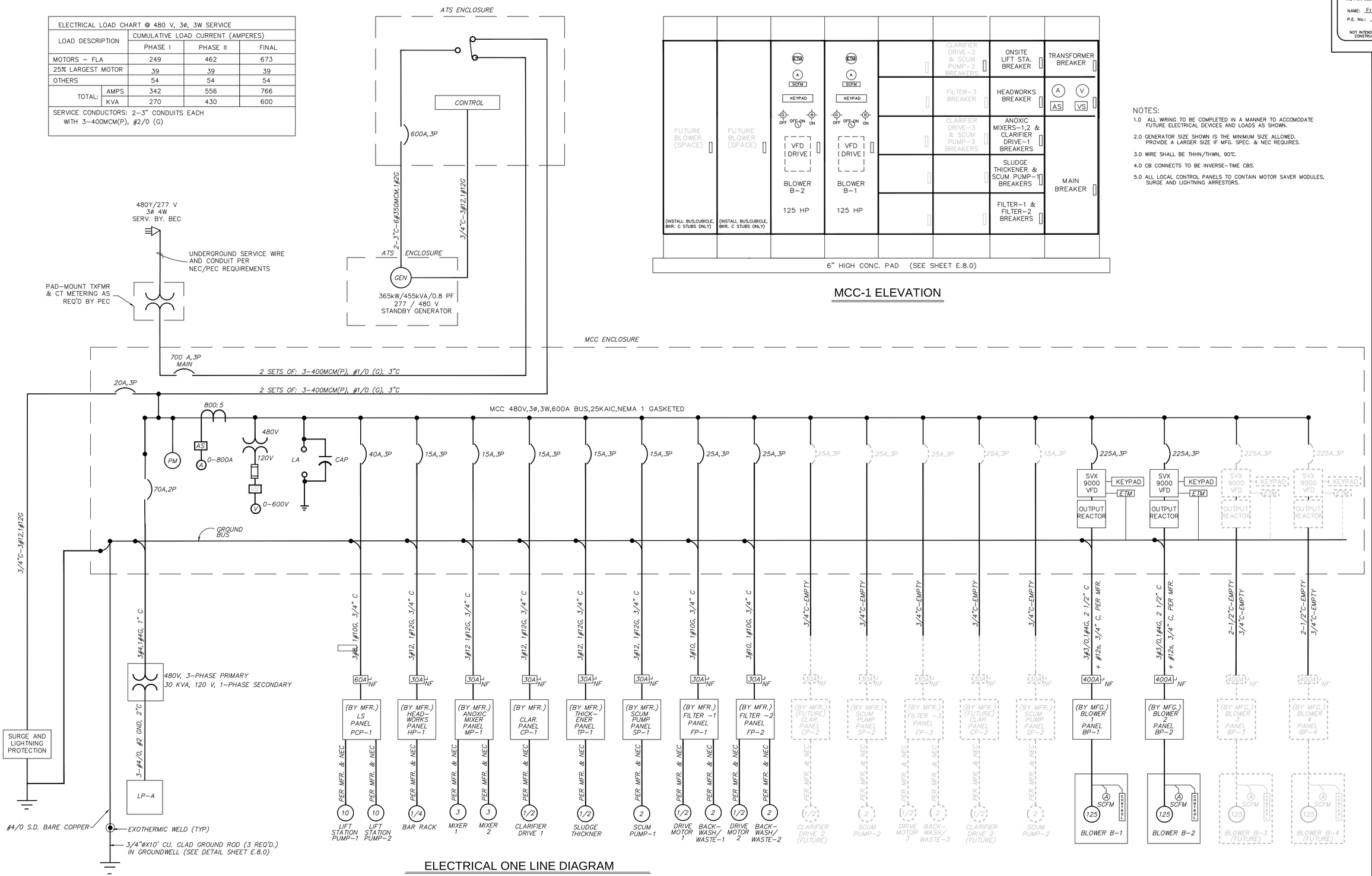

ELECTRICAL ONE LINE DIAGRAM

MCC-1 ELEVATION

NOTES:

1.0 ALL WIRING TO BE COMPLETED IN A MANNER TO ACCOMODATE FUTURE ELECTRICAL DEVICES AND LOADS AS SHOWN.

2.0 GENERATOR SIZE SHOWN IS THE MINIMUM SIZE ALLOWED. PROVIDE A LARGER SIZE IF MFG. SPEC. & NEC REQUIRES.

3.0 WIRE SHALL BE THHN/THWN, 90°C.

4.0 CB CONNECTS TO BE INVERSE–TIME CBS.

5.0 ALL LOCAL CONTROL PANELS TO CONTAIN MOTOR SAVER MODULES, SURGE AND LIGHTNING ARRESTORS.

FOR REVIEW ONLY

THIS DOCUMENT IS RELEASED FOR THE PURPOSE OF REVIEW ONLY. BY:

NAME: Frank T. Phelan

P.E. No.: 93874

NOT INTENDED FOR BIDDING OR CONSTRUCTION PURPOSES.

Jay Engineering Company, Inc.
P.O. Box 1220
Leander, Texas 78646-1220
Tel: (512) 259-9882 Fax: (512) 259-9016
Texas Registered Engineering Firm F-4780

CRYSTAL FALLS WEST - SEC. 1
WRP, OFFSITE LIFT STA. & RECLAIMED WATER PUMP STA.

MCC ELECTRICAL ONE-LINE DIAGRAM

THE LOOKOUT GROUP

SCALE: AS NOTED | DWN: JJD | DESIGN: FAJ | DATE: DEC 2012
DWG. NO. AS NOTED | JOB NO. 157-045-20

no.	date	Revisions	appv.

Sheet
E.5.0

C:\Projects-Lookout-Group\Crystal-Falls-West_Sec1_WRP_LiftSta_PmpSta_044-045-046\Const-Plans_WRP\1st-Set\CFW-Sec1_WRP_Sh-E.5.0_MCC-Elect-One-Line.dwg

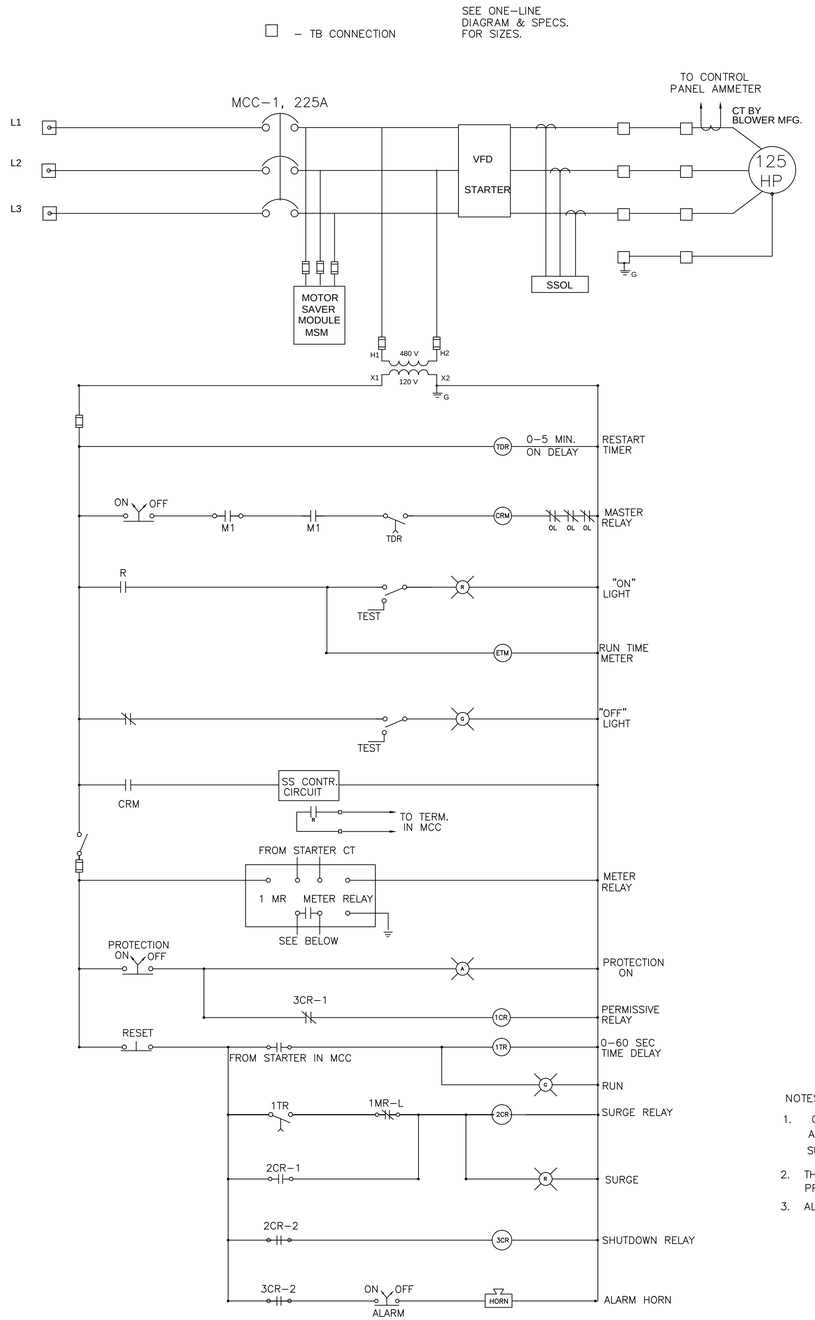

TYPICAL 125 HP BLOWER SCHEMATIC

NOTES:

1. CONTRACTOR TO VERIFY WIRING CONDITIONS AND FURNISH AND INSTALL ALL NECESSARY EQUIPMENT AND MATERIALS TO PROVIDE A COMPLETE WORKING SYSTEM. SUBMIT WIRING SCHEMATIC FOR APPVL.
2. THE SCHEMATICS SHOWN HEREON ARE INTENDED TO DEFINE THE CHARACTER AND SCOPE OF THE WORK. SUBMIT PROPOSED DEVICES AND WIRING DIAGRAMS FOR APPROVAL PRIOR TO WORK PERFORMANCE.
3. ALL WORK TO BE PERFORMED IN ACORDANCE WITH NEC LATEST EDITION AND TO THE DESIGN INTENT PER ENGINEER.

FOR REVIEW ONLY

THIS DOCUMENT IS RELEASED FOR THE PURPOSE OF REVIEW ONLY, BY:

NAME: Frank T. Phelan

P.E. No.: 93874

NOT INTENDED FOR BIDDING OR CONSTRUCTION PURPOSES.

Jay Engineering Company, Inc.
P.O. Box 1220
Leander, Texas 78646-1220
Tel: (512) 259-9082 Fax: (512) 259-9016
Texas Registered Engineering Firm F-4780

CRYSTAL FALLS WEST - SEC. 1
WRP, OFFSITE LIFT STA. & RECLAIMED WATER PUMP STA.

MCC ELECTRICAL CONTROL SCHEMATICS

THE LOOKOUT GROUP

SCALE: AS NOTED DWN: JJD DESIGN: FAJ DATE: DEC 2012
DWG. NO. AS NOTED JOB NO. 157-045-20

no.	date	Revisions	appv.

Sheet
E.6.0

C:\Projects-Lookout-Group\Crystal-Falls-West_Sec1_WRP_LiftSta_PmpSta_044-045-046\Const-Plans_WRP\1st-Set\CFW-Sec1_WRP_Sh-E.6.0_MCC-Elect-Ctrl-Schmtcs.dwg

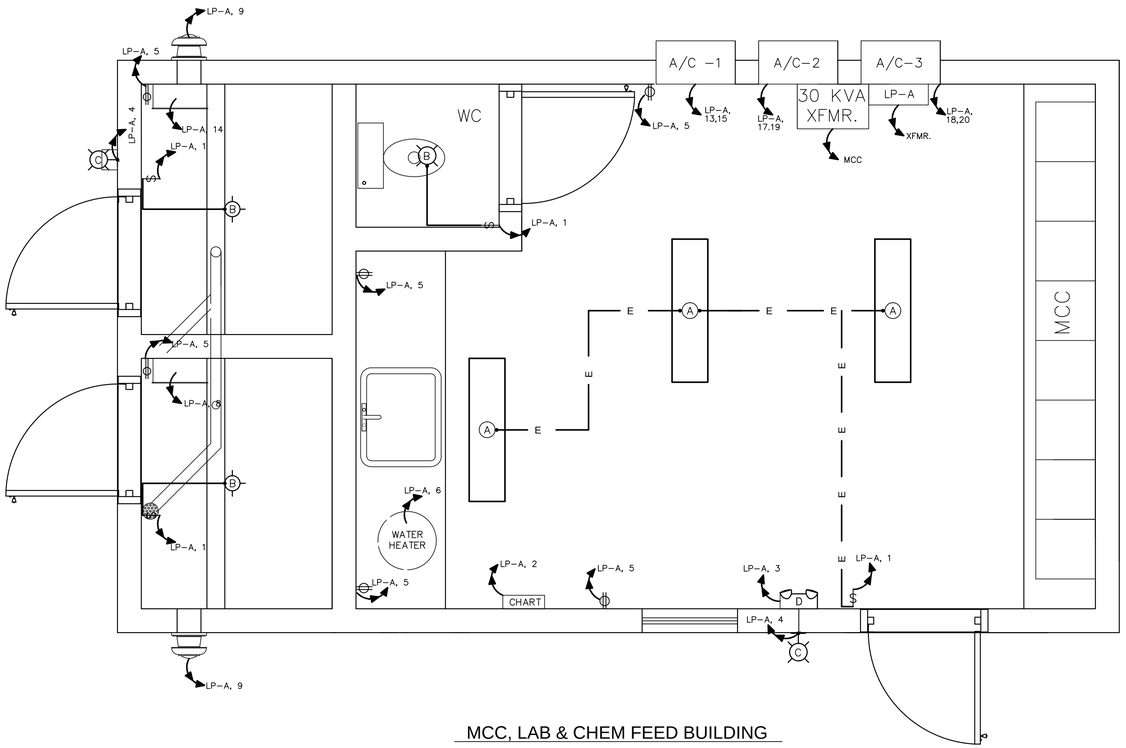

MCC, LAB & CHEM FEED BUILDING

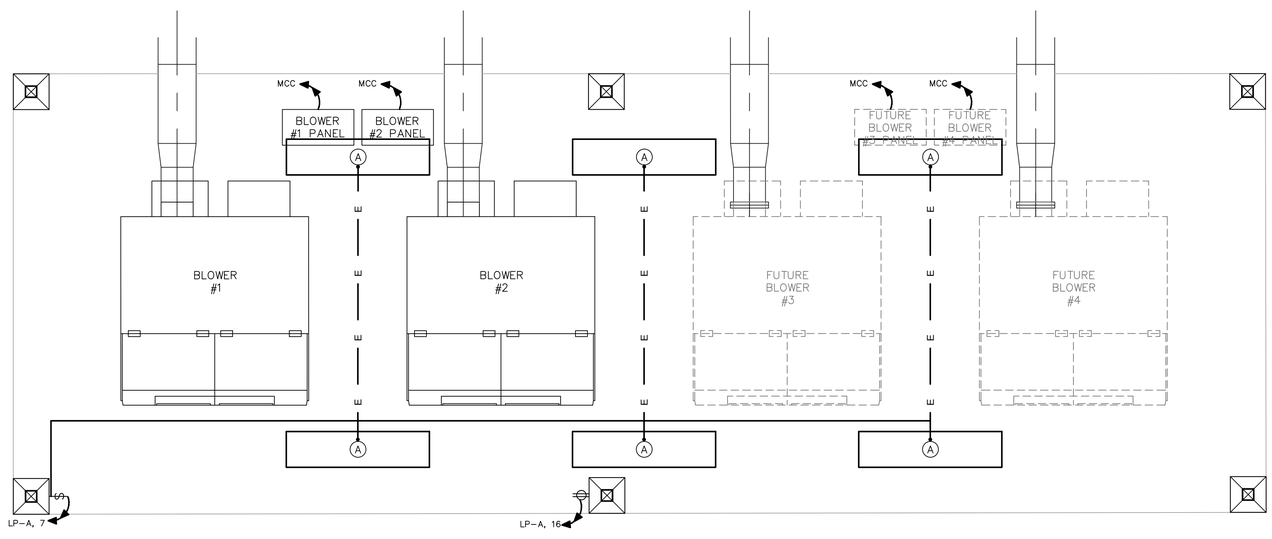

BLOWER SHELTER

PLAN VIEW

SCALE: 3/8"=1'-0"

CIRCUIT BREAKER PANEL LP-A SCHEDULE 10KAIC

VOLTS: 120/240 AMPS: 200 MCB: 200 PHASE/WIRING: 1ø

CIRCUIT BREAKER SIZE	CKT. NO.	LOAD DESCRIPTION			LOAD DESCRIPTION	CKT. NO.	CIRCUIT BREAKER SIZE
15A	1	MCC/LAB BLDG. LIGHTS			CHART RECORDER	2	15A
15A	3	EMERGENCY BUILDING LIGHTS			EXTERIOR BUILDING LIGHTS	4	15A
15A	5	MCC/LAB BUILDING GFCI DUPLEX RECEPTICLES			WATER HEATER	6	30A
15A	7	BLOWER SHELTER LIGHTS			HYPOCHLORITE FEED	8	15A
15A	9	CHEMICAL FEED ROOM FANS			STANTION MOUNT EXT. PLANT LIGHTS "F"	10	20A
15A	11	WAS TIMERS			POLE-MT EXT. LIGHTS "E"	12	20A
15A	13	AC -1			ALUM FEED	14	15A
15A	15	AC-1			BLOWER SHELTER GFCI DUPLEX RECEPTICLE	16	15A
15A	17	AC-2			AC-3	18	15A
15A	19	AC-2			AC-3	20	15A

LIGHTING SCHEDULE

(A) 120 V, 2-TUBE FLOURESCENT FIXTURE w/2-F40 DX/RS TUBES w/ALL WEATHER SLEEVES. USE ELECTRONIC F32T8 0'START BALLAST, IN DUST/WEATHERPROOF FIXTURE (CEILING MOUNT, NON-APPERATURED).

(B) 120V, 300W RATED, INCANDENSCENT CEILING MOUNTED EXPLOSION PROOF FIXTURE W/ LENS GUARD AND 100W LAMP, APPLETON MODEL #AC1575 OR EQUAL.

(C) 120 V, 70 W, HPS WALL MOUNT, WEATHERPROFF, LUMARK HPWL - 70120VNPF W/ PHOTOCELL OR EQUAL.

(D) 120 V, 12 W INCANDESCENT BATTERY BACKUP EMERGENCY LIGHTS w/ CHARGER. LITHONIA ELT36, OR APPROVED EQUAL.

NOTE: SEE ELECTRICAL SITE PLAN (SH. E.1.0) FOR AREA AND STANCHION LIGHTS.

NOTES:

1. CONTRACTOR TO VERIFY WIRING CONDITIONS AND FURNISH AND INSTALL ALL NECESSARY EQUIPMENT AND MATERIALS TO PROVIDE A COMPLETE WORKING SYSTEM. SUBMIT WIRING SCHEMATIC FOR APPVL.
2. THE SCHEMATICS SHOWN HEREON ARE INTENDED TO DEFINE THE CHARACTER AND SCOPE OF THE WORK. SUBMIT PROPOSED DEVICES AND WIRING DIAGRAMS FOR APPROVAL PRIOR TO WORK PERFORMANCE.
3. ALL WORK TO BE PERFORMED IN ACORDANCE WITH NEC LATEST EDITION AND TO THE DESIGN INTENT PER ENGINEER.
4. ALL CONDUIT SHALL BE ¾" MIN. ALL WIRES SHALL BE #12 MIN. UNLESS OTHERWISE NOTED.
5. EACH CONTROL CIRCUIT RUN SHALL HAVE SPARE PAIR OF CONTROL WIRES.
6. ALL RECEPTACLES TO BE G.F.C.I.

FOR REVIEW ONLY

THIS DOCUMENT IS RELEASED FOR THE PURPOSE OF REVIEW ONLY. BY:

NAME: Frank T. Phelan

P.E. No.: 93874

NOT INTENDED FOR BIDDING OR CONSTRUCTION PURPOSES.

Jay Engineering Company, Inc.
P.O. Box 1220
Leander, Texas 78646-1220
Tel: (512) 259-3882 Fax: (512) 259-8016
Texas Registered Engineering Firm F-4780

WRP, OFFSITE LIFT STA. & RECLAIMED WATER PUMP STA.
CRYSTAL FALLS WEST - SEC. 1

ELECTRICAL POWER & LIGHTING CIRCUITS

THE LOOKOUT GROUP

SCALE: AS NOTED DWN: JJO DESIGN: FAJ DATE: OCT 2012
DWG. NO. AS NOTED JOB NO. 157-045-20

no.	date	Revisions	appv.

Sheet
E.7.0

C:\Projects-Lookout-Group\Crystal-Falls-West_Sec1_WRP_LiftSta_PmpSta_044-045-046\Const-Plans_WRP\1st-Set\CFW-Sec1_WRP_Sh-E.7.0_Elect-Pwr-Lighting-Circts.dwg January 03 2013 10:08am By: jpad

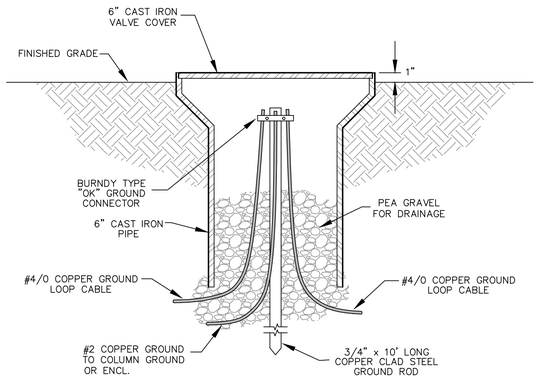

NOTE:

PROVIDE GROUND WELL FOR EACH GROUND ROD SHOWN ON THE DRAWINGS.

GROUNDWELL DETAIL

N.T.S.

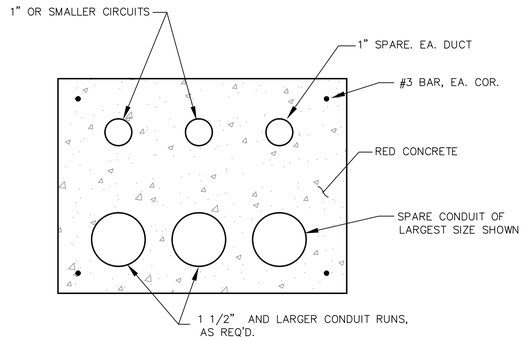

DUCT BANK DETAIL

N.T.S.

KOHLER 500REO2VB

475 KW, 623kVA DIESEL GENERATOR OR EQUAL

w/ WEATHERPROOF ENCLOSURE AND SOUND ATTENUATION

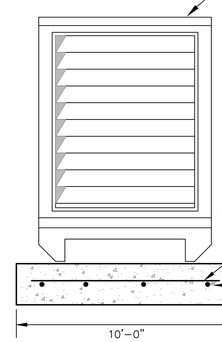

END VIEW

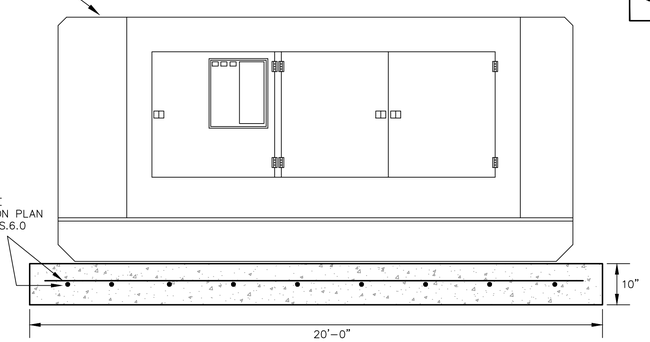

SIDE VIEW

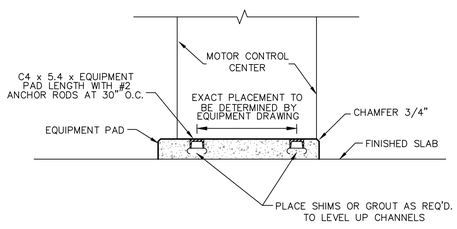

NOTES:

1. FRONT OF PAD IS TO EXTEND 3" BEYOND LARGEST UNIT OF EQUIPMENT.
2. SIDES OF PADS TO EXTEND 3" BEYOND EACH END.

SECTION - TYPICAL MCC FOUNDATION

scale: N.T.S.

A / E.8.0

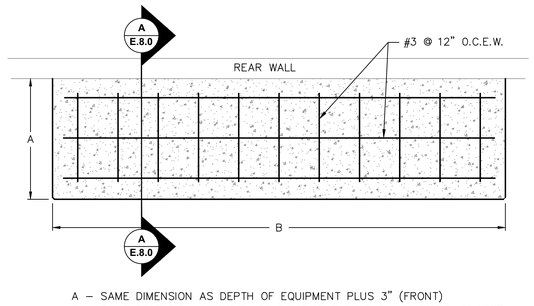

A – SAME DIMENSION AS DEPTH OF EQUIPMENT PLUS 3" (FRONT)

B – SAME DIMENSION AS WIDTH OF EQUIPMENT PLUS 6" (3" RIGHT, 3" LEFT)

Notes:

1. ALL FABRICATED METAL HOT DIPPED GALVANIZED (H.D.G.) UNLESS NOTED OTHERWISE.
2. ALL SELF–TAPPING SCREWS H.D.G.
3. ALL MISC. HARDWARE 316L STAINLESS STEEL (SS) UNLESS NOTED OTHERWISE.
4. SEAL WELD ALL JOINTS 3/16" CONTINUOUS FILLET UNLESS NOTED OTHERWISE.

TOP VIEW

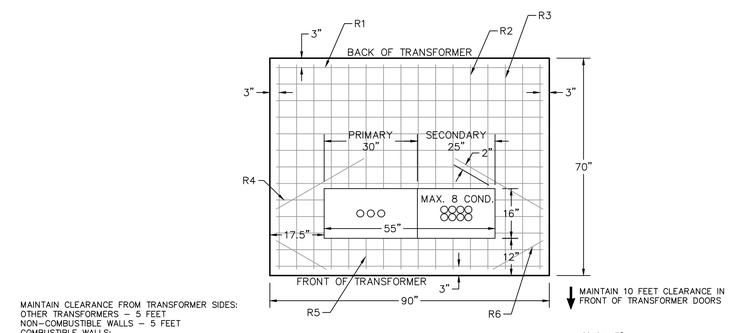

MAINTAIN CLEARANCE FROM TRANSFORMER SIDES:
OTHER TRANSFORMERS – 5 FEET
NON–COMBUSTIBLE WALLS – 5 FEET
COMBUSTIBLE WALLS:
0 TO 75kVA – 10 FT.
>75kVA – 20 FT.

FRONT VIEW

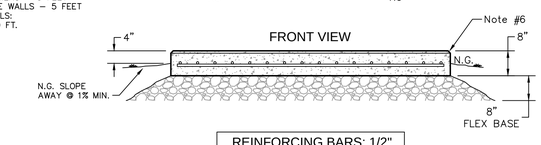

REINFORCING BARS; 1/2"					
R1	R2	R3	R4	R5	R6
9x86"	9x38"	6x66"	6x14"	9x8"	4x25"

SEE NOTE #3

NOTES:

1. TAMP GROUND UNDER PAD BEFORE SETTING TO PREVENT UNEVEN SETTLING.
2. CONCRETE: 3000 POUNDS MIN. PER SQUARE INCH; 4% TO 6% ENTRAINED AIR, 3/4" MAX. SIZE AGGREGATE.
3. REINFORCING STEEL: ATSM–A615 GARDE 60; EVENLY SPACE APPROXIMATELY 6" O.C. EACH WAY AND SECURLY TIED TOGETHER.
4. MINIMUM 2 INCH CONCRETE COVER OVER REINFORCING STEEL.
5. WOOD FLOAT LEVEL FINISH LEAVING NO DEPRESSIONS.
6. 3/4" CHAMFER ALL EDGES.
7. PRIMARY AND SECONDARY CONDUIT SHALL BE INSTALLED AND SEATED BEFORE POURING PAD.
8. CALL FOR INSPECTION OF PAD AFTER FRAMING BUT BEFORE POURING.

THREE PHASE TRANSFORMER PAD
45 - 750 kVA

NTS

FOR REVIEW ONLY

THIS DOCUMENT IS RELEASED FOR THE PURPOSE OF REVIEW ONLY. BY:

NAME: Frank T. Phelan

P.E. No.: 93874

NOT INTENDED FOR BIDDING OR CONSTRUCTION PURPOSES.

Jay Engineering Company, Inc.
P.O. Box 1220
Leander, Texas 78646-1220
Tel: (512) 259-3080 Fax: (512) 259-9016
Texas Registered Engineering Firm F-4780

WRP, OFFSITE LIFT STA. & RECLAIMED WATER PUMP STA.
CRYSTAL FALLS WEST - SEC. 1

ELECTRICAL & EMERGENCY GENERATOR DETAILS

THE LOOKOUT GROUP

SCALE: AS NOTED DWN: JJD DESIGN: FAJ DATE: OCT 2012

DWG. NO. AS NOTED JOB NO. 157-045-20

No.	date	Revisions	appv.

Sheet

E.8.0

C:\Projects-Lookout-Group\Crystal-Falls-West_Sec1_WRP_LiftSta_PmpSta_044-045-046\Const-Plans_WRP\1st-Set\CFW-Sec1_WRP_Sh-E.8.0_Energcy-Gen-Dets.dwg

CONDUIT RUN UNDERGROUND OR IN FLOOR SLAB

EXPOSED CONDUIT

1"C,3#10, 1#10G

CONDUIT & WIRE DESIGNATION E.G., 3 # 10 POWER
1 # 10 (G) IN 3/4" CONDUIT
(P) = POWER (C) = CONTROL
(G) = GROUND (A) = ALARM
(SH) = SPACE HEATER (I) = INSTRUMENTATION
(SP) = SPARE WIRES (EC) = EMPTY CONDUIT

HOMERUN TO PANEL CIRCUIT, MEMBERS INDICATED, SHORT HASH MARKS INDICATE PHASE WIRES, LONG HASH MARK INDICATES NEUTRAL WIRE, / MARK INDICATES EQUIPMENT GROUND WIRE. WHEN NOT MARKED, USE MINIMUM SIZE WIRE, CONDUIT.

GROUND WIRE. BARE COPPER UNDERGROUND

CONDUIT TURNING DOWN

CONDUIT TURNING UP

1 KEYNOTE SYMBOL AND KEYNOTE NUMBER

A WALL OR BRACKET MOUNTED LIGHT FIXTURE. LETTER DENOTES TYPE

A FLUORESCENT LIGHT FIXTURE. LETTER DENOTES TYPE

ABBREVIATIONS

AFF – ABOVE FINISHED FLOOR
EGC – ELECTRICAL GROUND CONDUCTOR
LA – LIGHTNING ARRESTOR
CAP – CAPACITOR
GFI – GROUND FAULT INTERRUPTER
WP – WEATHERPROOF
XFMR – TRANSFORMER
SW – SWITCH
TYP – TYPICAL
MH – MANHOLE
HH – HANDHOLE
GALV – GALVANIZED
S.D. BARE CU. – SOFT DRAWN BARE COPPER CABLE
ENCL – ENCLOSURE
REQ'D – REQUIRED
XFR SW – TRANSFER SWITCH
GEN – GENERATOR
EMER – EMERGENCY
XMTTR – TRANSMITTER
INST – INSTRUMENT
RTU – REMOTE TERMINAL UNIT
MTU – MASTER (BASE) TERMINAL UNIT

DIAGRAM SYMBOLS

FUSED SWITCH

CIRCUIT BREAKER

SIZE 1
FVNR
COMBINATION MOTOR STARTER
MOTOR STARTER: FVNR=FULL VOLTAGE NON–REVERSING
SSRV=SOLID STATE REDUCED VOLTAGE
RVNR=REDUCED VOLTAGE NON–REVERSING
FVR=FULL VOLTAGE REVERSING
MCP=MOTOR CIRCUIT PROTECTOR
SIZE=NEMA STARTER SIZE

480V
15KVA
120/240V
POWER TRANSFORMER. VOLTAGE AND KVA AS SHOWN

POTENTIAL TRANSFORMER

CURRENT TRANSFORMER

10 MOTOR. HP INDICATED

ETM ELAPSED TIME METER

A AMMETER

GROUND

GROUND ROD

NORMALLY OPEN SWITCH

V VOLTMETER

AS AMMETER SWITCH

VS VOLTMETER PHASE SELECTOR SWITCH

PMR POWER MONITOR RELAY

POWER RECEPTACLE–PIN & SLEEVE TYPE

H O A HAND–OFF–AUTOMATIC SWITCH

50 A 100 A
FUSE DISCONNECT SWITCH
–100 A SWITCH, 50 A FUSE

USER TELEPHONE JACK, TYPE RJ–11

MCP MOTOR CIRCUIT PROTECTOR

T THERMOSTAT

MM MOTOR METERING UNIT

DUPLEX OUTLET

M SERVICE METER

PRESSURE SWITCH NORMALLY OPEN CLOSES ON INCREASING PRESSURE

LIMIT SWITCH NORMALLY OPEN

MOTOR OPERATED VALVE GEARED LIMIT SWITCH

CIRCUIT BREAKER

NORMALLY OPEN RELAY CONTACT

NORMALLY CLOSED RELAY CONTACT

R PILOT LIGHT, COLOR INDICATED

TEST MOMENTARY CONTACT PUSHBUTTON, NORMALLY CLOSED

FUSE

TERMINAL BLOCK LOCATED IN MOTOR CONTROL CENTER

LEVEL SWITCH, NORMALLY OPEN

MOV MOTOR OPERATED VALVE

H O A
X00
0X0
00X
HAND–OFF–AUTOMATIC SWITCH

ALSO, HAND OFF AUTO
THREE POSITION MAINTAINED CONTACT SWITCH

ELECTRODE

TS TEMPERATURE SWITCH

FLASHER

SNI SYSTEM NETWORK INTERFACE
–CUSTOMER TELEPHONE J–BOX
BY SOUTHWESTERN BELL TELEPHONE CO.

SWITCH SPST, 20A, 125V

BEACON/HORN ACK.

CRL1 CONTROL RELAY, TAG ID "CRL1"

DUPLEX RECEPTACLE

UPS UNITERUPTIBLE POWER SUPPLY

MCP MOTOR CIRCUIT PROTECTOR

M SOLID–STATE MOTOR STARTER CONTACTOR

OVERLOAD

GROUND GRID

FOR REVIEW ONLY
THIS DOCUMENT IS RELEASED FOR THE PURPOSE OF REVIEW ONLY. BY:
NAME: Frank T. Phelan
P.E. No.: 93874
NOT INTENDED FOR BIDDING OR CONSTRUCTION PURPOSES.

Jay Engineering Company, Inc.
P.O. Box 1220
Leander, Texas 78646-1220
Tel: (512) 259-9088 Fax: (512) 259-9016
Texas Registered Engineering Firm F-4780

WRP, OFFSITE LIFT STA. & RECLAIMED WATER PUMP STA.
CRYSTAL FALLS WEST - SEC. 1

ELECTRICAL LEGEND AND KEY SHEET

THE LOOKOUT GROUP

SCALE: AS NOTED DWN: JJD DESIGN: FAJ DATE: OCT 2012
DWG. NO. AS NOTED JOB NO. 157-045-20

no.	date	Revisions	appv.

Sheet
E.9.0

C:\Projects-Lookout-Group\Crystal-Falls-West_Water-Recim-Plant_157-045-20\Const-Plans\1st-Set\CFW-Sec1_WRP_Sh-E9_Elect-Leg-Key-Sheet.dwg

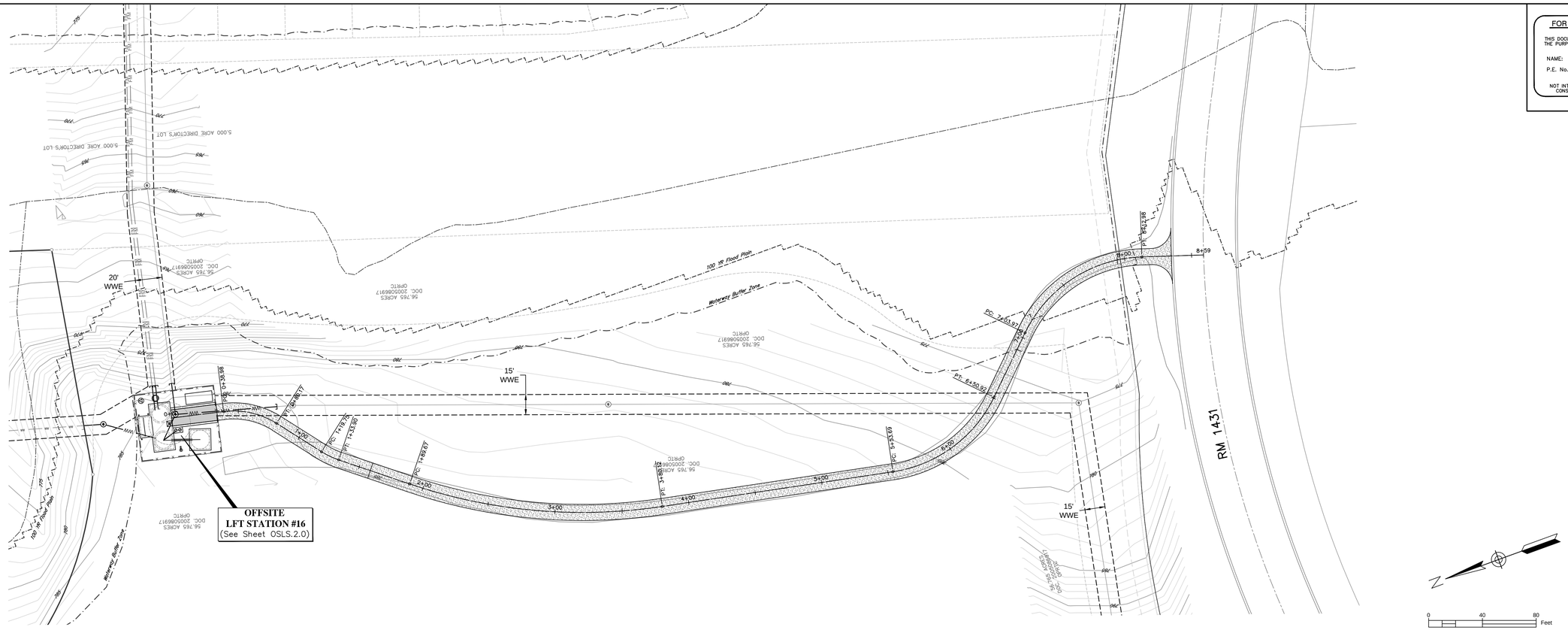

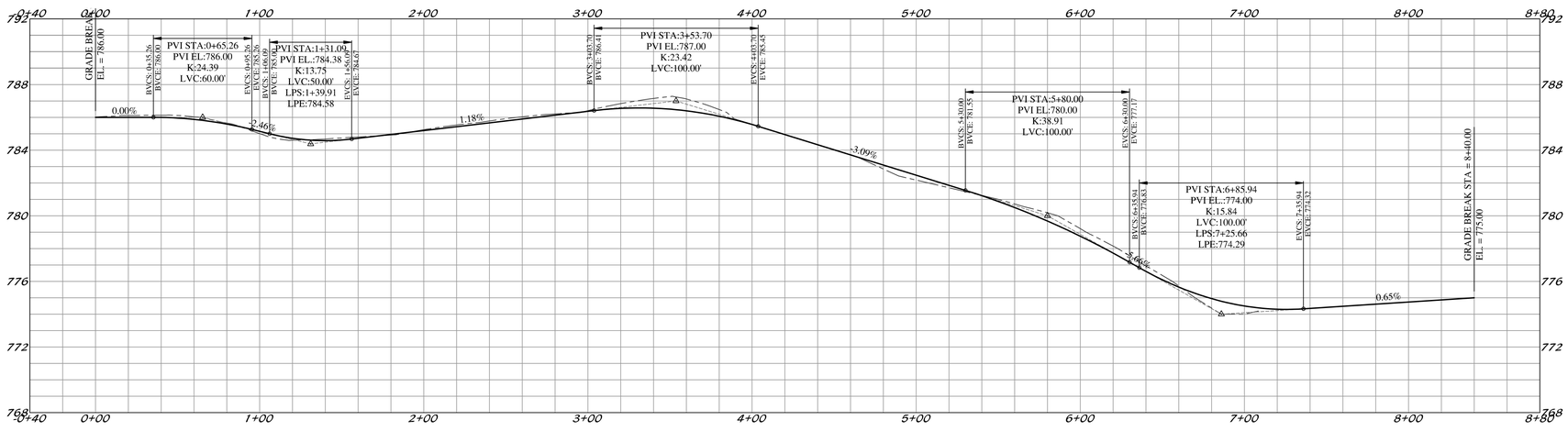

FOR REVIEW ONLY

THIS DOCUMENT IS RELEASED FOR THE PURPOSE OF REVIEW ONLY, BY:

NAME: Frank T. Phelan

P.E. No.: 93874

NOT INTENDED FOR BIDDING OR CONSTRUCTION PURPOSES.

Jay Engineering Company, Inc.
P.O. Box 1220
Lakeway, Texas 78646-1220
Tel: (512) 259-3882 Fax: (512) 259-9016
Texas Registered Engineering Firm F-4780

CRYSTAL FALLS WEST - SEC. 1
WRP, OFFSITE LIFT STA. & RECLAIMED WATER PUMP STA.

LIFT STA. #16 DRIVE, GRADING, E&S CONTROL PLAN

THE LOOKOUT GROUP

SCALE: AS NOTED | DWN: JJD | DESIGN: FAJ | DATE: DEC 2012

DWG. NO. AS NOTED | JOB NO. 157-045-20

No.	Date	Revisions	appr.

Sheet
OSLS 1.0

C:\Projects-Lookout-Group\Crystal-Falls-West_Sec1_WRP_LftSta_PmpSta_044-045-046\Const-Plans_LftSta\1st-Set\CFW-Sec1_Offsites_OSLS.1.0_Drive-Grd-E&S.dwg

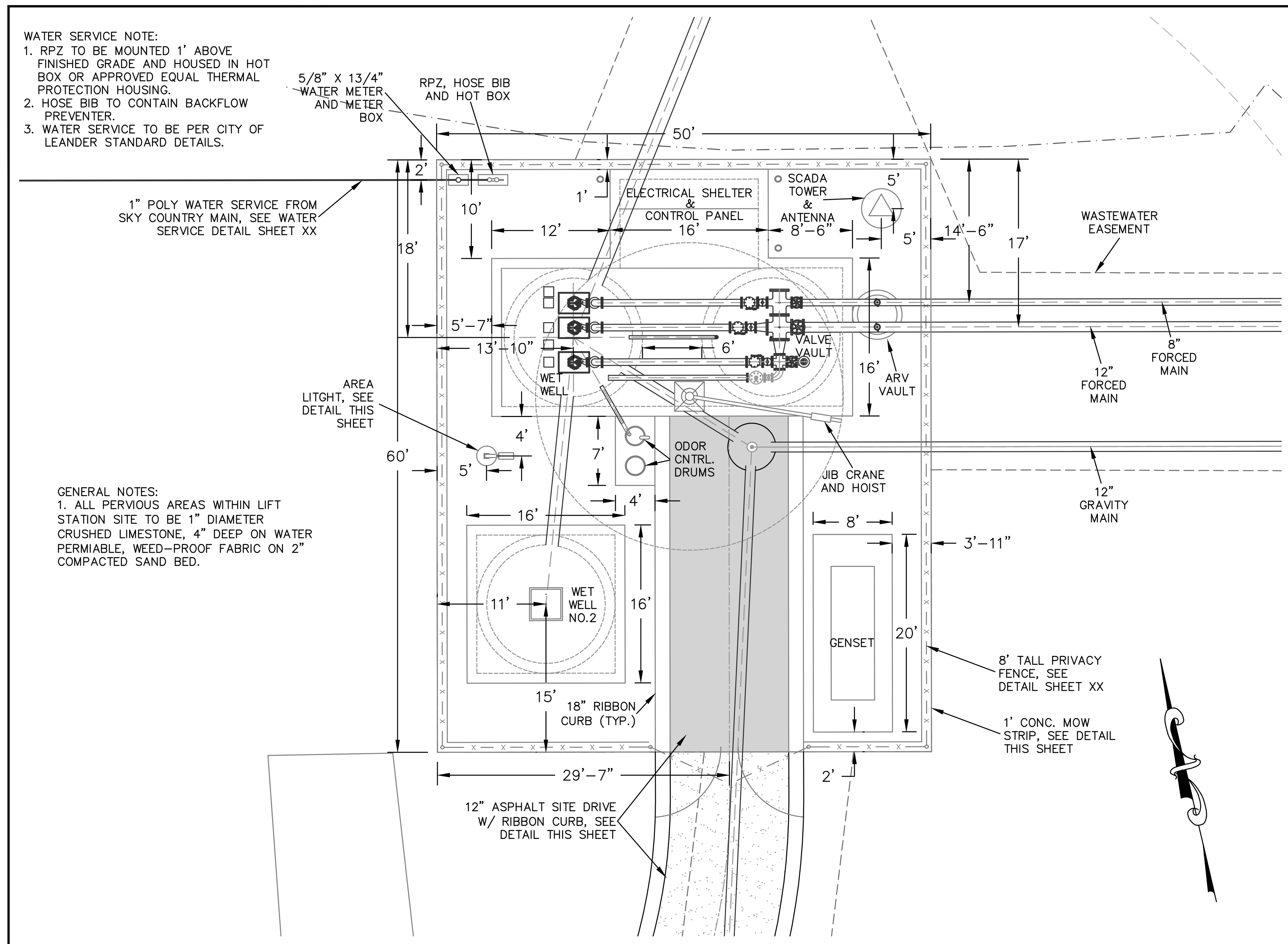

SITE PLAN VIEW
LIFT STATION

scale: 1"=10'

CONDUIT AND CABLE SCHEDULE

CONDUIT RUN	DESCRIPTION	ROUTING	SIZE & TYPE
PEC–XFMR	PEC ELECTRICAL SERVICE	PRIMARY CONDUITS TO PEC PAD XFMR.	UTILITY SPECIFICATIONS
XFMR–ED	SERVICE ENTRANCE	FROM PAD XFMR. TO EMERGENCY DISCONNECT	3 #1/0, 1 #6 GND., 2–1/2" C.
ED–ATS	MAIN SERVICE FEEDER	FROM EMERGENCY DISCONNECT TO ATS	3 #1/0, 1 #6 GND., 2–1/2" C.
ATS–GENSET	EMERGENCY POWER, GENSET CONTROL WIRING	AUTOMATIC TRANSFER SWITCH TO GENSET	3 #1/0, 1 #6 GND., 2–1/2" C. 4 #12, 1 #12 GND., 1" C.
ATS–PCP	EMERGENCY POWER, ATS CONTROL WIRING	PUMP CONTROL PANEL TO AUTOMATIC TRANSFER SWITCH	3 #1/0, 1 #6 GND., 2–1/2" C. 4 #12, 1 #12 GND., 1" C.
PCP–JB–P1	POWER, LEAK SENSOR AND OVERTEMP. WIRING	FROM PCP THROUGH JB TO P–1	CABLE: PUMP. MFR. SPECS. CONDUIT: MIN. (1) 2–1/2", (1)1"
PCP–JB–P2	POWER, LEAK SENSOR AND OVERTEMP. WIRING	FROM PCP THROUGH JB TO P–2	CABLE: PUMP. MFR. SPECS. CONDUIT: MIN. (1) 2–1/2", (1)1"
PCP–JB–P3	POWER, LEAK SENSOR AND OVERTEMP. WIRING	FROM PCP THROUGH JB TO P–3	CABLE: PUMP. MFR. SPECS. CONDUIT: MIN. (1) 2–1/2", (1)1"
PCP–FS	FLOAT SWITCH WIRING WIRING	FROM PCP THROUGH JB–1 TO WETWELL	MFR. SPECIFICTIONS, CONDUIT PER NEC
PCP–LT	LEVEL TRANSDUCER (ULTRASONIC)	FROM PCP THROUGH JB–1 TO WETWELL	MFR. SPECIFICTIONS, CONDUIT PER NEC
PCP–SCADA TWR.	ANTENNA CABLE	FROM PCP TO ANTENNA TOWER	CABLE: SCADA. MFR. SPECS. CONDUIT PER NEC
PCP–LP	LOAD PANEL	FROM PCP TO LOAD PANEL	2 #2, 1 #6 GND., 1" C
LP–AREA LIGHT	AREA LIGHT	FROM LP TO AREA LIGHT	2 #12, 1 #12 GND., 1" C
LP–DR/SL	GFCI DUPLEX RECEPTICLE AND SHELTER LIGHT	FROM LP TO DUPLEX RECEPTICLE AND SHELTER LIGHT	4 #12, 1 #12 GND., 1" C

GENERAL NOTES:

1. PROVIDE PERMANENT WATERPROOF TAGS FOR ALL WIRES, TAGS SHALL BE CONSISTENT THROUGHOUT THE ENTIRE LENGTH OF THE CONDUCTOR AND SHALL BE AS SHOWN ON THE ELECTRICAL WIRING OR SCHEMATIC DIAGRAMS AS APPLICABLE.
2. CONDUITS FROM J–BOX TO WETWELLS SHALL BE SCHEDULE 80 PVC. MINIMUM SIZE OF 2–1/2".
3. DUCT SEAL CABLE ENTRANCES FROM WETWELL INTO J–BOX AND FROM JUCTION BOX INTO PUMP CONTROL PANEL.
4. TRANSFORMER PAD TO BE PER CURRENT PEC SPECIFICTIONS.
5. ALL WORK TO BE PER NEC, LATEST EDITION.
6. ALL LIFT STATION EQUIPMENT AND CONTROLS TO BE INTRINSICALLY SAFE.

GENSET MONITOR CIRCUITS
1. GENSET STATUS
2. GENSET TROUBLE

ATS MONITOR CIRCUITS
1. ATS STATUS
2. ATS TROUBLE
3. GENSET STATUS (PASS THROUGH)
4. GENSET TROUBLE (PASS THROUGH)

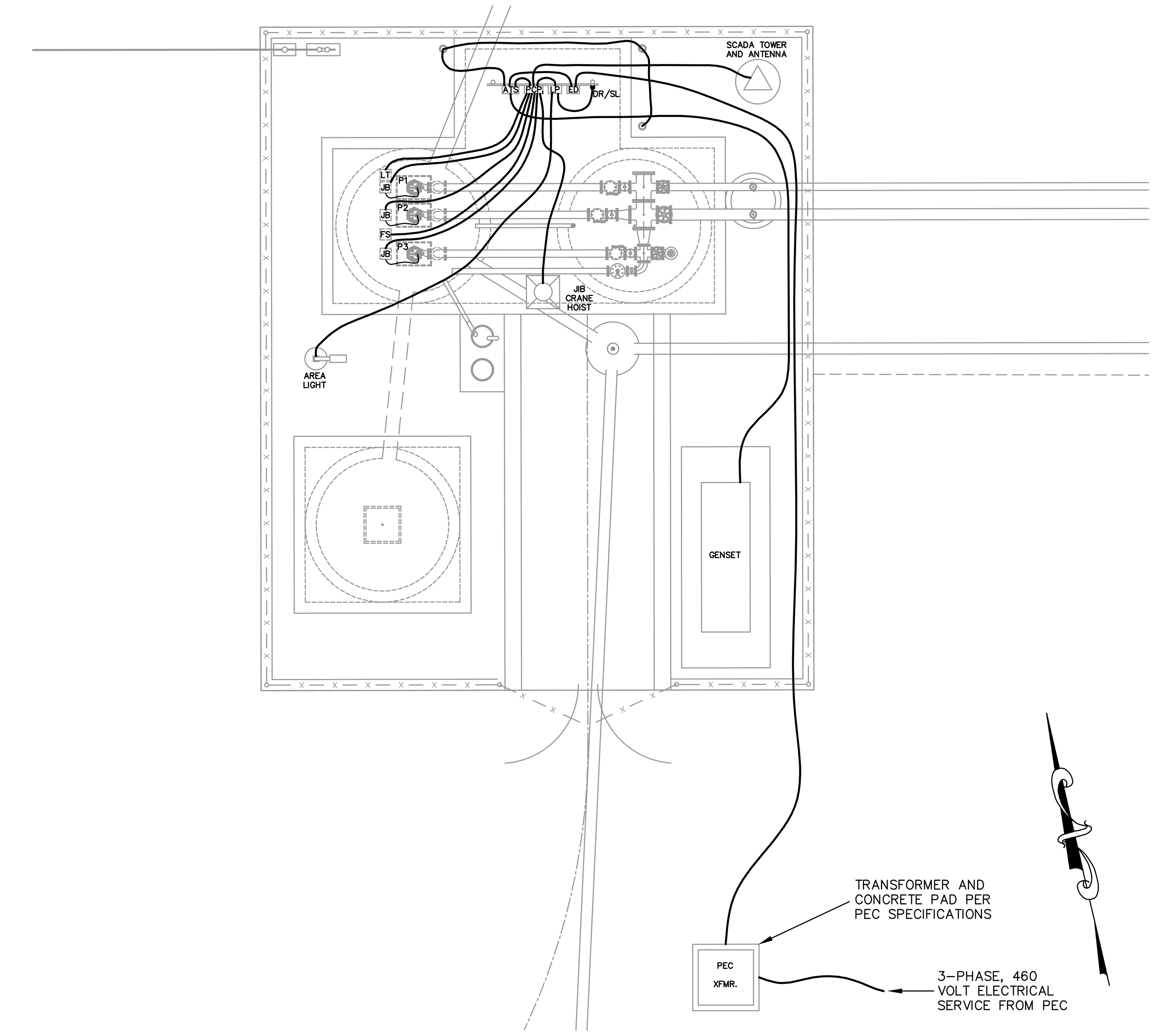

FOR REVIEW ONLY

THIS DOCUMENT IS RELEASED FOR THE PURPOSE OF REVIEW ONLY, BY:

NAME: Frank T. Phelan

P.E. No.: 93874

NOT INTENDED FOR BIDDING OR CONSTRUCTION PURPOSES.

ELECTRICAL SITE PLAN
LIFT STATION

scale: 1"=10'

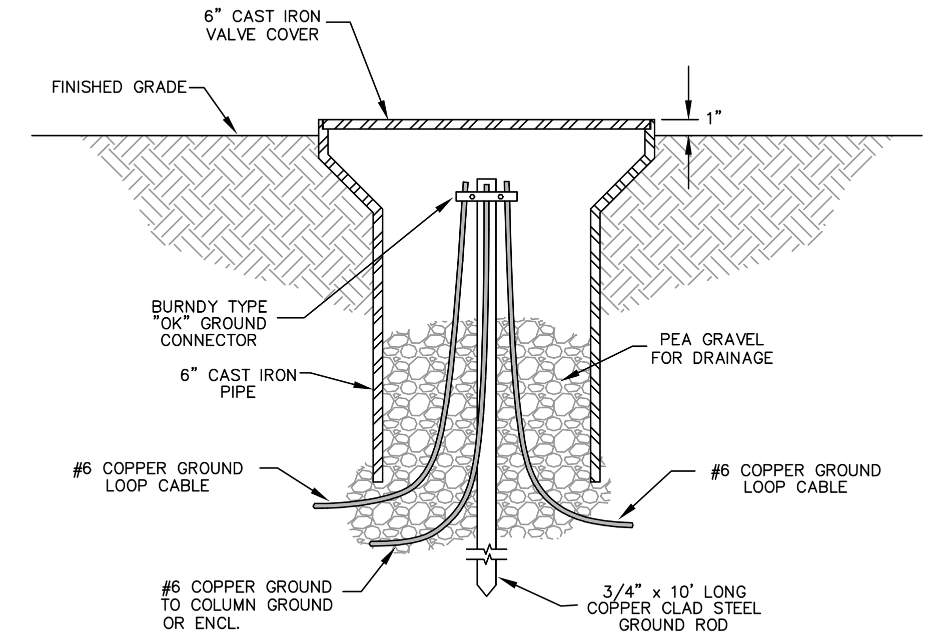

NOTE:
1. PROVIDE GROUND WELL FOR EACH LOCATION SHOWN ON THE DRAWINGS.
2. GROUND WELLS TO BE LOCATED APPROXIMATELY 1' FROM SLABS AS SHOWN ON THE DRAWINGS.

GROUNDWELL DETAIL

N.T.S.

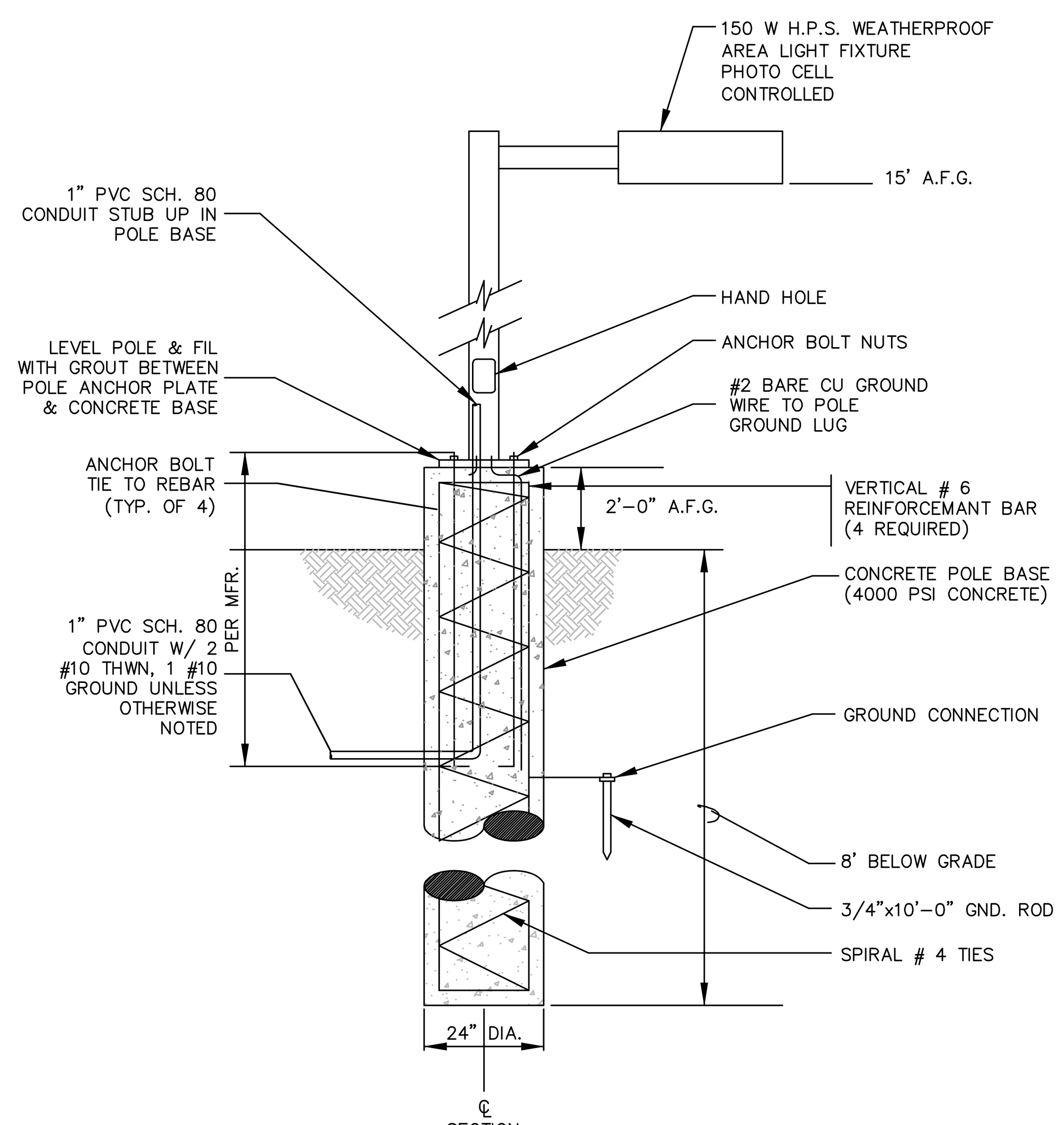

AREA LIGHTING POLE ELEVATION

N.T.S.

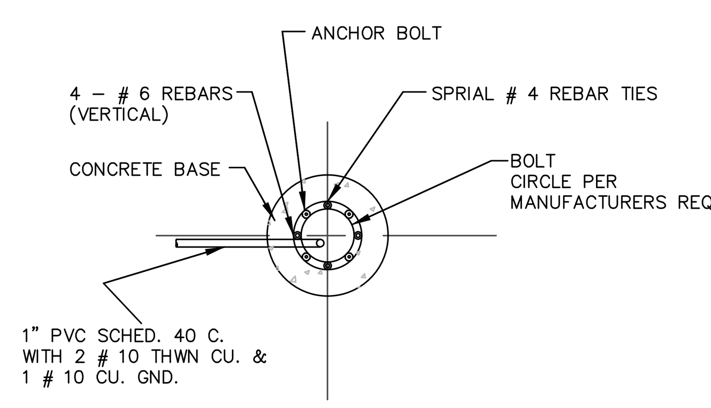

AREA LIGHTING POLE FOUNDATION PLAN

N.T.S.

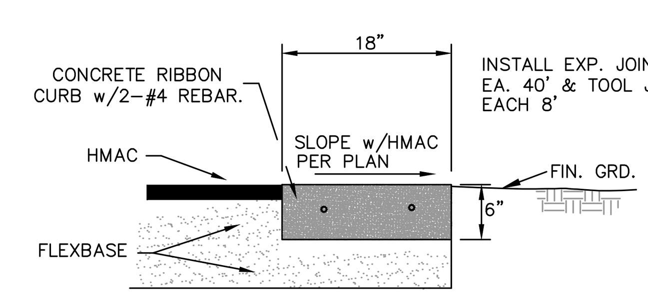

RIBBON CURB

N.T.S.

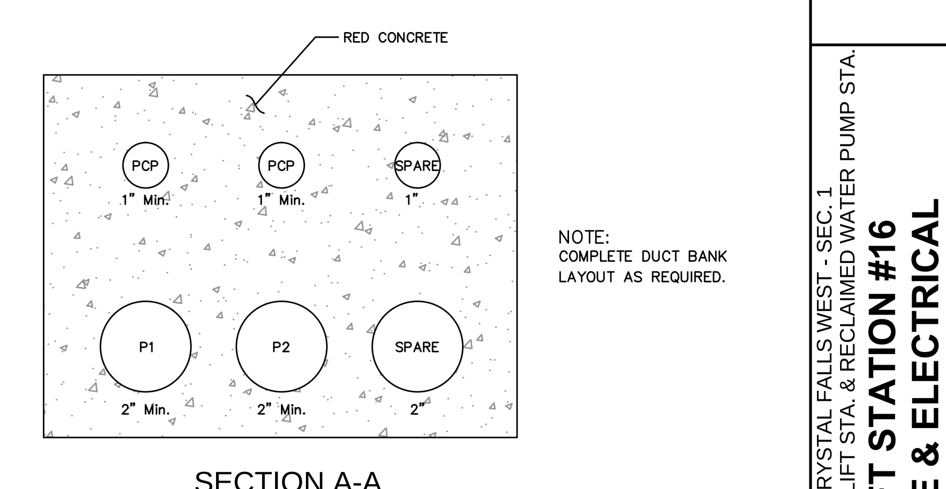

NOTE:
COMPLETE DUCT BANK LAYOUT AS REQUIRED.

SECTION A-A

N.T.S.

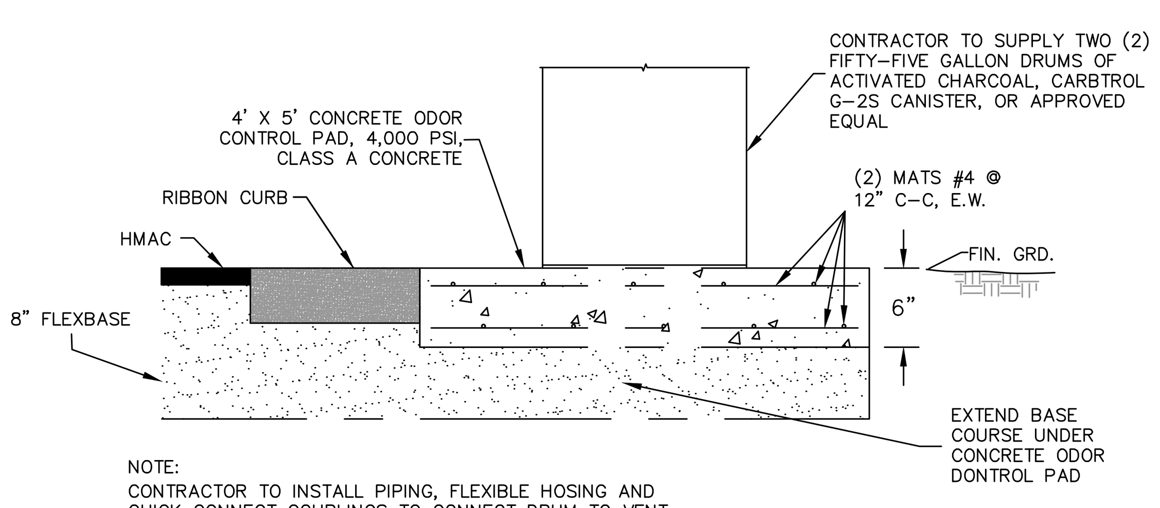

NOTE:
CONTRACTOR TO INSTALL PIPING, FLEXIBLE HOSING AND QUICK CONNECT COUPLINGS TO CONNECT DRUM TO VENT LINE FROM WET WELL AND FOR VENTING OF DRUM, SUBMIT INFORMATION ON MATERIALS FOR REVIEW.

ODOR CONTROL

N.T.S.

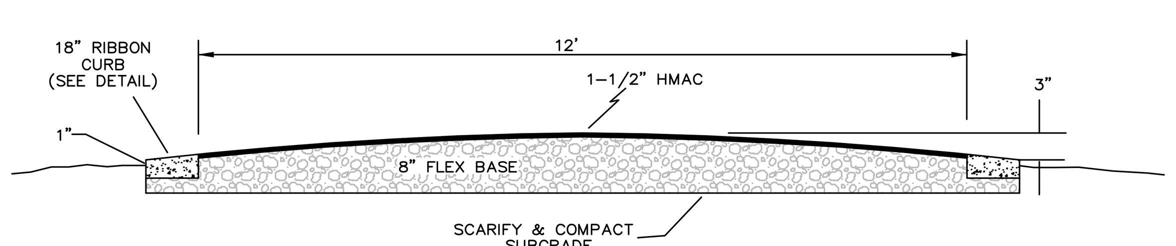

SECTION - L.S. SITE DRIVE

N.T.S.

KOHLER MODEL 180REOZJG
180 KW DIESEL GENERATOR OR EQUAL
w/ WEATHERPROOF ENCLOSURE AND SOUND ATTENUATION

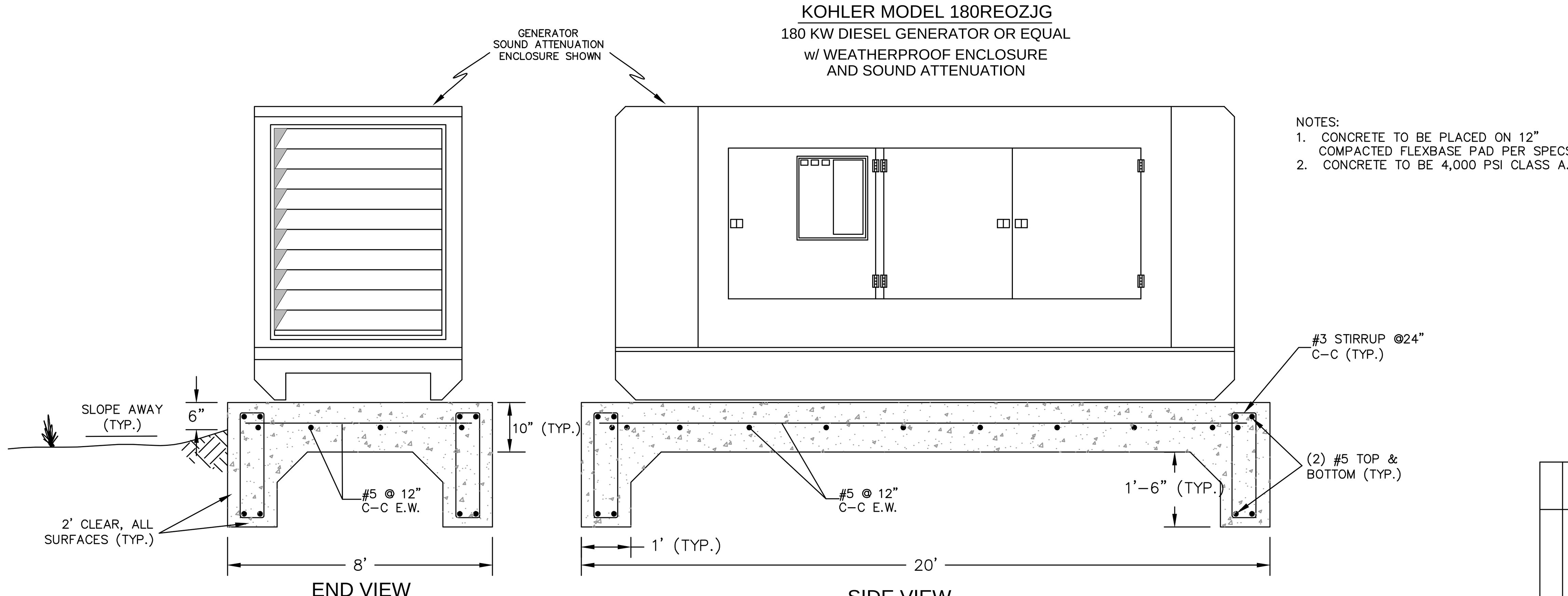

NOTES:
1. CONCRETE TO BE PLACED ON 12" COMPACTED FLEXBASE PAD PER SPECS
2. CONCRETE TO BE 4,000 PSI CLASS A.

GENSET FOUNDATION PLAN

N.T.S.

CRYSTAL FALLS WEST - SEC. 1
WRP, OFFSITE LIFT STA. & RECLAIMED WATER PUMP STA.
LIFT STATION #16
SITE & ELECTRICAL PLANS AND DETAILS

THE LOOKOUT GROUP

SCALE: AS NOTED DWN: FTP DESIGN: FTP DATE: NOV 2012
DWG. NO. AS NOTED JOB NO. 157–044–20

no.	date	Revisions	appv.

Sheet
OSLS 2.0

C:\Projects–Lookout–Group\Crystal–Falls–West_Sec1_WRP_LftSta_PmpSta_044–045–046\Const–Plans_LftSta\1st–Set\CFW–Sec1_Offsites_OSLS.2.0_Lft–Sta–Elec–Plan.dwg

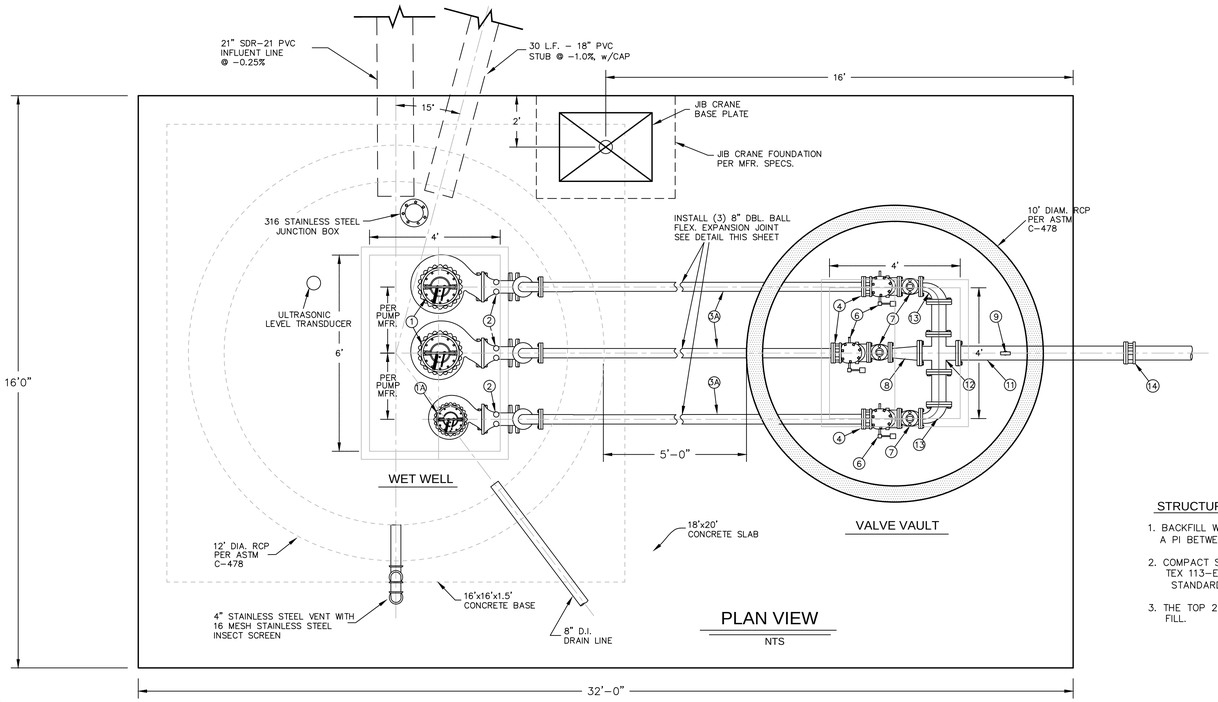

PLAN VIEW

NTS

GENERAL NOTES:

1. MANUFACTURER OF TREATMENT EQUIPMENT SHALL BE RESPOSIBLE FOR ADEQUATE SIZING OF GATES, PIPES, WEIRS AND OPENINGS TO PASS FLOWS REQUIRED AND AS SHOWN IN HYDRAULIC PROFILE OR SPECIFICATIONS.

2. ALL HOSE BIBS SHALL BE ⅝" UNLESS OTHERWISE STATED. VACUUM BREAKERS TO BE INSTALLED ON ALL HOSE BIBS.

3. ALL EXPOSED NON-POTABLE WATER PIPING SHALL BE COLOR-CODED AND SIGNED PER TCEQ RULES.

4. WALKWAYS AND STAIRS TO HAVE KICK PLATES PER OSHA REQUIREMENTS (TYP. ALL WALKWAYS AND STAIRS)

STRUCTURAL NOTES

1. BACKFILL WET WELL WITH APPROVED GRANULAR MATERIAL HAVING A PI BETWEEN 4 &15. COMPACT IN 12" LIFTS.

2. COMPACT STRUCTURAL FILL IN 8" LIFTS TO 95% MAX. DENSITY PER TEX 113-E. MOISTURE CONTENT WITHIN 2% OPTIMUM, PER STANDARD PROCTOR(ASTM D 698).

3. THE TOP 24" OF FILL TO BE LOW PERMEABILITY, LOW PLASTICITY FILL.

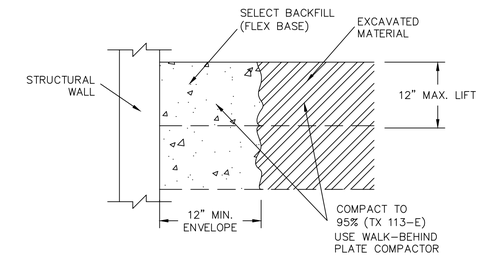

BACKFILL DETAIL

(ALL WET WELLS, TYP.)

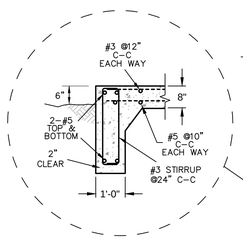

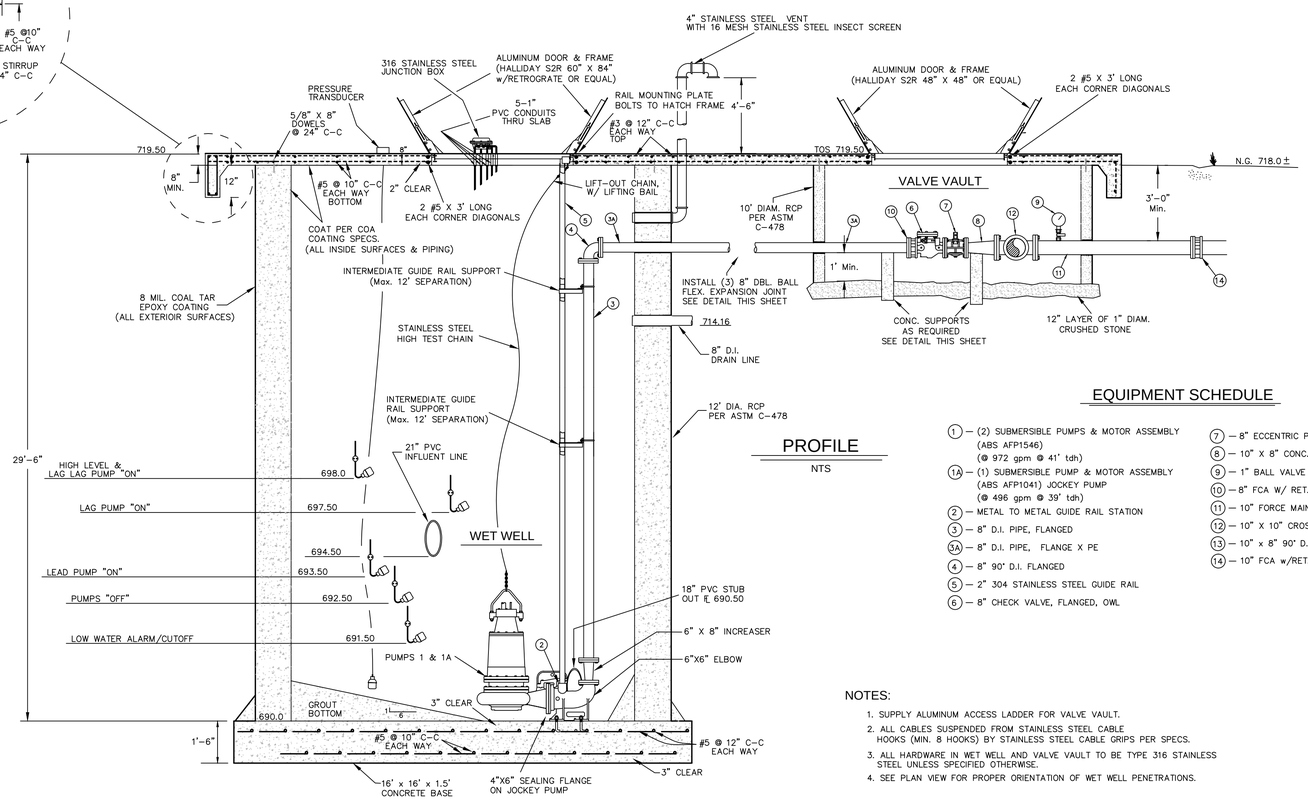

PROFILE

NTS

EQUIPMENT SCHEDULE

1. (2) SUBMERSIBLE PUMPS & MOTOR ASSEMBLY (ABS AFP1546) (@ 972 gpm @ 41' tdh)
1A. (1) SUBMERSIBLE PUMP & MOTOR ASSEMBLY (ABS AFP1041) JOCKEY PUMP (@ 496 gpm @ 39' tdh)
2. METAL TO METAL GUIDE RAIL STATION
3. 8" D.I. PIPE, FLANGED
3A. 8" D.I. PIPE, FLANGE X PE
4. 8" 90° D.I. FLANGED
5. 2" 304 STAINLESS STEEL GUIDE RAIL
6. 8" CHECK VALVE, FLANGED, OWL
7. 8" ECCENTRIC PLUG VALVE, FLANGED
8. 10" X 8" CONC. RED., FLANGE X FLANGE
9. 1" BALL VALVE w/PRESSURE GAUGE
10. 8" FCA W/ RET. GLANDS
11. 10" FORCE MAIN, D.I., FLANGED
12. 10" X 10" CROSS, D.I., FLANGED
13. 10" x 8" 90° D.I. FLANGED
14. 10" FCA w/RET. GLANDS

NOTES:

1. SUPPLY ALUMINUM ACCESS LADDER FOR VALVE VAULT.
2. ALL CABLES SUSPENDED FROM STAINLESS STEEL CABLE HOOKS (MIN. 8 HOOKS) BY STAINLESS STEEL CABLE GRIPS PER SPECS.
3. ALL HARDWARE IN WET WELL AND VALVE VAULT TO BE TYPE 316 STAINLESS STEEL UNLESS SPECIFIED OTHERWISE.
4. SEE PLAN VIEW FOR PROPER ORIENTATION OF WET WELL PENETRATIONS.

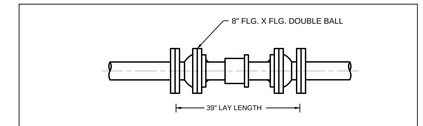

FLEX. EXPANSION JOINT DETAIL

NTS

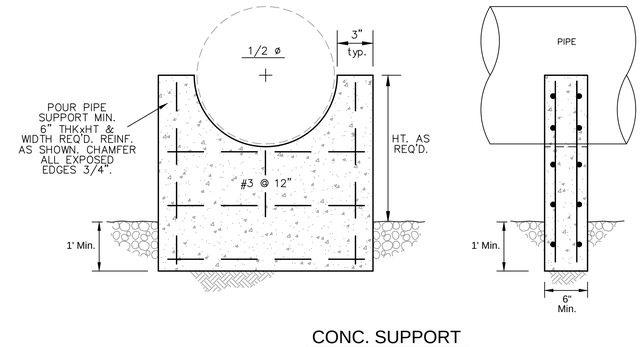

CONC. SUPPORT

FOR REVIEW ONLY

THIS DOCUMENT IS RELEASED FOR THE PURPOSE OF REVIEW ONLY, BY:

NAME: Frank T. Phelan

P.E. No.: 93874

NOT INTENDED FOR BIDDING OR CONSTRUCTION PURPOSES.

Jay Engineering Company, Inc.
P.O. Box 1220
Leander, Texas 78646-1220
Tel: (512) 259-3882 Fax: (512) 259-9016
Texas Registered Engineering Firm F-4780

CRYSTAL FALLS WEST - SEC. 1
WRP, OFFSITE LIFT STA. & RECLAIMED WATER PUMP STA.

LIFT STATION #16
PLAN & PROFILE

THE LOOKOUT GROUP

SCALE: AS NOTED	DWN: JJD	DESIGN: FAJ	DATE: DEC 2012
DWG. NO. AS NOTED		JOB NO. 157-044-20	

no.	date	Revisions	appv.

Sheet
OSLS 3.0

C:\Projects-Lookout-Group\Crystal-Falls-West_Sec1_WRP_LftSta_PmpSta_044-045-046\Const-Plans_LftSta\1st-Set\CFW-Sec1_Offsites_OSLS3.0_Lft-Sta-Plan-Profile.dwg

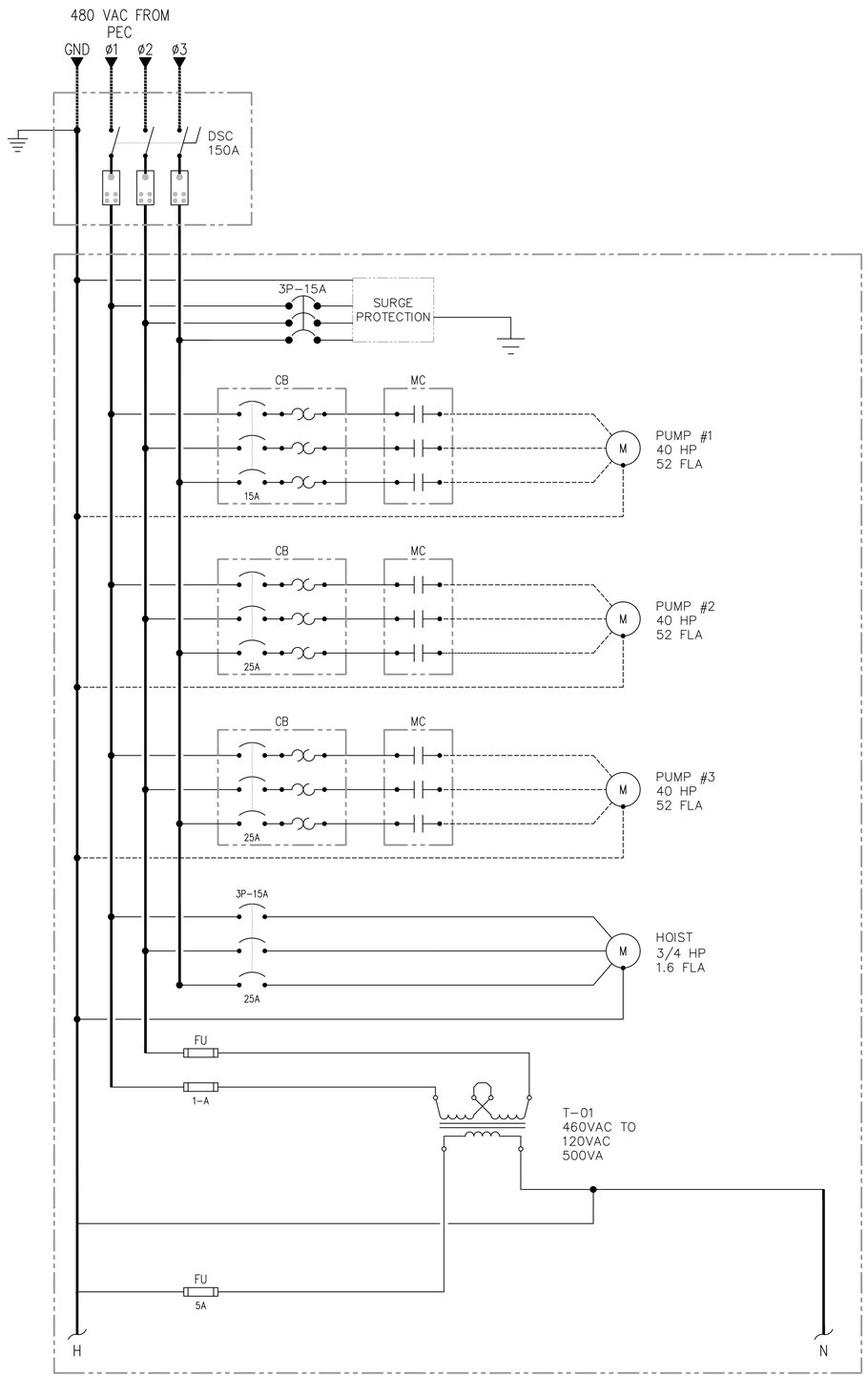

CIRCUIT BREAKER PANEL LP-B SCHEDULE 10K AIC

VOLTS: 120 AMPS: 100 MCB: 80 PHASE/WIRING: 1ø

CIRCUIT BREAKER SIZE	CKT. NO.	LOAD DESCRIPTION	PHASE A	PHASE B	LOAD DESCRIPTION	CKT. NO.	CIRCUIT BREAKER SIZE
15A	1	PUMP CONTROLS			SCADA	2	15A
15A	3	PANEL LIGHT			AREA LIGHT	4	15A
15A	5	SHELTER LIGHT			GFCI RECEPTACLE	6	20A
15A	7	SPARE			SPARE	8	15A
15A	9	SPARE			SPARE	10	15A
15A	11	SPARE			SPARE	12	15A
	13					14	

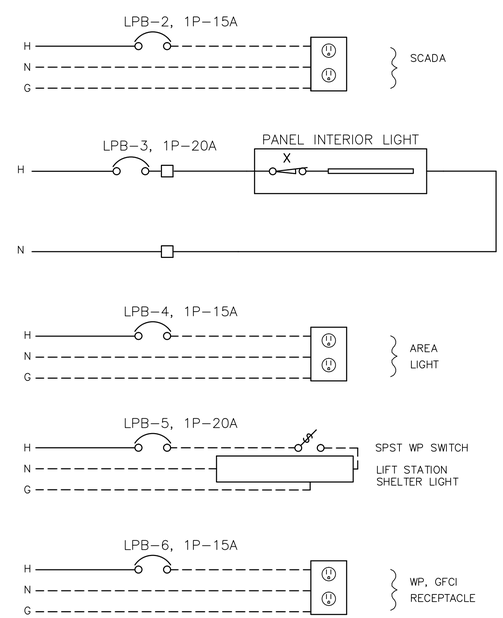

KEYNOTES:

1. OVERLOAD INTERNAL TO STARTER.
2. CURRENT SENSOR INTERNAL TO STARTER.
3. MINIMIZE LENGTH OF SURGE PROTECTOR LEADS AVOID BENDS. USE LOW IMPEDANCE WIRE. FOLLOW MANUFACTURER'S RECOMMENDATIONS.

☐ – TB CONNECTION

SEE ONE–LINE DIAGRAM FOR WIRE SIZE.

SUBMIT ELECTRICAL POWER DIAGRAM FOR ENGINEERING APPROVAL

FOR REVIEW ONLY

THIS DOCUMENT IS RELEASED FOR THE PURPOSE OF REVIEW ONLY. BY:

NAME: Frank T. Phelan

P.E. No.: 93874

NOT INTENDED FOR BIDDING OR CONSTRUCTION PURPOSES.

Jay Engineering Company, Inc.
P.O. Box 1220
Leander, Texas 78646-1220
Tel: (512) 259-9088 Fax: (512) 259-9016
Texas Registered Engineering Firm F–4780

WRP, OFFSITE LIFT STA. & RECLAIMED WATER PUMP STA.
CRYSTAL FALLS WEST – SEC. 1

LIFT STATION #16 ELECTRICAL POWER DIAGRAM

THE LOOKOUT GROUP

SCALE: AS NOTED DWN: JJD DESIGN: FAJ DATE: DEC 2012
DWG. NO. AS NOTED JOB NO. 157–045–20

No.	Date	Revisions	Appv.

Sheet
OSLS 4.0

C:\Projects–Lookout–Group\Crystal–Falls–West_Sec1_WRP_LftSta_PmpSta_044–045–046\Const–Plans_LftSta\1st–Set\CFW–Sec1_Offsites_OSLS 4.0_Lift–Sta–Elec–Pwr–Dgrm.dwg

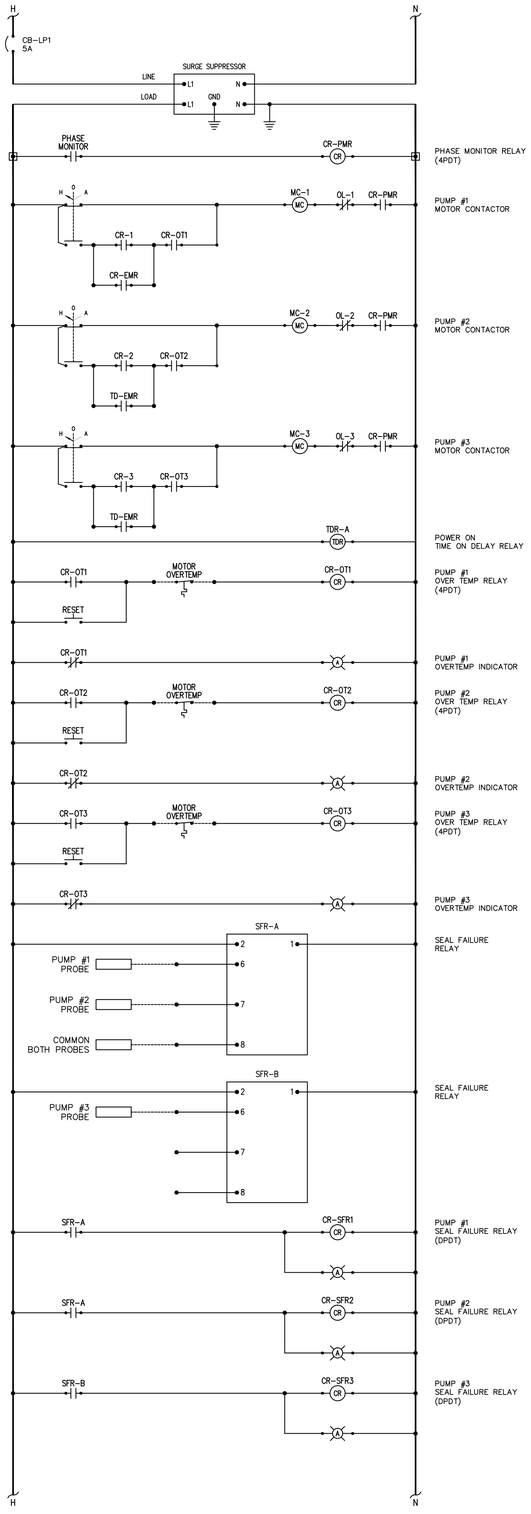

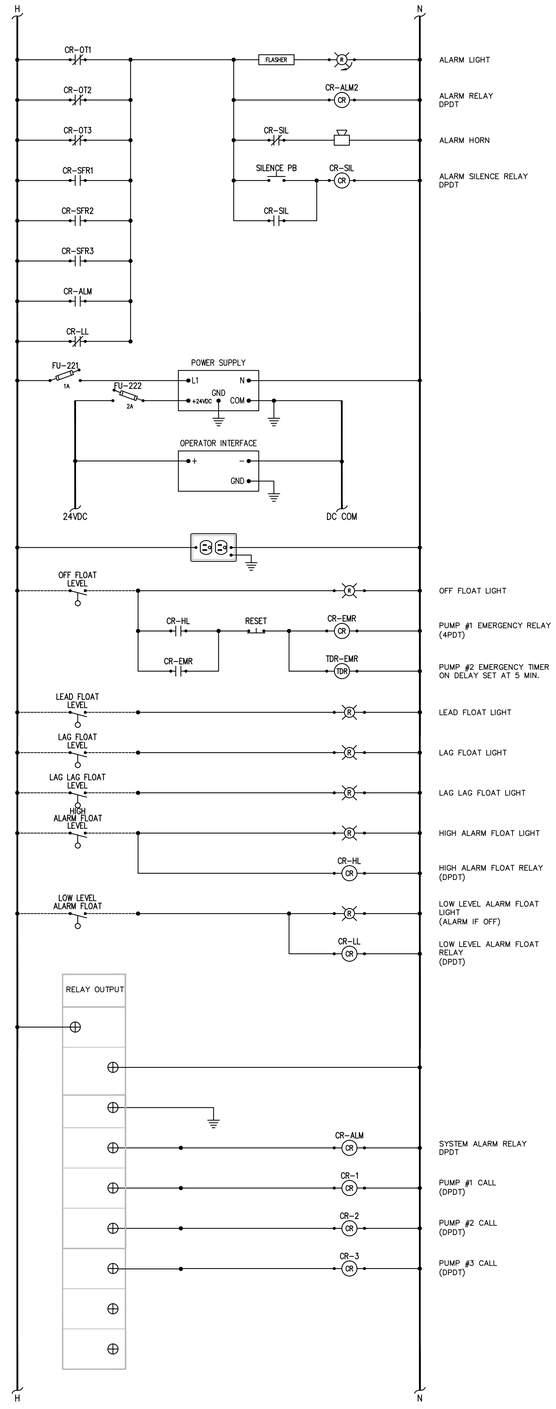

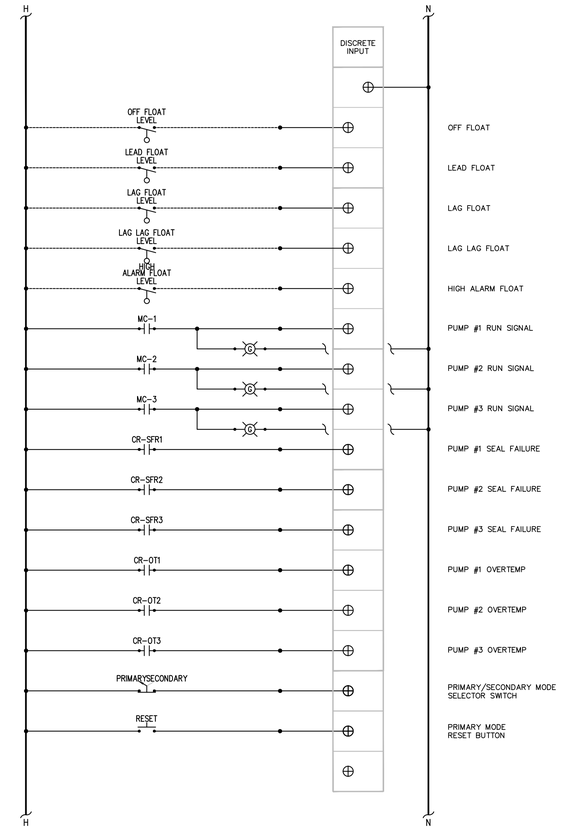

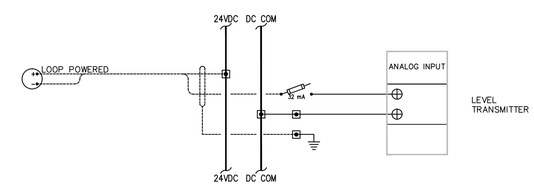

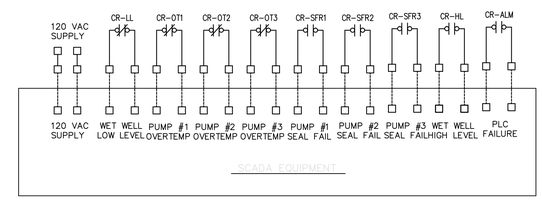

CITY OF LEANDER SCADA SYSTEM INPUTS

GENERAL NOTES:

1. PRIMARY PUMP CONTROL TO BE VIA LEVEL SENSOR INPUT THROUGH PLC.
2. IN CASE OF A LEVEL SENSOR INPUT FAILURE, PLC TO AUTOMATICALLY SWITCH TO FLOAT INPUT FOR PUMP OPERATION.
3. IN THE EVENT OF A PLC FAILURE, PUMPS TO SWITCH TO AUTOMATIC TIMER OPERATION.
4. DUCT SEAL CABLE ENTRANCES FROM WET WELL INTO J-BOX AND PUMP CONTROL PANEL.
5. ALL WORK TO BE PER NEC, LATEST EDITION.
6. SUBMIT ELECTRICAL ONE-LINE DIAGRAMS AND PUMP CONTROL SCHEMATICS FOR ENGINEERING APPROVAL.

FOR REVIEW ONLY

THIS DOCUMENT IS RELEASED FOR THE PURPOSE OF REVIEW ONLY, BY:

NAME: Frank T. Phelan

P.E. No.: 93874

NOT INTENDED FOR BIDDING OR CONSTRUCTION PURPOSES.

Jay Engineering Company, Inc.
P.O. Box 1220
Leander, Texas 78646-1220
Tel: (512) 259-3882 Fax: (512) 259-9016
Texas Registered Engineering Firm F-4780

CRYSTAL FALLS WEST - SEC. 1
WRP, OFFSITE LIFT STA. & RECLAIMED WATER PUMP STA.

LIFT STATION #16 ELECTRICAL SCHEMATIC

THE LOOKOUT GROUP

SCALE: AS NOTED | DWN: JJD | DESIGN: FAJ | DATE: DEC. 2012
DWG. NO. AS NOTED | JOB NO. 157-045-20

no.	date	Revisions	appv.

Sheet
OSLS 5.0

C:\Projects-Lookout-Group\Crystal-Falls-West_Sec1_WRP_LftSta_PrepSta_044-045-046\Const-Plans_LftSta\1st-Set\CFW-Sec1_Offsites_OSLS.5.0_Lft-Sta-Elec-Schmtic.dwg

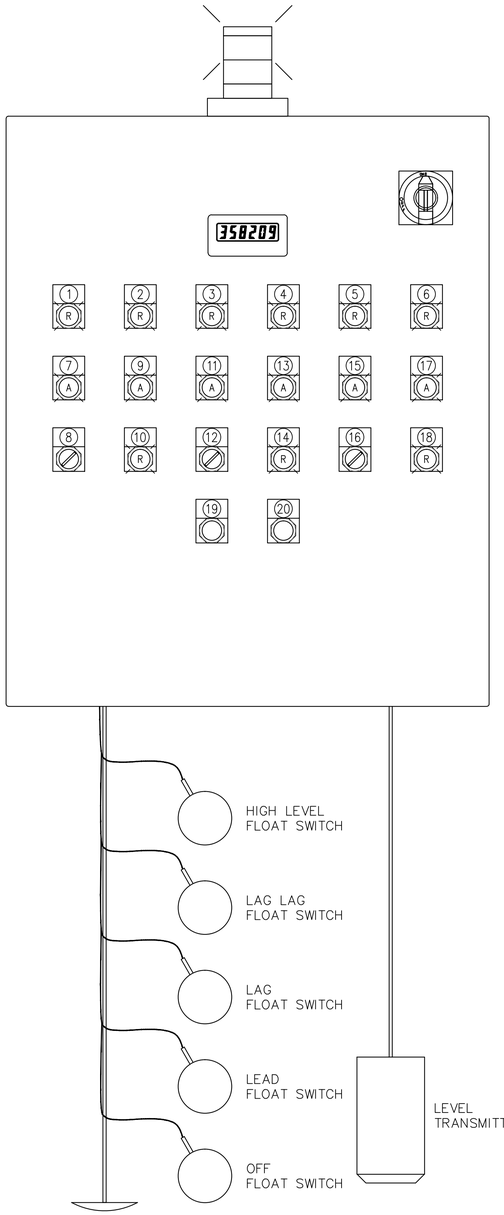

TYP. PCP PANEL LAYOUT

N.T.S.

DOOR TAG LAYOUT	
TAG #	TAG DESCRIPTION: LINE 1 / LINE 2 / LINE 3 / LINE 4
1	LOW LEVEL / ALARM FLOAT / ALARM IF OFF
2	OFF FLOAT
3	LEAD FLOAT
4	LAG LAG FLOAT
5	LAG FLOAT
6	HIGH / ALARM / FLOAT
7	PUMP #1 / SEAL FAILURE
8	PUMP #1 / HAND – OFF – AUTO
9	PUMP #1 / OVER TEMP
10	PUMP #1 / RUNNING
11	PUMP #2 / SEAL FAILURE
12	PUMP #2 / HAND – OFF – AUTO
13	PUMP #2 / OVER TEMP
14	PUMP #2 / RUNNING
15	PUMP #3 / SEAL FAILURE
16	PUMP #3 / HAND – OFF – AUTO
17	PUMP #3 / OVER TEMP
18	PUMP #3 / RUNNING
19	MOTOR / OVER TEMP / RESET
20	ALARM / SILENCE

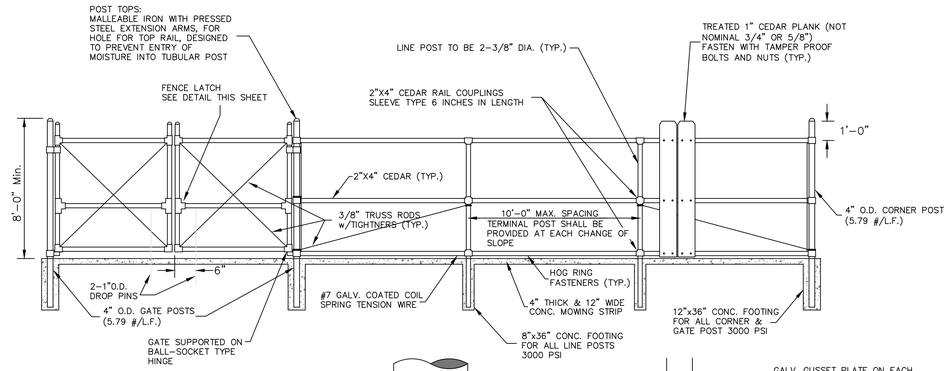

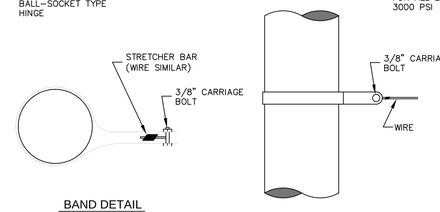

BAND DETAIL

BAND FOR WIRE STRETCHING

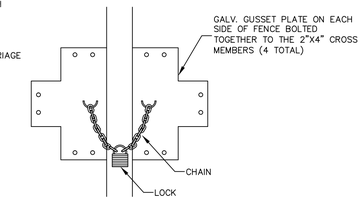

FENCE LATCH DETAIL

FENCE NOTES:

1.) THE GATE SHALL COME COMPLETE WITH TAMPER PROOF FRAMES, HINGES, BRACED AND PAD LOCKABLE. THE HINGES SHALL NOT TWIST OR TURN UNDER THE ACTION OF THE GATE. THE GATE SHALL BE INSTALLED SO THAT IT MAY NOT BE REMOVED WITHOUT DISASSEMBLING THE HARDWARE. THE HARDWARE ATTACHMENT BOLTS SHALL BE PEENED SO THAT REMOVAL WILL BE DIFFICULT.

2.) MOWING STRIP SHALL BE FORMED FROM DOMESTIC PORTLAND CEMENT WITH REGULAR AGGREGATE. IT SHALL BE TWELVE(12) INCHES WIDE AND A MINIMUM OF FOUR(4) INCHES THICK WITH TWO(2) INCHES ABOVE GROUND LEVEL. TWO(2) ROWS OF NUMBER THREE(3) BARS OF STEEL SHALL BE EVENLY SPACED ALONG THE FULL LENGTH OF THE MOW STRIP, AND A NUMBER THREE(3) BAR OF STEEL SHALL BE CROSS–TIED EVERY FOUR(4) FEET. EXPANSION JOINTS SHALL BE INSTALLED EVERY TWENTY(20 FEET. FENCE POST SHALL BE INSTALLED IN CENTER OF MOW STRIP.

3.) ALL POST SHALL BE SET PLUM AND SPACED AT MAXIMUM OF TEN(10) FEET APART. THE FENCE SHALL BE INSTALLED TO MAINTAIN NOT MORE THAN TWO(2) INCHES OF CLEARANCE FROM FINISHED GRADE.

4.) CENTER POST SHALL BE BRACED IN BOTH DIRECTIONS.

5.) FENCE HARDWARE TO BE RUST PROOF (H.D.G.) AND TAMPER PROOF.

6.) CEDAR PLANKS SHALL BE 1 INCH THICK X 8 FOOT TALL. (ACTUAL DIMENSIONS, NOT NOMINAL.)

SECURITY FENCE DETAILS

scale: N.T.S.

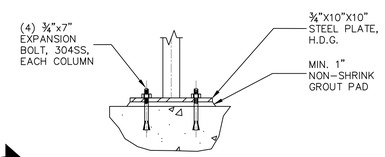

DETAIL B E.6.0

scale: N.T.S.

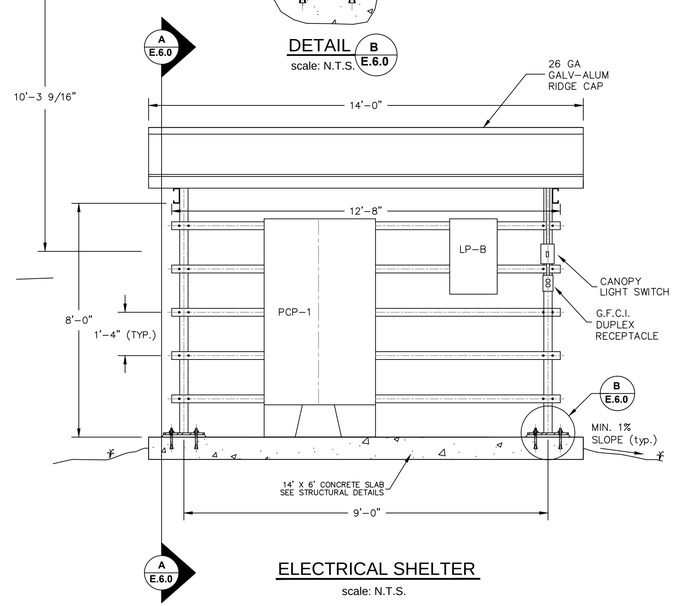

ELECTRICAL SHELTER

scale: N.T.S.

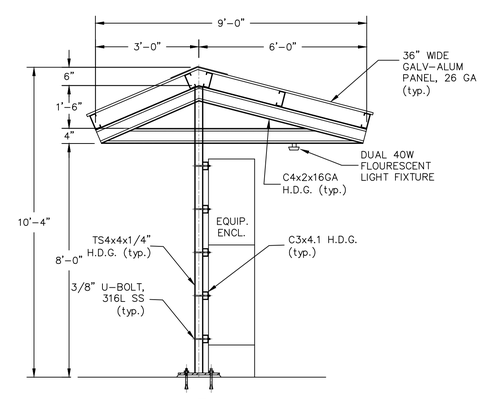

SHELTER SECTION A E.6.0

scale: N.T.S.

FOR REVIEW ONLY

THIS DOCUMENT IS RELEASED FOR THE PURPOSE OF REVIEW ONLY. BY:

NAME: Frank T. Phelan

P.E. No.: 93874

NOT INTENDED FOR BIDDING OR CONSTRUCTION PURPOSES.

Jay Engineering Company, Inc.
P.O. Box 1220
Leander, Texas 78646-1220
Tel: (512) 259-9088 Fax: (512) 259-9016
Texas Registered Engineering Firm F-4780

CRYSTAL FALLS WEST SEC 1
WRP, OFFSITE LIFT STA. & RECLAIMED WATER PUMP STA.

LIFT STATION #16
PUMP CONTROL PANEL & SHELTER

THE LOOKOUT GROUP

SCALE: AS NOTED DWN: JJD DESIGN: FAJ DATE: DEC 2012
DWG. NO. AS NOTED JOB NO. 157-045-20

No.	Date	Revisions	dpv.

Sheet
OSLS 6.0

C:\Projects-Lookout-Group\Crystal-Falls-West_Sec1_WRP_LftSta_PmpSta_044-045-046\Const-Plans_LftSta\1st-Set\CFW-Sec1_Offsites_OSLS.6.0_Lft-Sta-Panel-Shelter.dwg

NOTES:

1. EXISTING UTILITY LOCATIONS SHOWN HEREON ARE APPROXIMATE. CONTRACTOR IS TO VERIFY LOCATIONS OF ALL EXISTING UTILITY LINES PRIOR TO COMMENCING WORK.

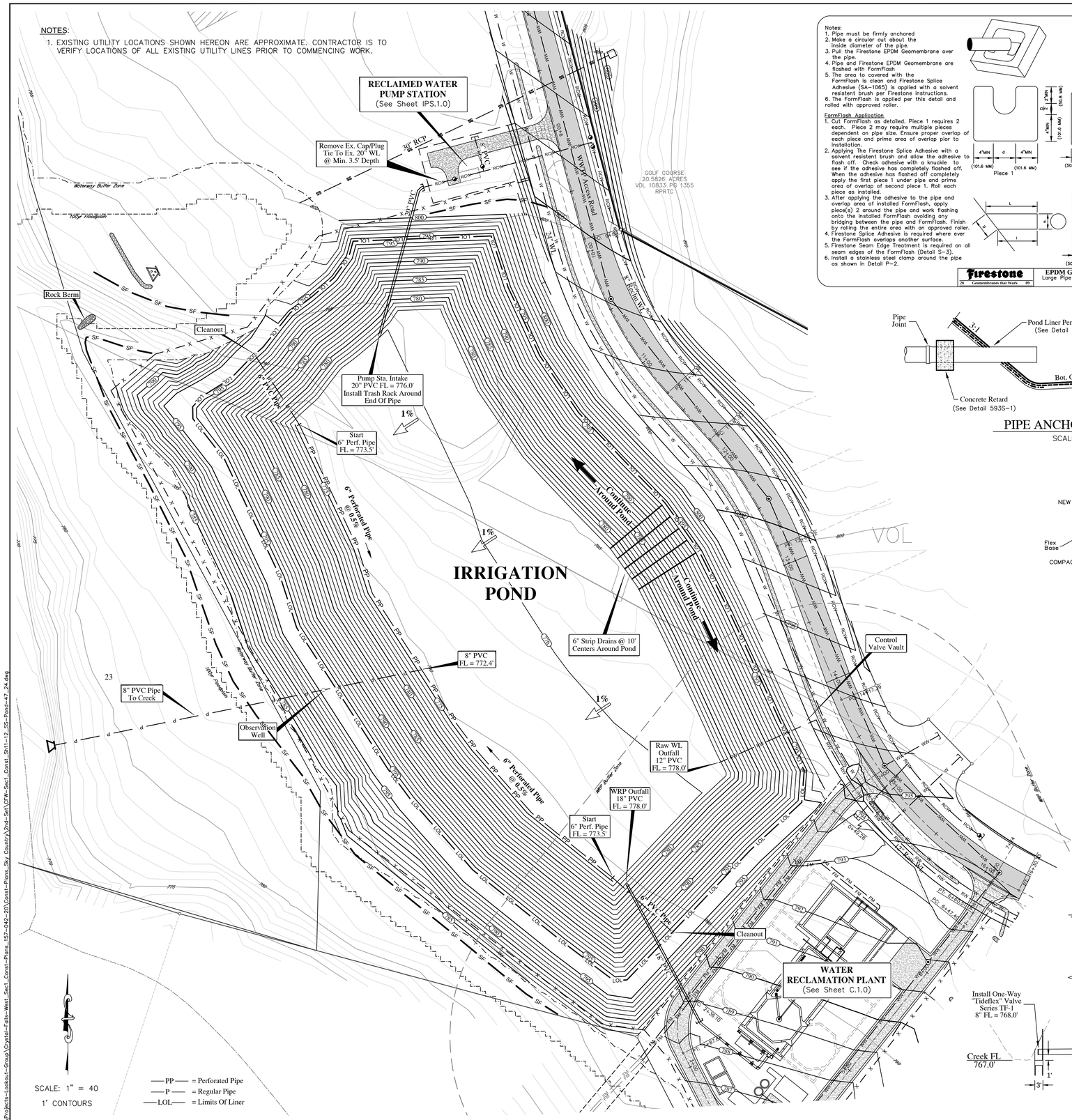

Notes:
1. Pipe must be firmly anchored
2. Make a circular cut about the inside diameter of the pipe.
3. Pull the Firestone EPDM Geomembrane over the pipe.
4. Pipe and Firestone EPDM Geomembrane are flashed with FormFlash
5. The area to covered with the FormFlash is clean and Firestone Splice Adhesive (SA-1065) is applied with a solvent resistent brush per Firestone instructions.
6. The FormFlash is applied per this detail and rolled with approved roller.

FormFlash Application
1. Cut FormFlash as detailed. Piece 1 requires 2 each. Piece 2 may require multiple pieces dependent on pipe size. Ensure proper overlap of each piece and prime area of overlap pior to installation.
2. Applying The Firestone Splice Adhesive with a solvent resistent brush and allow the adhesive to flash off. Check adhesive with a knuckle to see if the adhesive has completely flashed off. When the adhesive has flashed off completely apply the first piece 1 under pipe and prime area of overlap of second piece 1. Roll each piece as installed.
3. After applying the adhesive to the pipe and overlap area of installed FormFlash, apply piece(s) 2 around the pipe and work flashing onto the installed FormFlash avoiding any bridging between the pipe and FormFlash. Finish by rolling the entire area with an approved roller.
4. Firestone Splice Adhesive is required where ever the FormFlash overlaps another surface.
5. Firestone Seam Edge Treatment is required on all seam edges of the FormFlash (Detail S-3).
6. Install a stainless steel clamp around the pipe as shown in Detail P-2.

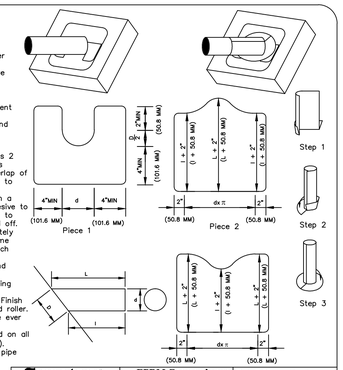

Firestone — 20 Geomembranes that Work 09 | EPDM Geomembrane Large Pipe Penetration | Detail No. P-3 Systems EPDM

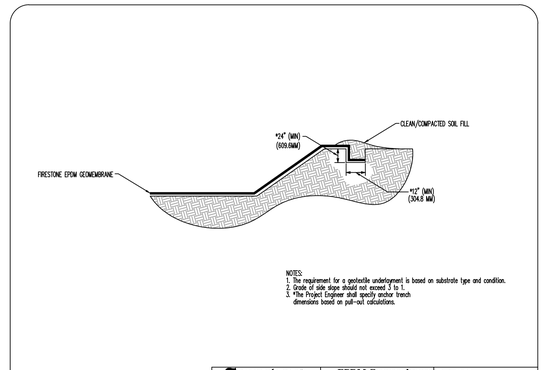

NOTES:
1. The requirement for a geotextile underlayment is based on substrate type and condition.
2. Grade of side slope should not exceed 3 to 1.
3. *The Project Engineer shall specify anchor trench dimensions based on pull-out calculations.

Firestone — 20 Geomembranes that Work 09 | EPDM Geomembrane Standard "U" Shaped Anchor Trench | Detail No. A-3 Systems EPDM

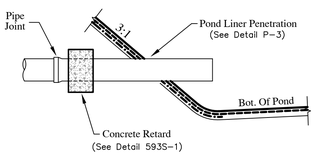

NOTES:
1. ANCHOR FINAL JOINT OF PIPE INTO POND WITH CONCRETE RETARD BEHIND POND SLOPE.

PIPE ANCHORING DETAIL

SCALE: N.T.S.

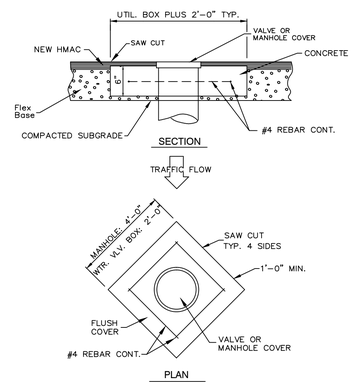

CLEANOUT/WELL CAP

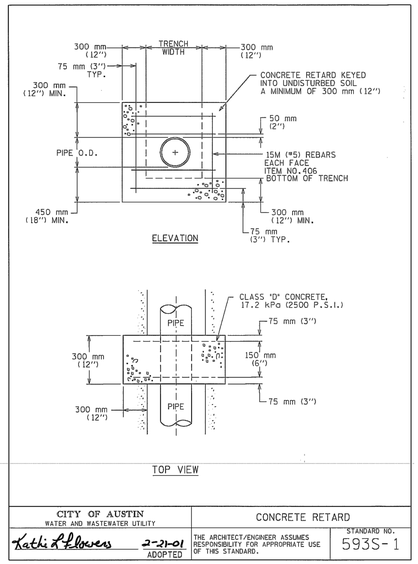

CITY OF AUSTIN WATER AND WASTEWATER UTILITY	CONCRETE RETARD
Kathi L. Powers 2-21-01 ADOPTED	THE ARCHITECT/ENGINEER ASSUMES RESPONSIBILITY FOR APPROPRIATE USE OF THIS STANDARD. STANDARD NO. 593S-1

NOTES:
1. GEOMEMBRANE SHALL BE FIRESTONE 1.14MM(0.045") EPDM GEOMEMBRANE OR APPROVED EQUAL.
2. GEOMEMBRANE SEAMS SHALL BE ORIENTED VERTICALLY ON SLOPES. NO HORIZONTAL SEAMS ON SLOPES ARE PERMITTED.
3. 8 OZ. NON-WOVEN GEOTEXTILE SHALL BE MIRAFI 180N OR APPROVED EQUAL.
4. 6" STRIP DRAINS SHALL BE SITEDRAIN STRIP 6000 OR APPROVED EQUAL.
5. GRAVEL UNDERDRAIN AGGREGATE SHALL CONSISIT OF HARD, DURABLE, CLEAN, WASHED GRAVEL OR CRUSHED STONE, RANGING IN SIZE FROM 5/8" TO 1" AND BE FREE FROM ORGANIC MATTER, CLAY BALLS, OR OTHER DELETERIOUS MATTER.

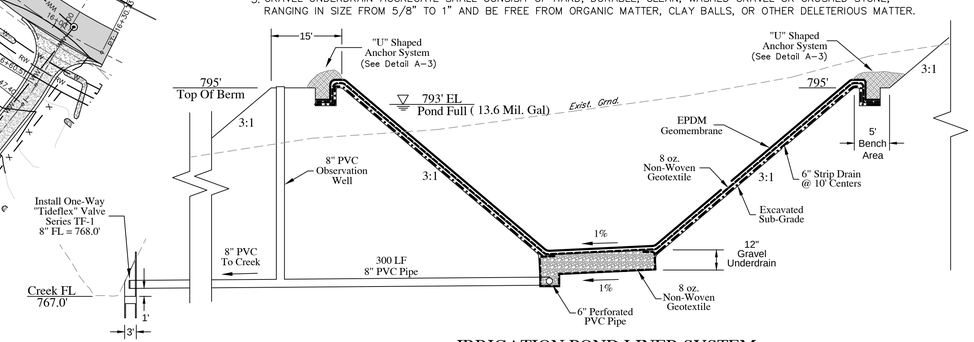

IRRIGATION POND LINER SYSTEM

SCALE: N.T.S.

FOR REVIEW ONLY

THIS DOCUMENT IS RELEASED FOR THE PURPOSE OF REVIEW ONLY, BY:

NAME: David F. Simons

P.E. No.: 94666

NOT INTENDED FOR BIDDING OR CONSTRUCTION PURPOSES.

no.	date	Revisions	opvr.

Jay Engineering Company, Inc.
P.O. Box 1220
Lakeway, Texas 78646-1220
Tel: (512) 259-3882 Fax: (512) 259-8016
TEXAS REGISTERED ENGINEERING FIRM F-4780

CRYSTAL FALLS WEST - Sec.1
WW, REACLAIMED WATER & WATER IMPROVEMENTS

IRRIGATION POND

THE LOOKOUT GROUP

SCALE: AS NOTED | DWN: JJD | DESIGN: SDK | DATE: DEC 2012
DWG. NO. AS NOTED | JOB NO. 157-046-20

Sheet
IP.1.0

C:\Projects-Lookout-Group\Crystal-Falls-West-Sec1_Const-Plans_157-042-20\Const-Plans_Sky Country\2nd-Set\CFW-Sec1_Const_Sh11-12_SS-Pond-47_24.dwg

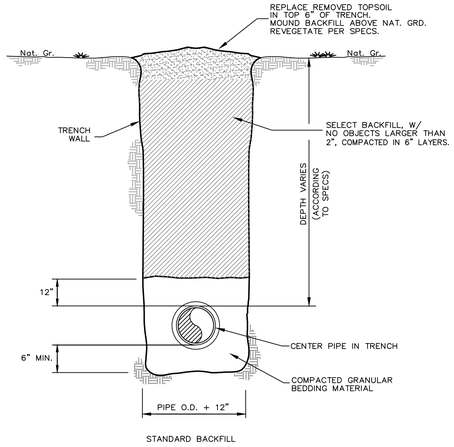

TYPICAL PIPE TRENCH AND EMBEDMENT

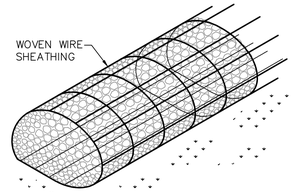

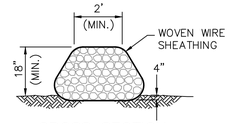

CROSS SECTION

NOTES:

1. USE ONLY OPEN GRADED ROCK 4 – 8 INCH DIAMETER FOR STREAMFLOW CONDITION; USE OPEN GRADED ROCK 3 – 5 INCH DIAMETER FOR OTHER CONDITIONS.
2. THE ROCK BERM SHALL BE INSPECTED WEEKLY OR AFTER EACH RAIN, AND THE STONE SHALL BE REPLACED WHEN THE STRUCTURE CEASES TO FUNCTION AS INTENDED, DUE TO SILT ACCUMULATION AMONG THE ROCKS, WASHOUT, CONSTRUCTION TRAFFIC DAMAGE, ETC.
3. WHEN SILT REACHES A DEPTH EQUAL TO ONE-THIRD THE HEIGHT OF THE BERM OR ONE FOOT, WHICHEVER IS LESS, THE SILT SHALL BE REMOVED AND DISPOSED OF IN AN APPROVED SITE AND A MANNER AS NOT TO CREATE A SILTATION PROBLEM.
4. DAILY INSPECTION SHALL BE MADE ON SEVERE SERVICE ROCK BERM; SILT SHALL BE REMOVED WHEN ACCUMULATION REACHES 6 INCHES.
5. WHEN THE SITE IS COMPLETELY STABILIZED, THE BERM AND ACCUMULATED SILT SHALL BE REMOVED AND DISPOSED OF IN AN APPROVED MANNER.

ROCK BERM

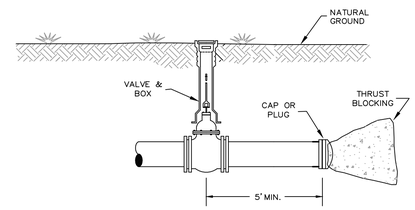

PIPE STUB DETAIL

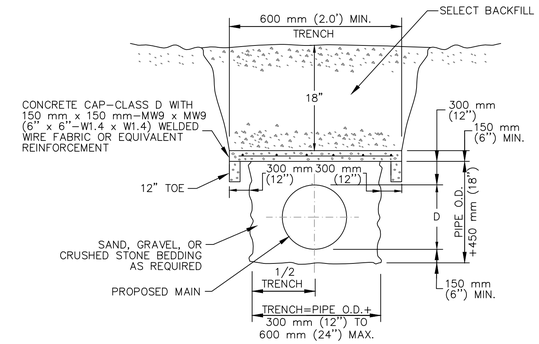

CONCRETE CAP DETAIL

N.T.S.

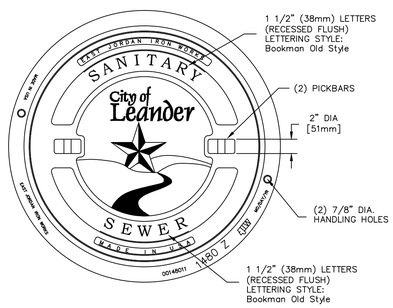

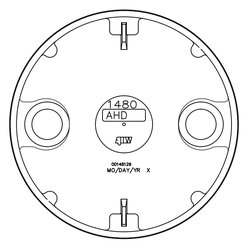

BOTTOM VIEW OF COVER

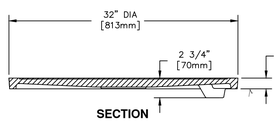

SECTION

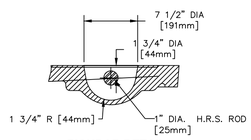

PICKBAR DETAIL

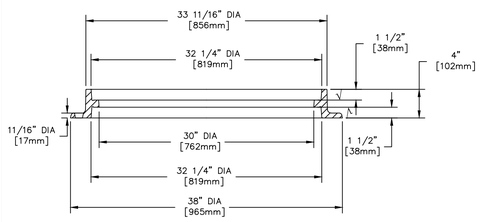

SECTION

MANHOLE ASSEMBLY	EST. WT. COVER: 200 LBS 91kg FRAME: 155 LBS 70kg UNIT: 355 LBS 161kg
EAST JORDAN IRON WORKS PRODUCT NO. 00148107 OR APPROVED EQUAL	OPEN AREA N/A MAT'L SPEC. COVER – GRAY IRON ASTM A48 CL35B FRAME – GRAY IRON ASTM A48 CL35B

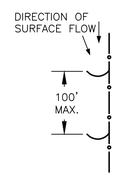

NOTE: SPACING DISTANCES WILL VARY, BUT ARE NOT TO EXCEED 100 FEET.

II. SIZING REQUIREMENTS: J15, J25

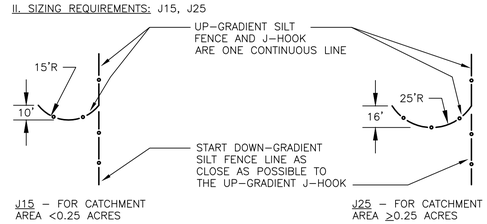

PLAN VIEW

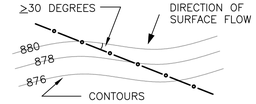

NOTE:
J–HOOKS SHALL BE USED WHEN THE SILT FENCE IS INSTALLED AT AN ANGLE OF 30 DEGREES OR GREATER FROM PARALLEL TO THE CONTOURS.

J-HOOK SILT FENCE DETAIL

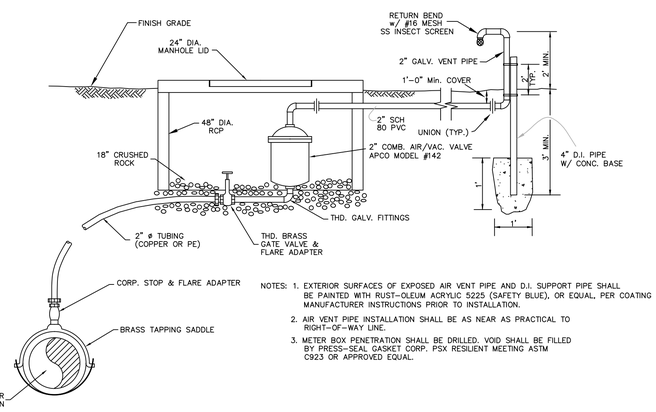

NOTES:
1. EXTERIOR SURFACES OF EXPOSED AIR VENT PIPE AND D.I. SUPPORT PIPE SHALL BE PAINTED WITH RUST-OLEUM ACRYLIC 5225 (SAFETY BLUE), OR EQUAL, PER COATING MANUFACTURER INSTRUCTIONS PRIOR TO INSTALLATION.
2. AIR VENT PIPE INSTALLATION SHALL BE AS NEAR AS PRACTICAL TO RIGHT-OF-WAY LINE.
3. METER BOX PENETRATION SHALL BE DRILLED. VOID SHALL BE FILLED BY PRESS-SEAL GASKET CORP. PSX RESILIENT MEETING ASTM C923 OR APPROVED EQUAL.

STANDARD AIR RELEASE VALVE

N.T.S.

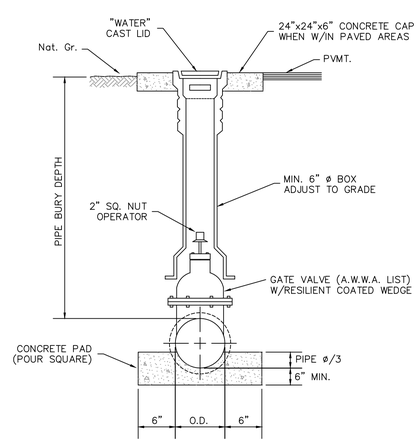

TYPICAL GATE VALVE

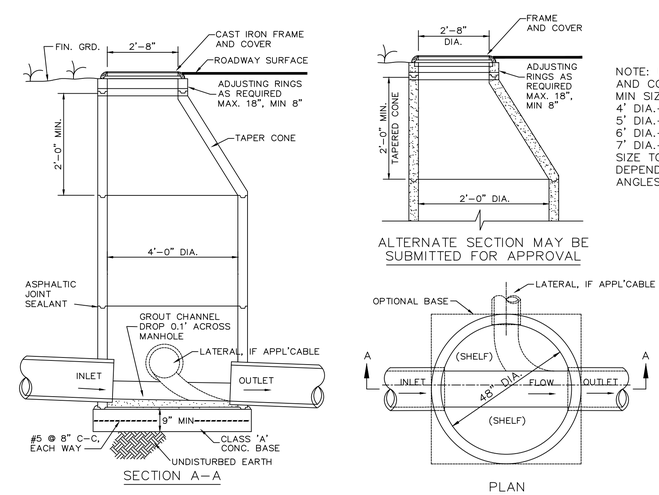

NOTE: USE 32" FRAME AND COVER.
MIN SIZES:
4' DIA.–18" TO 30"
5' DIA.–36" TO 42"
6' DIA.–48" TO 54"
7' DIA.–60" TO 66"
SIZE TO BE USED IS DEPENDENT ON SEWER ANGLES.

PRECAST CONCRETE STORM SEWER MANHOLE

FOR REVIEW ONLY

THIS DOCUMENT IS RELEASED FOR THE PURPOSE OF REVIEW ONLY. BY:
NAME: David F. Simons
P.E. No.: 94666
NOT INTENDED FOR BIDDING OR CONSTRUCTION PURPOSES.

Jay Engineering Company, Inc.
P.O. Box 1220
Lakeway, Texas 78646-1220
Tel: (512) 259-3882 Fax: (512) 259-9016
TEXAS REGISTERED ENGINEERING FIRM F-4799

CRYSTAL FALLS WEST, SEC. 1
WRP, OFFSITE LIFT STA. & RECLAIMED WATER PUMP STA.

STANDARD DETAILS

THE LOOKOUT GROUP

SCALE: AS NOTED | DWN: JJD | DESIGN: SDK | DATE: DEC 2012
DWG. NO. AS NOTED | JOB NO. 157-043-20

No.	date	Revisions	appv.

Sheet
D.1.0

C:\Projects-Lookout-Group\Crystal-Falls-West_Sec1_WRP_Lt(Sta_PropSta_044-045-046)\Const-Plans_WRP\1st-Set\CFW-Sec1_WRP_Sh-D.1.0_Details1.dwg

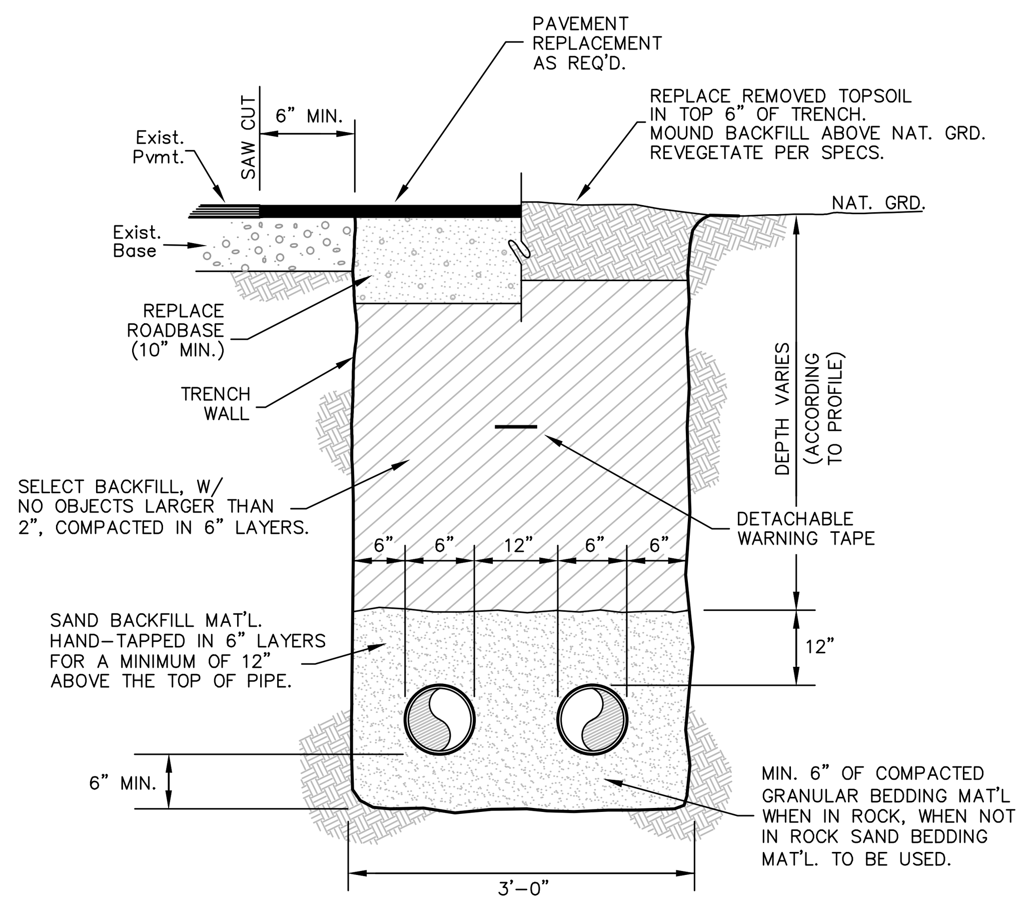

TYPICAL PIPE TRENCH AND EMBEDMENT

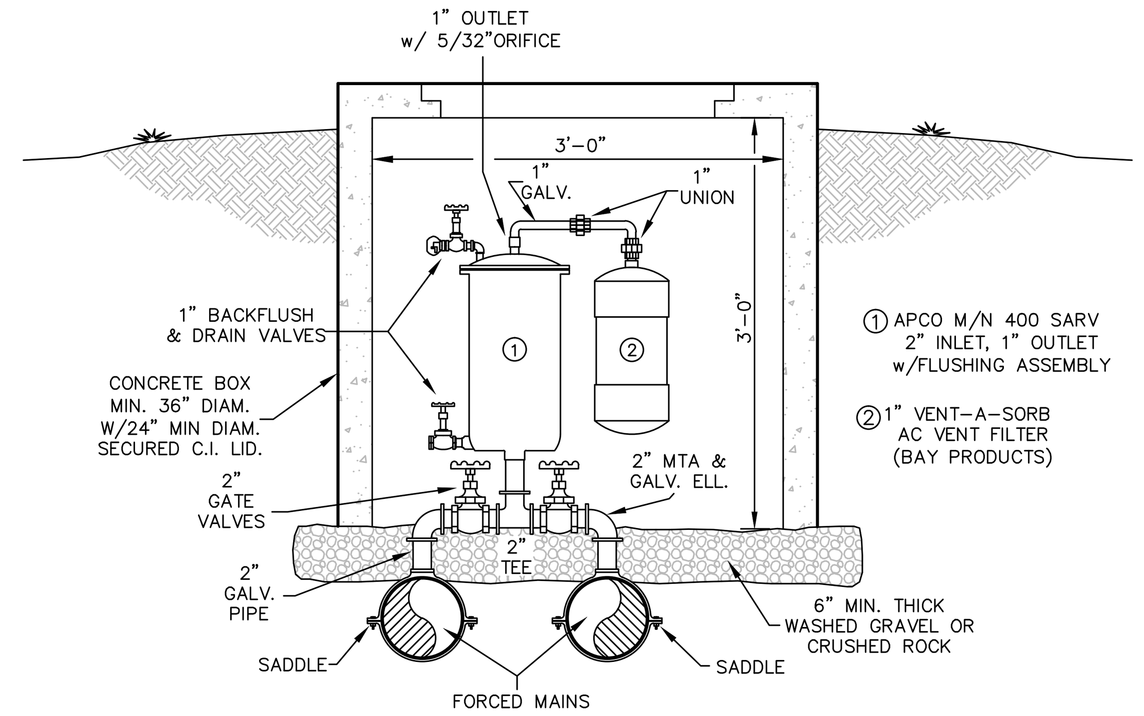

① APCO M/N 400 SARV 2" INLET, 1" OUTLET w/FLUSHING ASSEMBLY

② 1" VENT-A-SORB AC VENT FILTER (BAY PRODUCTS)

WASTEWATER AIR RELEASE DETAIL FOR DOUBLE FORCED MAINS

N.T.S.

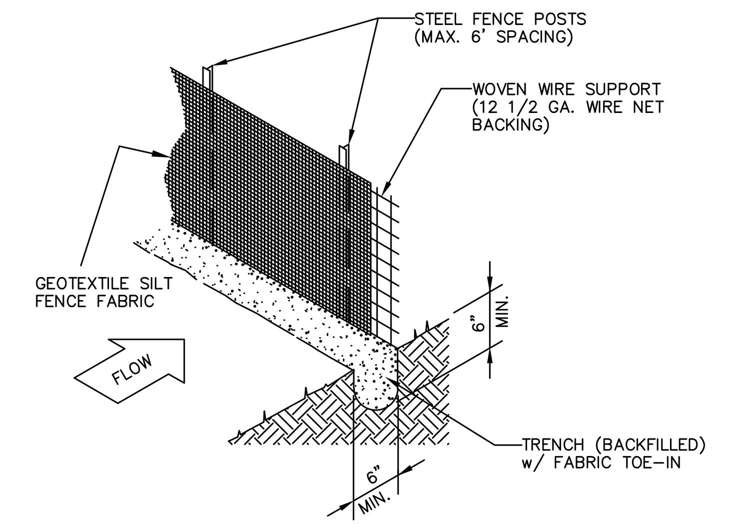

GENERAL NOTES:

1. STEEL POSTS WHICH SUPPORT THE SILT FENCE SHALL BE INSTALLED ON A SLIGHT ANGLE TOWARD THE ANTICIPATED RUNOFF SOURCE. POSTS MUST BE EMBEDDED A MINIMUM OF ONE FOOT.
2. THE TOE OF THE SILT FENCE SHALL BE TRENCHED IN WITH A SPADE OR MECHANICALLY TRENCHED, SO THAT THE DOWNSLOPE FACE OF THE TRENCH IS FLAT AND PERPENDICULAR TO THE LINE OF FLOW.
3. THE TRENCH MUST BE A MINIMUM OF 6 INCHES DEEP AND 6 INCHES WIDE TO ALLOW FOR THE SILT FENCE MATERIAL TO BE LAID IN THE GROUND AND BACKFILLED WITH COMPACTED MATERIAL.
4. SILT FENCE SHOULD BE SECURELY FASTENED TO EACH STEEL POST OR TO WOVEN WIRE, WHICH IS IN TURN ATTACHED TO THE STEEL FENCE POSTS.
5. INSPECTION SHALL BE MADE WEEKLY OR AFTER EACH RAINFALL EVENT, AND REPAIR OR REPLACEMENT SHALL BE MADE PROMPTLY AS NEEDED.
6. SILT FENCE SHALL BE REMOVED WHEN THE SITE IS COMPLETELY STABILIZED, SO AS NOT TO BLOCK OR IMPEDE STORM FLOW OR DRAINAGE. ACCUMULATED SILT SHALL BE DISPOSED OF AS IN NO. 7 BELOW.
7. ACCUMULATED SILT SHALL BE REMOVED WHEN IT REACHES A DEPTH OF 6 INCHES. THE SILT SHALL BE DISPOSED OF IN AN APPROVED SITE AND IN SUCH A MANNER AS TO NOT CONTRIBUTE TO ADDITIONAL SILTATION.

STANDARD SILT FENCE

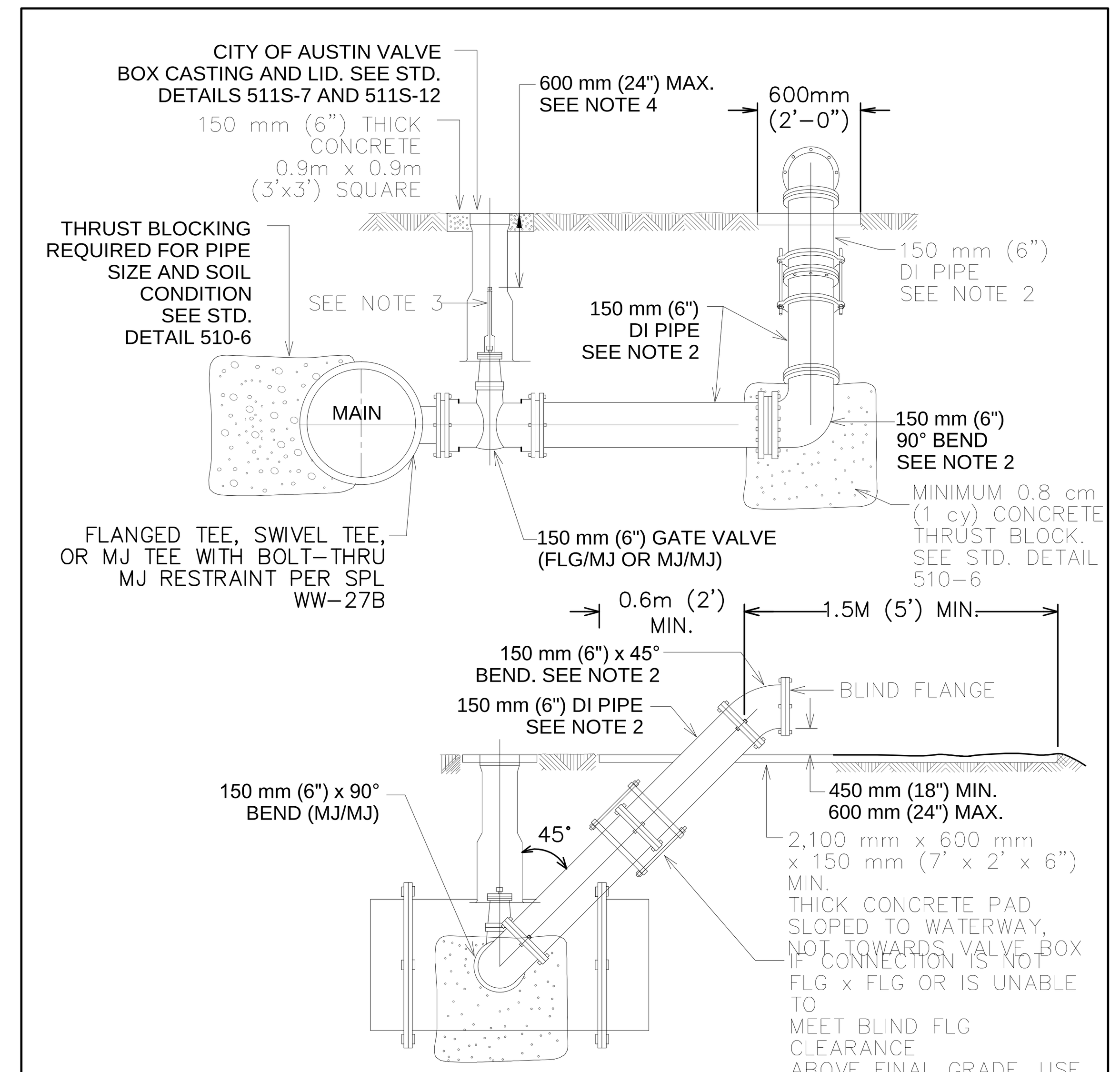

NOTES:
1. WRAP 8 MIL POLY FILM WRAP ON ALL BURIED PIPE AND FITTINGS.
2. PROVIDE RESTRAINED JOINTS FOR ALL JOINTS PER SPL WW-27A. FLG X FLG JOINTS ARE ACCEPTABLE FROM 90° BEND TO BLIND FLANGE.
3. WELD SOCKET 64mm x 51mm (2-1/2" x 2") TO 25mm (1") SCH. 40 ROUND STEM EXTENSION, FITTED ON OPERATING NUT. USE SCH. 80 ROUND STEM EXTENSION FOR LENGTHS OVER 3m (10').
4. VALVE EXTENSIONS ARE REQUIRED ON ALL VALVES THAT EXCEED .9m (3') DEEP FROM FINISHED GRADE TO VALVE NUT. VALVE EXTENSIONS SHALL BE PLACED SUCH THAT THE NUT IS BETWEEN 450mm AND 600mm (18" AND 24") FROM FINISHED GRADE.
5. ABOVE-GROUND EXPOSED PIPE SURFACES SHALL BE PAINTED PER SPL WW-3C. POTABLE WATER PIPE ... BLUE.

CITY OF AUSTIN AUSTIN WATER UTILITY	DRAIN VALVE INSTALLATION	
RECORD COPY SIGNED BY KATHI L FLOWERS 08/31/2011	THE ARCHITECT/ENGINEER ASSUMES RESPONSIBILITY FOR APPROPRIATE USE OF THIS STANDARD.	STANDARD NO. 511S-9A

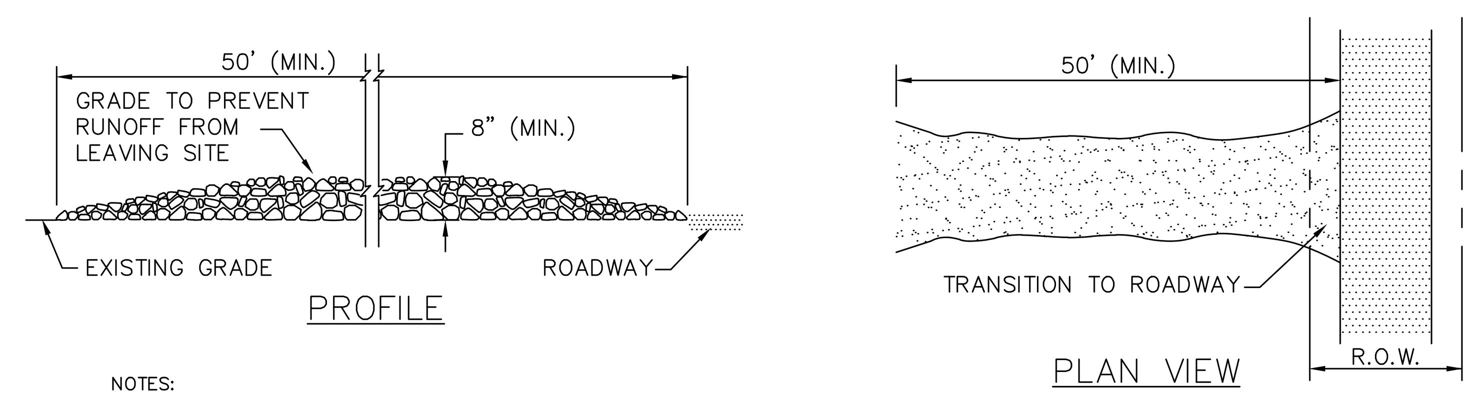

NOTES:
1. STONE SIZE – 3 TO 5 INCH OPEN GRADED ROCK.
2. LENGTH – AS EFFECTIVE, BUT NO LESS THAN 50 FEET.
3. THICKNESS – NOT LESS THAN 8 INCHES.
4. WIDTH – NOT LESS THAN FULL WIDTH OF ALL POINTS OF INGRESS OR EGRESS.
5. WASHING – WHEN NECESSARY, WHEELS SHALL BE CLEANED TO REMOVE SEDIMENT PRIOR TO ENTRANCE ONTO PUBLIC ROADWAY. WHEN WASHING IS REQUIRED, IT SHALL BE DONE ON AN AREA STABILIZED WITH CRUSHED STONE WHICH DRAINS INTO AN APPROVED TRAP OR SEDIMENT BASIN. ALL SEDIMENT SHALL BE PREVENTED FROM ENTERING ANY STORM DRAIN, DITCH OR WATERCOURSE USING APPROVED METHODS.
6. MAINTENANCE – THE ENTRANCE SHALL BE MAINTAINED IN A CONDITION WHICH WILL PREVENT TRACKING OR FLOWING OF SEDIMENT INTO PUBLIC ROADWAYS. THIS MAY REQUIRE PERIODIC TOP DRESSING WITH ADDITIONAL STONE AS CONDITIONS DEMAND, AND REPAIR AND/OR CLEAN- OUT OF ANY MEASURES USED TO TRAP SEDIMENT. ALL SEDIMENT SPILLED, DROPPED, WASHED OR TRACKED ONTO PUBLIC ROADWAY MUST BE REMOVED IMMEDIATELY.
7. DRAINAGE – ENTRANCE MUST BE PROPERLY GRADED OR INCORPORATE A DRAIN SWALE TO PREVENT RUNOFF FROM LEAVING THE CONSTRUCTION SITE.

STABILIZED CONSTRUCTION ENTRANCE

N.T.S.

THRUST BLOCKING SCHEDULE

ASSUMPTIONS: LINE PRESSURE - 165 psi, ALLOWABLE BEARING - 4000 psf, SAFETY FACTOR - 3

			11 1/4° BEND			22 1/2° BEND			45° BEND			90° BEND			TEE & PLUG		
PIPE DIAMETER	PIPE AREA Sq. In.	X	THRUST Lbs.	AREA Sq. Ft.	A Ft.	THRUST Lbs.	AREA Sq. Ft.	B Ft.	THRUST Lbs.	AREA Sq. Ft.	C Ft.	THRUST Lbs.	AREA Sq. Ft.	D Ft.	THRUST Lbs.	AREA Sq. Ft.	E Ft.
4" - 12"	113	1.5'	3,666	2.7	1.6	7,296	5.5	2.3	14,312	10.7	3.3	26,445	19.8	4.4	18,661	14	3.7
16"	201	2'	6,517	4.9	2.2	12,971	9.7	3.1	25,443	19.1	4.4	47,013	35.3	5.9	33,175	24.9	5.0
24"	452	3'	14,663	11	3.3	29,184	21.9	4.7	57,247	42.9	6.5	105,779	79.3	8.9	74,645	56	7.5

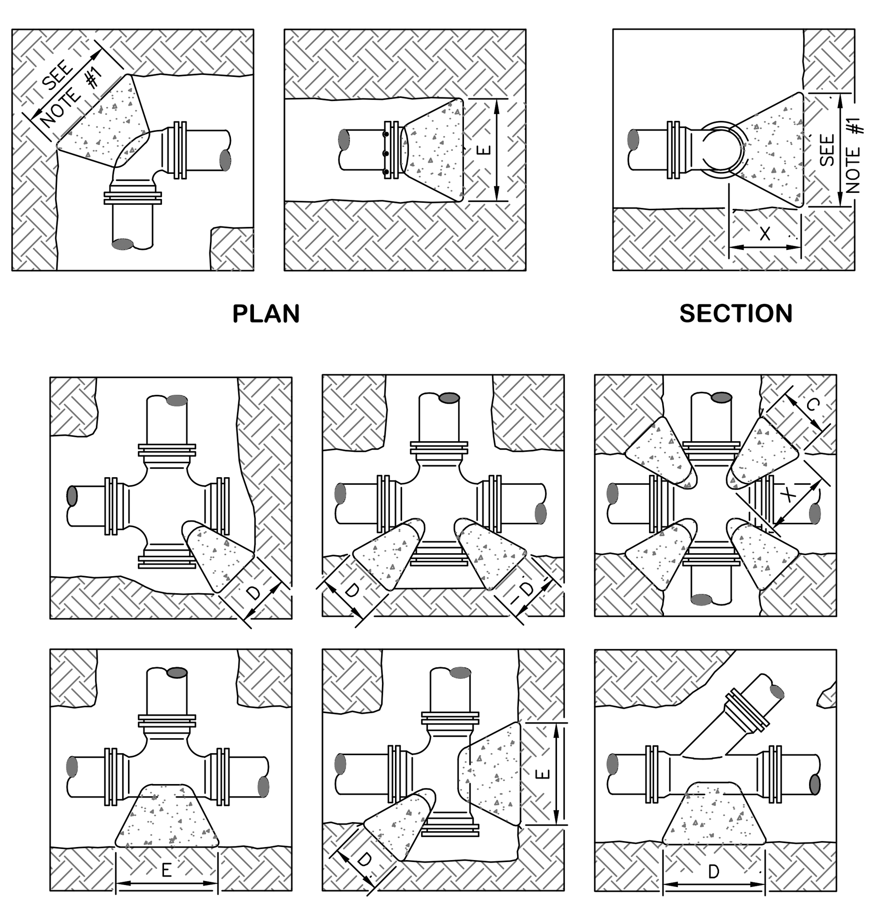

NOTES:
1. USE A, B, C, D or E AS APPROPRIATE. REFER TO SCHEDULE.
2. ALL CONCRETE THRUST BLOCKS SHALL BEAR AGAINST UNDISTURBED TRENCH WALLS. DISTANCE (X) FROM PIPE FITTING TO TRENCH WALL SHALL BE AS SHOWN IN THE SCHEDULE OR A MIN. OF 12" AT THE THRUST BLOCK.
3. VERTICAL DIMENSION OF BEARING AREA AGAINST TRENCH WALL OF THRUST BLOCK SHALL BE EQUAL TO HORIZONTAL DIMENSION OF A, B, C, D, OR E AS APPROPRIATE. REFER TO SCHEDULE AND SECTION DRAWING.
4. ALL JOINTS SHALL BE TEMPORARILY JACKED WHEN POURING THRUST BLOCKS. ALL JOINTS OF FITTINGS SHALL BE KEPT FREE OF ANY CONCRETE.
5. ALL CONCRETE THRUST BLOCKS SHALL CONSIST OF A MIXTURE OF 1:2:6 OF CEMENT TO WASHED SAND TO GRAVEL & SHALL BE CURED FOR A MIN. OF 24 HRS.
6. CONCRETE THRUST BLOCKS SHALL APPLY TO ALL PIPE FITTINGS.

THRUST BLOCKING DETAIL

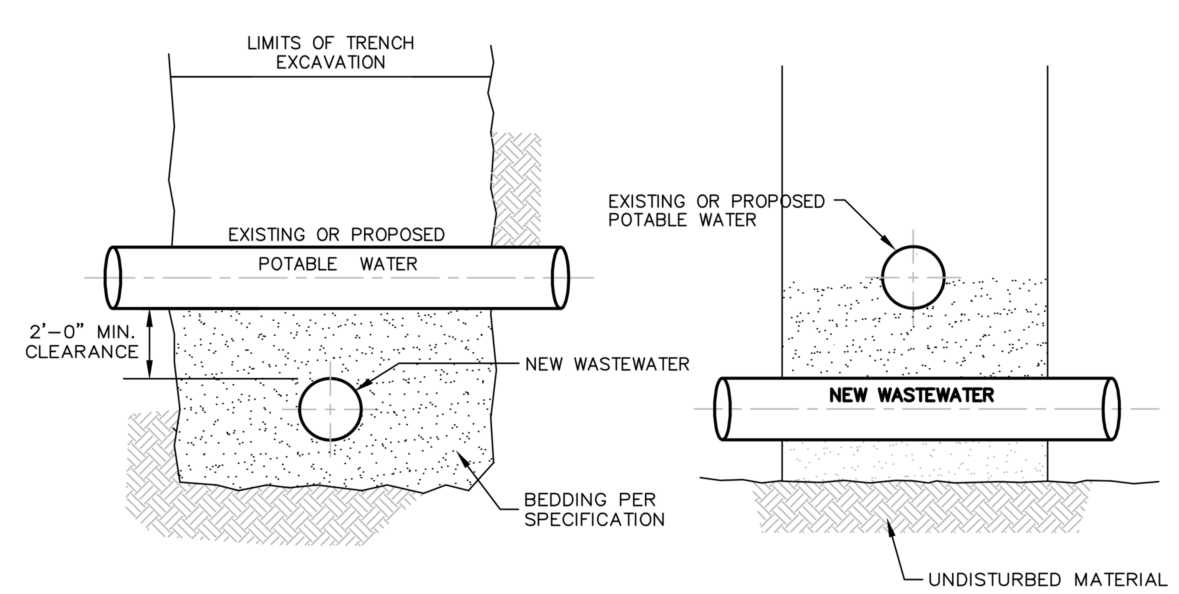

NOTES:

1. MINIMUM VERTICAL SEPARATION 2'-0"
2. DETAIL NOT APPLICABLE TO PRIVATE SERVICE CONNECTIONS.
3. SUPPORT AND PROTECT EXISTING WATER LINE, IF APPLICABLE.
4. INSTALL STEEL CASING WHERE INDICATED IN THE DRAWINGS.

WATER LINE CROSSING

N.T.S.

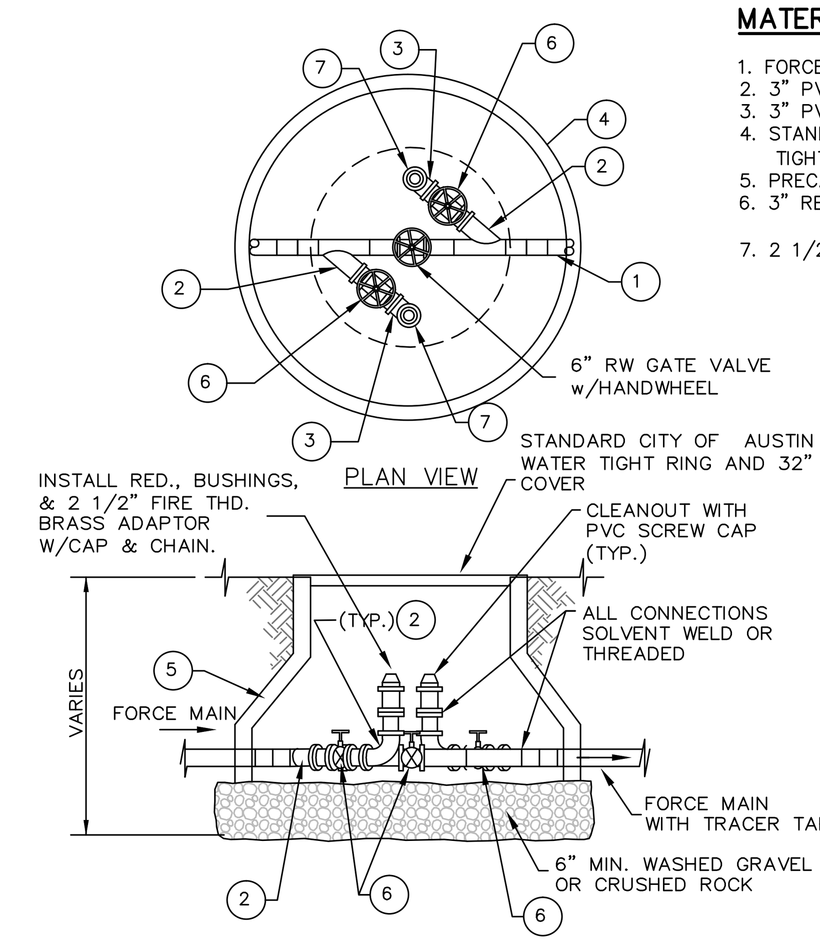

MATERIALS LIST:

1. FORCED MAIN 6" TYP.
2. 3" PVC SCH 40 WYE
3. 3" PVC SCH 40 90° BEND
4. STANDARD CITY OF AUSTIN WATER TIGHT RING & 32" COVER
5. PRECAST SECTION PER ASTM C-478
6. 3" RESILIENT WEDGE GATE VALVE
7. 2 1/2" BRASS SCREW CAP

FORCED MAIN FLUSHING & CLEANOUT ASSEMBLY (Main Line)

N.T.S.

FOR REVIEW ONLY
THIS DOCUMENT IS RELEASED FOR THE PURPOSE OF REVIEW ONLY, BY:
NAME: David F. Simons
P.E. No.: 94666
NOT INTENDED FOR BIDDING OR CONSTRUCTION PURPOSES.

Jay Engineering Company, Inc.
P.O. Box 1220
Leander, Texas 78646-1220
Tel. (512) 259-3882 Fax. (512) 259-8016

CRYSTAL FALLS WEST - SEC.1
WRP, OFFSITE LIFT STA. & RECLAIMED WATER PUMP STA.

STANDARD DETAILS

THE LOOKOUT GROUP

SCALE: AS NOTED DWN: JJD DESIGN: FAJ DATE: DEC 2012
DWG. NO. AS NOTED JOB NO. 157-047-20

no.	date	Revisions	appv.

Sheet **D.2.0**

C:\Projects-Lookout-Group\Crystal-Falls-West_Sec1_WRP_LftSta_PmpSta_044-045-046\Const-Plans_WRP\1st-Set\CFW-Sec1_WRP_Sh-D.2.0_Details2.dwg