VETERAN'S PARK

1200 SONNY DRIVE
LEANDER, TX 78641

SITE DEVELOPMENT PERMIT DRAWINGS

APPENDED SHEET INDEX:

Sheet No.		Description
1	C-1	COVER
2	N-1	NOTES
3	L-1	DEMOLITION, EROSION & SEDIMENTATION CONTROL PLAN
4	L-2	DEMOLITION, EROSION & SEDIMENTATION CONTROL PLAN
5	L-3	DEMOLITION, EROSION & SEDIMENTATION CONTROL PLAN
6	L-4	DEMOLITION, EROSION & SEDIMENTATION CONTROL DETAILS
7	L-5	SITE PLAN
8	L-6	SITE PLAN
9	L-7	SITE PLAN
10	L-8	LAYOUT PLAN
11	L-9	LAYOUT PLAN
12	L-10	LAYOUT PLAN
13	L-11	GRADING PLAN
14	L-12	GRADING PLAN
15	L-13	GRADING PLAN
16	L-14	DETAILS
17	L-15	DETAILS
18	L-15D	DETAILS - PAVER PLAZA DEDUCT
19	L-16	DETAILS
20	L-17	DETAILS
21	L-18	DETAILS
22	L-19	DETAILS
23	L-20	DETAILS
24	L-21	DETAILS
25	E-1	ELECTRICAL SITE PLAN
26	E-2	ELECTRICAL

KEY MAP

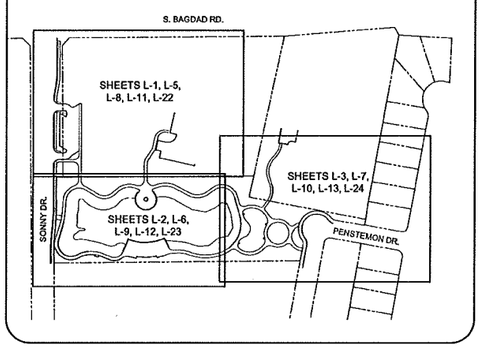

NORTH
1"=200'-0"

SITE LOCATION MAP

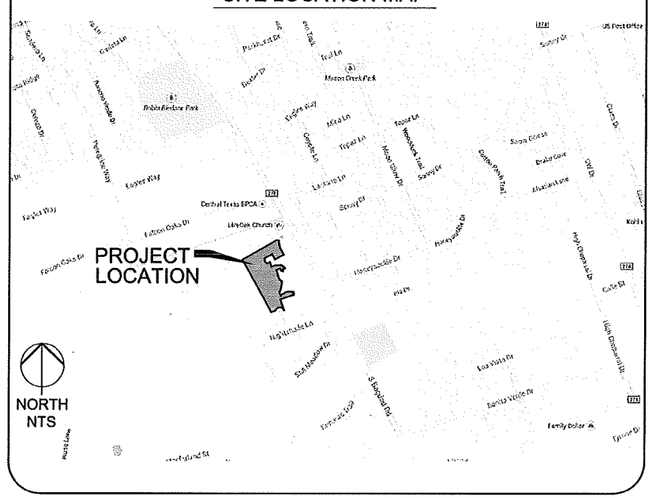

EABPRJB B5815662
TEXAS DEPARTMENT OF LICENSING & REGULATION REGISTRATION NUMBER/TAS INSPECTION REQUIRED

SPECIFICATIONS ADOPTED BY CITY OF LEANDER AND SPECIFICATION ITEMS LISTED AND DATED AS FOLLOWS, SHALL GOVERN THIS PROJECT: REQUIRED CONTRACT PROVISIONS FOR ALL FEDERAL-AID CONSTRUCTION CONTRACTS (FORM) FHWA 1273, MARCH 1994.

ALL RESPONSIBILITY FOR THE ADEQUACY OF THESE PLANS REMAINS WITH THE DESIGN CONSULTANT(S) WHO PREPARED THEM. IN ACCEPTING THESE PLANS THE CITY OF LEANDER MUST RELY UPON THE ADEQUACY OF THE WORK OF THE DESIGN CONSULTANT(S).

Know what's below. Call before you dig.

CAUTION - ELECTRICITY PRESENT

THE GENERAL CONTRACTOR AND ALL SUBCONTRACTORS THAT ENTER OR WORK ON THIS PROJECT ARE RESPONSIBLE FOR LOCATING, USING 811 OR THE ELECTRIC UTILITIES THEMSELVES, ALL OVERHEAD AND UNDERGROUND ELECTRICAL OF ANY NATURE AND FOR SAFEGUARDING ALL PERSONNEL ON THIS PROJECT, INCLUDING ANY OFF-SITE WORK AREAS SHOWN ON THE PLAN, FROM ANY INTERFERENCE WITH THE ELECTRIC LINES OR FROM DAMAGING, DIGGING UP OR UNCOVERING THE ELECTRIC LINES, GETTING A LADDER IN HARMS WAY OR ANY OTHER ACTIVITY OF ANY NATURE THAT COULD HARM ANY INDIVIDUAL IN ANY MANNER. THIS RESPONSIBILITY HEREBY REMOVES BAKER-AICKLEN & ASSOCIATES AND THE OWNER FROM ANY LIABILITY OF ANY NATURE.

NOTE FOR CONSTRUCTION

THESE DOCUMENTS ARE NOT APPROVED FOR CONSTRUCTION, AND SHALL NOT BE USED FOR CONSTRUCTION UNTIL APPROVED BY THE CITY OF LEANDER AND UNTIL ALL OTHER REQUIRED CITY, COUNTY, AND STATE PERMITS ARE OBTAINED.

CLIENT | OWNER

CITY OF LEANDER
CONTACT: STEVE BOSAK
PARKS AND RECREATION DIRECTOR
(512) 528-9909 MAIN OFFICE
(512) 528-9228 FAX

ACCEPTED FOR CONSTRUCTION

Tom Yantis, AICP, Assistant City Manager	DATE
Wayne S. Walls, P.E., CFM, City Engineer	DATE
Steve Bosak, Director of Parks and Recreation	DATE
Chief Joshua Davis, Fire Marshal	DATE

CONSULTANT

BAKER-AICKLEN & ASSOCIATES, INC.
ENGINEERING | SURVEYING | GIS | PLANNING | LANDSCAPE ARCHITECTURE
ROUND ROCK - CEDAR PARK
507 WEST LIBERTY AVENUE
ROUND ROCK TEXAS 78664
(512) 244-9620
ENGINEERING FIRM # F-45
SURVEY FIRM #100231-0
TBAE# 1787

REGISTERED LANDSCAPE ARCHITECT — BRANDON J. HAY — 2756 — STATE OF TEXAS
04/15/2015

REGISTERED LANDSCAPE ARCHITECT — BRIANNA BINKOWSKI — 7865 — STATE OF TEXAS
04/15/2015

STATE OF TEXAS — DAVID URBAN — 82783 — LICENSED PROFESSIONAL ENGINEER
6/1/2015
FOR SHEETS: L-11, L-20, L-21

Property Owner Name(s): CITY OF LEANDER	Phone: (512) 528-9909
Address: 406 MUNICIPAL DRIVE	City/State/Zip: LEANDER, TEXAS 78646
Acreage: 4.52 ACRES	Total Impervious Cover: 39,537 SF
Legal Description:	Property Address: 1200 SONNY DRIVE, LEANDER, TX 78641
Land Use Summary: OUTDOOR RECREATION	
Parking spaces required: PER THE DIRECTOR (PER THE AUSTIN TRANSPORTATION CRITERIA MANUAL, CHAPTER 25-6, APPENDIX A)	Spaces provided: 21 (INCLUDING 2 VAN-ACCESSIBLE HANDICAP SPACES)
Date: 04/14/2015	
Person Preparing Plan: BRANDON HAY, PLA	Company: BAKER-AICKLEN & ASSOCIATES, INC.
Address: 507 W. LIBERTY AVE.	City/State/Zip: ROUND ROCK, TEXAS 78664
Phone: (512) 244-9620	Fax: (512) 244-9623
Engineer: DAVID URBAN, P.E., CFM	Company: BAKER-AICKLEN & ASSOCIATES, INC.
Address: 507 W. LIBERTY AVE.	City/State/Zip: ROUND ROCK, TEXAS 78664
Phone: (512) 244-9620	Fax: (512) 244-9623
Agent:	Company:
Address:	City/State/Zip:
Phone:	Fax:

REVISIONS:

NO.	DATE	REVISIONS	RECOM'D
NO.1	4.15.15	SECOND SUBMITTAL REVIEW	CITY
NO.2	4.29.15	THIRD SUBMITTAL REVIEW	CITY

DESIGNED:	BH/GF		
DRAWN:	BH/GF		
REVIEWED:	BH		
PROJECT No. 0674-2-017		SHEET No.	C-1
PERMIT No. 15-SD-08		1 OF 27	
DATE:	04/15/2015		

GENERAL NOTES

1. ANY CHANGES OR REVISIONS TO THESE PLANS MUST FIRST BE SUBMITTED TO THE CITY BY THE DESIGN ENGINEER FOR REVIEW AND WRITTEN APPROVAL PRIOR TO CONSTRUCTION OF THE REVISION.
2. NO WORK IS TO BE PERFORMED BETWEEN THE HOURS OF 6:00 P.M. AND 7:00 A.M. THE CITY INSPECTOR RESERVES THE RIGHT TO REQUIRE THE CONTRACTOR TO UNCOVER ALL WORK PERFORMED WITHOUT INSPECTION. FURTHER, THERE IS A NOISE ORDINANCE IN EFFECT FOR CONSTRUCTION ACTIVITY BETWEEN THE HOURS OF 9PM AND 7AM. REQUESTS FOR EXCEPTIONS TO THE ORDINANCE MUST BE MADE TO LEANDER CITY COUNCIL.
3. NO STREET LIGHTS OR SIGNS OF ANY KIND ARE TO BE PLACED WITHIN ANY SIDEWALKS
4. NO BLASTING IS ALLOWED
5. ANY EXISTING UTILITIES, PAVEMENT, CURBS, SIDEWALKS, STRUCTURES, TREES, ETC., THAT ARE DAMAGED OR REMOVED SHALL BE REPAIRED OR REPLACED BY THE CONTRACTOR AT NO COST TO THE OWNER.
6. THE CONTRACTOR SHALL VERIFY ALL DEPTHS AND LOCATIONS OF EXISTING UTILITIES PRIOR TO ANY CONSTRUCTION. ANY DISCREPANCIES WITH CONSTRUCTION PLANS FOUND IN THE FIELD SHALL BE BROUGHT IMMEDIATELY TO THE ATTENTION OF THE ENGINEER.
7. THE CONTRACTOR SHALL CONTACT THE TEXAS EXCAVATION SYSTEM AT 1-800-344-8377 FOR EXISTING UTILITY LOCATIONS 48 HOURS PRIOR TO THE START OF CONSTRUCTION. THE CONTRACTOR SHALL VERIFY THE LOCATIONS OF ALL UTILITIES THAT ARE TO BE EXTENDED, TIED TO, CROSSED, OR ALTERED; OR SUBJECT TO DAMAGE/INCONVENIENCE BY THE CONSTRUCTION OPERATIONS.
8. THE CONTRACTOR SHALL GIVE THE CITY OF LEANDER 48 HOURS NOTICE BEFORE BEGINNING EACH PHASE OF CONSTRUCTION. TELEPHONE: 528-2700 (PUBLIC WORKS DEPARTMENT)
9. PRIOR TO ANY CONSTRUCTION, THE CONTRACTOR SHALL CONVENE A PRE-CONSTRUCTION CONFERENCE WITH THE CITY OF LEANDER, HIMSELF, THE ENGINEER, OTHER UTILITY COMPANIES, ANY AFFECTED PARTIES AND ANY OTHER ENTITY THE CITY OR ENGINEER MAY REQUIRE
10. A PRE-CONSTRUCTION CONFERENCE SHALL BE HELD WITH THE CONTRACTOR, DESIGN ENGINEER/PERMIT APPLICANT AND THE CITY OF LEANDER REPRESENTATIVES PRIOR TO INSTALLATION OF EROSION/SEDIMENTATION CONTROLS AND TREE PROTECTION MEASURES AND PRIOR TO BEGINNING ANY WORK. THE CONTRACTOR SHALL NOTIFY THE CITY OF LEANDER ENGINEERING DEPARTMENT ADMINISTRATIVE ASSISTANT AT (512) 528-2750 AT LEAST THREE (3) DAYS PRIOR TO THE MEETING DATE.
11. THE CONTRACTOR AND ENGINEER SHALL KEEP ACCURATE RECORDS OF ALL CONSTRUCTION THAT DEVIATES FROM THE PLANS. THE ENGINEER SHALL FURNISH THE CITY OF LEANDER ACCURATE "RECORD DRAWINGS" FOLLOWING THE COMPLETION OF ALL CONSTRUCTION. THESE "RECORD DRAWINGS" SHALL MEET THE SATISFACTION OF THE PUBLIC WORKS AND ENGINEERING DEPARTMENTS PRIOR TO FINAL ACCEPTANCE
12. WHEN CONSTRUCTION IS BEING CARRIED OUT WITHIN EASEMENTS, THE CONTRACTOR SHALL CONFINE HIS WORK TO WITHIN THE PERMANENT AND TEMPORARY EASEMENTS. PRIOR TO ACCEPTANCE, THE CONTRACTOR SHALL BE RESPONSIBLE FOR REMOVING ALL TRASH AND DEBRIS WITHIN THE PERMANENT EASEMENTS. CLEANUP SHALL BE TO THE SATISFACTION OF THE ENGINEER.
13. ALL CONSTRUCTION SHALL BE IN ACCORDANCE WITH THE LATEST CITY OF AUSTIN STANDARD SPECIFICATIONS. CITY OF AUSTIN STANDARDS SHALL BE USED UNLESS OTHERWISE NOTED IN DETAILS.
14. ALL MATERIALS AND CONSTRUCTION PROCEDURES WITHIN THE SCOPE OF THIS CONTRACT WHERE NOT SPECIFICALLY COVERED IN THE PROJECT SPECIFICATIONS SHALL CONFORM TO ALL CITY OF LEANDER DETAILS AND CITY OF AUSTIN STANDARD SPECIFICATIONS.
15. PROJECT SPECIFICATIONS TAKE PRECEDENCE OVER PLANS AND SPECIAL CONDITIONS GOVERN OVER TECHNICAL SPECIFICATIONS.
16. CONTRACTOR SHALL IMMEDIATELY NOTIFY THE ENGINEER OF ANY QUESTIONS THAT MAY RISE CONCERNING THE INTENT, PLACEMENT, OR LIMITS OF DIMENSIONS OR GRADES NECESSARY FOR THE CONSTRUCTION OF THIS PROJECT.
17. CONTRACTOR SHALL BE RESPONSIBLE FOR ACQUIRING ALL PERMITS, TESTS, APPROVALS AND ACCEPTANCES REQUIRED TO COMPLETE CONSTRUCTION OF THIS PROJECT.
18. THE CONTRACTOR SHALL BE RESPONSIBLE FOR ALL COORDINATION BETWEEN HIMSELF AND OTHER CONTRACTORS AND UTILITIES IN THE VICINITY OF THE PROJECT. THIS INCLUDES GAS, WATER, WASTEWATER, ELECTRICAL, TELEPHONE, CABLE TV AND STREET DRAINAGE WORK. ONCE THE CONTRACTOR BECOMES AWARE OF A POSSIBLE CONFLICT, IT IS THE CONTRACTOR'S RESPONSIBILITY TO NOTIFY THE ENGINEER WITHIN TWENTY-FOUR (24) HOURS.
19. THE CONTRACTOR MUST OBTAIN A BULK WATER PERMIT OR PURCHASE AND INSTALL A WATER METER FOR ALL WATER USED DURING CONSTRUCTION. A COPY OF THIS PERMIT MUST BE CARRIED AT ALL TIMES BY ALL WHO USE WATER.
20. CONTRACTOR WILL BE RESPONSIBLE FOR KEEPING ROADS AND DRIVES ADJACENT TO AND NEAR THE SITE FREE FROM SOIL, SEDIMENT AND DEBRIS. CONTRACTOR WILL NOT REMOVE SOIL, SEDIMENT OR DEBRIS FROM ANY AREA OR VEHICLE BY MEANS OF WATER. ONLY SHOVELING AND SWEEPING WILL BE ALLOWED. CONTRACTOR WILL BE RESPONSIBLE FOR DUST CONTROL FROM THE SITE.
21. THE CITY OF LEANDER SHALL NOT BE PETITIONED FOR ACCEPTANCE UNTIL ALL NECESSARY EASEMENT DOCUMENTS HAVE BEEN SIGNED AND RECORDED.
22. AN ENGINEER'S CONCURRENCE LETTER AND RECORD DRAWINGS SHALL BE SUBMITTED TO THE PLANNING DEPARTMENT UPON COMPLETION OF SITE INSPECTION PRIOR TO THE ISSUANCE OF CERTIFICATE OF COMPLETION. THE ENGINEER AND CONTRACTOR SHALL VERIFY THAT ALL FINAL REVISIONS AND CHANGES HAVE BEEN MADE TO THE DIGITAL COPY PRIOR TO CITY SUBMITTAL. RECORD CONSTRUCTION DRAWINGS, INCLUDING ROADWAY AND ALL UTILITIES SHALL BE PROVIDED TO THE CITY IN DIGITAL FORMAT AS AUTOCAD ".DWG" FILES, MICROSTATION ".DGN" FILES OR ESRI ".SHP" FILES ON CD ROM. LINE WEIGHTS, LINE TYPES AND TEXT SIZE SHALL BE SUCH THAT IF HALF-SIZE PRINTS (11"X17") WERE PRODUCED, THE PLANS WOULD STILL BE LEGIBLE. ALL REQUIRED DIGITAL FILES SHALL CONTAIN A MINIMUM OF TWO CONTROL POINTS REFERENCED TO THE STATE PLANE GRID COORDINATE SYSTEM - TEXAS CENTRAL ZONE (4203), IN US FEET AND SHALL INCLUDE ROTATION INFORMATION AND SCALE FACTOR REQUIRED TO REDUCE SURFACE COORDINATES TO GRID COORDINATES IN US FEET
23. THE SITE IS NOT LOCATED WITHIN THE 100-YEAR FLOODPLAIN.
24. THE EXISTING MERRITT LEGACY DRIVEWAY, LOCATED SOUTHWEST OF THE PROPERTY ALONG SONNY DRIVE, AND THE PROPOSED LIVEOAK PRESBYTERIAN CHURCH DRIVEWAY, LOCATED ON THE OPPOSITE SIDE OF SONNY DRIVE, WERE DIGITIZED FROM THE LIVEOAK PRESBYTERIAN CHURCH EROSION-SEDIMENTATION CONTROL & TREE PROTECTION PLAN BY CUNNINGHAM | ALLEN, INC., SEALED FEBRUARY 10, 2015.

STREET AND DRAINAGE NOTES

1. ALL SIDEWALKS SHALL COMPLY WITH THE AMERICANS WITH DISABILITIES ACT. THE CITY OF LEANDER HAS NOT REVIEWED THESE PLANS FOR COMPLIANCE WITH THE AMERICANS WITH DISABILITIES ACT, OR ANY OTHER ACCESSIBILITY LEGISLATION, AND DOES NOT WARRANTY OR APPROVE THESE PLANS FOR ANY ACCESSIBILITY STANDARDS.
2. CONTRACTOR SHALL PROVIDE QUALITY TESTING FOR ALL INFRASTRUCTURES TO BE ACCEPTED AND MAINTAINED BY THE CITY OF LEANDER AFTER COMPLETION. THE CONTRACTOR SHALL NOTIFY THE CITY OF LEANDER ENGINEERING DEPARTMENT AT 528-2700 NO LESS THAN 48 HOURS PRIOR TO ANY TESTING.
3. BACKFILL BEHIND THE CURB SHALL BE COMPACTED TO OBTAIN A MINIMUM OF 95% MAXIMUM DENSITY TO WITHIN 4" OF TOP OF CURB. MATERIAL USED SHALL BE PRIMARILY GRANULAR WITH NO ROCKS LARGER THAN 6" IN THE GREATEST DIMENSION. THE REMAINING 4" SHALL BE CLEAN TOPSOIL FREE FROM ALL CLODS AND SUITABLE FOR SUSTAINING PLANT LIFE
4. A MINIMUM OF 4" OF TOPSOIL SHALL BE PLACED BETWEEN THE CURB AND RIGHT-OF-WAY AND IN ALL DRAINAGE CHANNELS EXCEPT ROCK
5. DEPTH OF COVER FOR ALL CROSSINGS UNDER PAVEMENT, INCLUDING GAS, ELECTRIC TELEPHONE, CABLE TV, ETC., SHALL BE A MINIMUM OF 36" BELOW SUBGRADE
6. STREET RIGHT-OF-WAY SHALL BE GRADED AT A SLOPE OF ¼" PER FOOT TOWARD THE CURB UNLESS OTHERWISE INDICATED. HOWEVER, IN NO CASE SHALL THE WIDTH OF RIGHT-OF-WAY AT ¼" PER FOOT SLOPE BE LESS THAN 10 FEET UNLESS A SPECIFIC REQUEST FOR AN ALTERNATE GRADING SCHEME IS MADE TO AND ACCEPTED BY THE CITY OF LEANDER PUBLIC WORKS DEPARTMENT.
7. BARRICADES BUILT TO THE CITY OF LEANDER STANDARDS SHALL BE ERECTED ON ALL DEAD-END STREETS AND AS NECESSARY DURING CONSTRUCTION TO MAINTAIN JOB AND PUBLIC SAFETY.
8. ALL REINFORCED CONCRETE PIPE SHALL BE MINIMUM CLASS III.
9. THE GEOTECHNICAL ENGINEER SHALL INSPECT THE SUBGRADE FOR COMPLIANCE WITH THE DESIGN ASSUMPTIONS MADE DURING PREPARATION OF THE SOILS REPORT. ANY ADJUSTMENTS THAT ARE REQUIRED SHALL BE MADE THROUGH REVISIONS OF THE CONSTRUCTION PLANS.
10. THE CONTRACTOR IS TO NOTIFY THE CITY 48 HOURS PRIOR TO THE FOLLOWING TESTING: PROOF ROLLING SUB-GRADE, FINAL BASE IN-PLACE DENSITY TESTING, AND ASPHALT CORES. ALL OF THIS TESTING MUST BE WITNESSED BY A CITY OF LEANDER REPRESENTATIVE.
11. A CURB LAYDOWN IS REQUIRED AT ALL POINTS WHERE THE PROPOSED SIDEWALK INTERSECTS THE CURB.
12. ALL MACHINE-LAID CURB SHALL HAVE EXPANSION JOINTS AT 40' INTERVALS.
13. ALL STRIPING, WITH THE EXCEPTION OF STOP BARS, IS TO BE TYPE II (WATER BASED). STOP BARS REQUIRE TYPE I THERMOPLASTIC
14. MANHOLE FRAMES, COVERS, VALVES, CLEAN-OUTS, ETC. SHALL BE RAISED TO GRADE PRIOR TO FINAL PAVEMENT CONSTRUCTION.
15. CONTRACTOR SHALL NOTIFY THE LEANDER ENGINEERING DEPARTMENT AT 528-2700 AT LEAST 48 HOURS PRIOR TO THE INSTALLATION OF ANY DRAINAGE FACILITY WITHIN A DRAINAGE EASEMENT OR STREET ROW. THE METHOD OF PLACEMENT AND COMPACTION OF BACKFILL IN THE CITY'S ROW MUST BE APPROVED PRIOR TO THE START OF BACKFILL OPERATIONS.
16. SECURE INLET COVERS TO INLETS WITH CHAINS
17. A STOP BAR SHALL BE PLACED AT ALL STOP SIGN LOCATIONS.
18. A MINIMUM OF SEVEN DAYS OF CURE TIME IS REQUIRED FOR HMAC PRIOR TO THE INTRODUCTION OF VEHICULAR TRAFFIC TO ANY STREETS.

BENCHMARK NOTES

1. THE DISTANCES SHOWN IN THIS DRAWING SET ARE IN SURFACE UNITS.
2. BASIS OF BEARINGS IS GRID NORTH FOR TEXAS STATE PLANE CENTRAL ZONE, NAD83 (2011) EPOCH 2010.
3. ELEVATIONS ARE BASED ON NAD83 (2011) EPOCH 2010 UTILIZING GEOID 2012A.

PARCEL INFORMATION

1. PARCEL LINES AND OWNERSHIP INFORMATION PROVIDED BY WILLIAMSON COUNTY CENTRAL APPRAISAL DISTRICT AND THE 2014 CERTIFIED ROLE. PARCEL BOUNDARIES ARE NOT DEEMED SURVEY ACCURATE.

SEQUENCE OF CONSTRUCTION | PROPERTY OWNER NOTIFICATION-COORDINATION

THE FOLLOWING RECOMMENDED SEQUENCE OF CONSTRUCTION SHALL BE FOLLOWED FOR EACH PHASE OF CONSTRUCTION WITHIN THE LIMITS OF CONSTRUCTION. SEQUENCE PER PHASE MAY BE MODIFIED BY CONTRACTOR WITH APPROVAL BY CITY INSPECTOR AND/OR DESIGN CONSULTANT.

1. TEMPORARY EROSION CONTROLS AND TREE PROTECTION TO BE INSTALLED AS INDICATED ON THE APPROVED SITE DEVELOPMENT PLANS.
2. CONTRACTOR MUST CONTACT ALL GOVERNING BODIES TO SCHEDULD A PECONSTRUCTION COORDINATION MEETING TO BE HELD ON SITE
3. TEMPORARY EROSION CONTROLS WILL BE REVISED, IF NEEDED, TO COMPLY WITH OWNER'S/INSPECTORS' DIRECTIVES.
4. TEMPORARY CONTROLS TO BE INSPECTED AND MAINTAINED WEEKLY AND PRIOR TO ANTICIPATED RAINFALL EVENTS, AND AFTER RAINFALL EVENTS, AS NEEDED.
5. PERFORM DEMOLITION AND REMOVAL OF EXISTING SIDEWALKS, CURBS, RAMPS, ETC. NOTE: REFER DEMOLITION, EROSION AND SEDIMENTATION PLAN.
6. BACKFILL AND SUBGRADE PREPARATION AS REQUIRED.
7. INSTALL ELECTRIC CONDUIT, SLEEVING, OTHER APPURTENANCES.
8. INSTALL CURBS, CURB/GUTTER, CURB RETURNS, GUARD/HANDRAIL FOUNDATIONS, DRIVEWAYS, ETC.
9. INSTALL CONCRETE WALKWAYS, FOOTINGS AND CONCRETE BASES FOR PAVERS
10. INSTALL PAVER, RAMPS, CONSTRUCT VERTICAL WALLS, MONUMENTS.
11. INSTALL GUARDRAILS AND HANDRAILS.
12. INSTALL IN-GROUND LIGHT FIXTURES AND FLAG POLES
13. SEAL ALL EXPANSION JOINTS, CURB/ASPHALT JOINTS, HOT MIX PATCH AS REQUIRED, ETC.
14. REMOVE TREE PROTECTION FENCING.
15. INSTALL LANDSCAPING PER LANDSCAPE PLANS
16. RE-VEGETATE DISTURBED AREAS AND MULCH TREE WELLS.
17. REMOVE TEMPORARY EROSION CONTROLS UPON FINAL ACCEPTANCE OF RE-VEGATION BY OWNER/LANDSCAPE ARCHITECT.

ACCESSIBLE WALKWAY NOTES

1. ALL WALKWAYS ARE DESIGNED AND MUST BE CONSTRUCTED TO COMPLY WITH THE 2012 TEXAS ACCESSIBILITY STANDARDS (TAS) OF THE ARCHITECTURAL BARRIERS ACT, ARTICLE 902, TEXAS CIVIL STATUES. AN ACCESSIBILITY INSPECTION WILL BE REQUIRED AT THE END OF PROJECT CONSTRUCTION FOR COMPLIANCE WITH THE STANDARD AND AS REGULATED BY THE TEXAS DEPARTMENT OF LICENSING AND REGULATION (TDLR).
2. BASE BID SHALL INCLUDED ALL EARTHWORK NECESSARY TO ESTABLISH THE FINISHED GRADES SHOWN ON THE PLANS. NO SEPARATE PAYMENT WILL BE MADE.
3. CROSS SLOPES OF WALKWAYS SHALL NOT EXCEED A GRADIENT OF 1.50% (0.15 FOOT RISE IN 10.00 FEET OR RUN).
4. LONGITUNDIAL SLOPES OF WALKWAYS SHALL NO EXCEED A GRADIENT OF 4.50% (0.45 FOOT RISE IN 10.00 FEET OF RUN).
5. WHERE A WALKWAY INTERSECTS ANOTHER WALKWAY, SLAB OR OTHER STRUCTURE, THE CROSS SLOPE AT THE INTERSECTION SHALL NOT EXCEED 1.50% IN ALL DIRECTIONS, NO EXCEPTION.
6. CURB RAMPS SHALL NOT EXCEED 8.33% (0.5 FOOT RISE IN 6.00 FEET OF RUN).
7. RAMPED AREAS SHALL NOT EXCEED 8.33% (0.5 FOOT RISE IN 6.00 FEET OF RUN) WITH A MAX. CROSSSLOPE OF 1.5% (0.15 FOOT RISE IN 10.00 FEET RUN).
8. NO CHANGE IN LEVEL GREATER THAN 1/2 IN. WILL BE ACCEPTED.

CONSTRUCTION INSPECTION, MEETINGS, SUBMITTALS AND TESTING

1. THE CITY OF LEANDER WILL PROVIDE THE DAILY ON-SITE CONSTRUCTION REPRESENTATION FOR THIS PROJECT.
2. PRE-CONSTRUCTION CONFERENCE: PRIOR TO BEGINNING WORK ON THE PROJECT AND SOON AFTER THE AWARD OF THE CONTRACT, A CONFERENCE WILL BE HELD AMONG THE REPRESENTATIVES OF THE CITY OF LEANDER, THE DESIGN CONSULTANTS, THE CONTRACTOR AND ANY SUBCONTRACTOR THAT WILL BE INVOLVED IN THE WORK. AT THAT TIME, THE CONTRACTOR SHALL SUBMIT A TENTATIVE CONSTRUCTION SCHEDULE. THIS CONFERENCE WILL MORE COMPLETELY ESTABLISH THE SEQUENCE OF WORK TO BE FOLLOWED AND ESTABLISH THE ESTIMATED PROGRESS SCHEDULE FOR COMPLETION OF THE VARIOUS TASKS. WHEN APPLICABLE, THE PRE-CONSTRUCTION CONFERENCE WILL BE HELD ONLY AFTER INSTALLATION OF THE EROSION AND SEDIMENTATION CONTROLS.
3. CONSTRUCTION PROGRESS MEETING DATES, TIMES, LOCATIONS AND FREQUENCY WILL BE ESTABLISHED AT THE PRE-CONSTRUCTION MEETING AS AGREED UPON BY ALL PARTIES INVOLVED.
4. SUBMITTALS: THE CONTRACTOR SHALL BE RESPONSIBLE FOR FURNISHING THE DESIGN CONSULTANT SUBMITTALS AND SAMPLES PRODUCTS AS SPECIFIED OF ALL MATERIALS TO BE USED ON THE PROJECT. SUBMITTALS SHALL BE PROVIDED ON A OFFICIAL LETTER HEAD/TRANSMITTAL FROM THE GENERAL CONTRACTOR AND NUMBERED IN PDF DIGITAL FORMAT AND EMAILED TO PRIME DESIGN CONSULTANT. PRODUCT MANUFACTURER, TECHNICAL DATA IF DIFFERENT FROM SOURCE; CONTENT OF PRODUCT; AMOUNT OF EACH INGREDIENT IN THE PRODUCT, AND MANUFACTURER'S DIRECTIONS AS TO USE AND APPLICATION OF THE PRODUCT, IF APPLICABLE, SHALL BE PROVIDED. PAINT/FINISHING PRODUCT SAMPLE, ROCK SAMPLE, CAST STONE SAMPLES, ETC. SHALL BE TRACTED SAME AS MATERIAL SUBMITTALS. ANY COSTS ASSOCIATED WITH ANY SAMPLING AND TESTING SHALL BE THE RESPONSIBILITY OF THE CONTRACTOR. THESE COSTS SHALL BE CONSIDERED AS INCIDENTAL AND THE CONTRACTOR WILL NOT BE ENTITLED TO ANY ADDITIONAL COMPENSATION.
5. TESTING:
   A. THE OWNER, THE CITY OF LEANDER, WILL PAY ALL THE CHARGES OF TESTING LABORATORIES FOR SERVICES IN CONNECTION WITH IN PLACE FIELD DENSITIES, CONCRETE CYLINDERS TESTING, HMAC DENSITY TESTS AND ANY IN PLACE TEST REQUIRED FOR QUALITY ASSURANCE. RETESTING AFTER FAILURE OF IN PLACE TESTS SHALL BE AT THE EXPENSE OF THE CONTRACTOR.
   B. THE CONTRACTOR SHALL BE RESPONSIBLE FOR AND PAY FOR ALL CHARGES OF TESTING LABORATORIES FOR SERVICES IN CONNECTION WITH INITIAL TESTS MADE ON ALL IMPORTED MATERIALS TO THE PROJECT SITES INCLUDING BUT NOT LIMITED TO EMBEDMENT MATERIALS, FILL MATERIAL, BACKFILL MATERIAL, SELECT MATERIAL, CRUSHED LIMESTONE BASE, SUBBASE, CONCRETE, STEEL, WOOD FORMS, LIQUID ASPHALT, AGGREGATE, WATER, CEMENT, CURING, COMPOUND, SEALANTS, ETC. THE TESTS FOR WHICH THE CONTRACTOR WILL TYPICALLY BE RESPONSIBLE ARE ATTERBERG LIMITS, SIEVE ANALYSIS, PLASTICITY INDICES, MIX DESIGN, CALIFORNIA BEARING RATIOS, PROCTORS (MOISTURE DENSITY CURVES) AND ALL TESTS REQUIRED BY THE SPECIFICATIONS THAT PROVE THE MATERIAL BROUGHT TO THE PROJECT SITES MEETS OR EXCEEDS THE SPECIFICATIONS AND CONTRACT DOCUMENTS.

CONSTRUCTION LAYOUT/DIMENSION CONTROL NOTES

1. PRIOR TO COMMENCING CONSTRUCTION THE CONTRACTOR SHALL BE PROVIDED A DISK CONTAINING THE SURVEY AND DESIGN FILES FOR THE PROJECT FROM BAKER-AICKLEN & ASSOCIATES, INC. FOR LAYOUT PURPOSES.
2. PRIOR TO BEGINNING CONSTRUCTION, THE CONTRACTOR SHALL EMPLOY AN INDEPENDENT REGISTERED PROFESSIONAL LAND SURVEYOR TO SET CONTROL AND ELEVATIONS FOR THE ENTIRE PROJECT. THE SURVEYOR SHALL REVIEW THE PLANS THOROUGHLY AND POINT OUR ANY KNOWN OR DISCOVERED DISCREPANCIES TO THE DESIGN CONSULTANT. PRIOR TO THE COMMENCEMENT OF CONSTRUCTION, THE SURVEYOR SHALL RUN A TRAVERSE LOOP ON THE SITE. THE SURVEYOR SHALL VERIFY AND CONFIRM IN WRITING TO THE CONTRACTOR THAT THE BENCH MARKS ARE CORRECT WITH REGARD TO THE DIFFERENCE IN THE THEIR ELEVATIONS AND WITH REGARD TO THE ELEVATIONS OF AT LEAST FOUR CHECKPOINTS EVENLY DISTRIBUTED ON THE SITE FOR WHICH ELEVATIONS ARE GIVEN. CHECKPOINTS MAY BE ANY MANMADE OR NATURAL FEATURE THAT CAN BE READILY IDENTIFIED AND MEASURED.
3. CONTRACTOR IS RESPONSIBLE FOR LOCATING, PROTECTING AND MAINTAINING PERMANENT AND
4. USE DIMENSIONAL INFORMATION PROVIDED ON THE PLANS. DO NOT SCALE DRAWINGS. WRITTEN DIMENSIONS SHALL PREVAIL.
5. THE PLANS FOR THIS PROJECT SHOW PROPOSED ELEVATIONS, SLOPES AND DIMENSIONS THAT ARE INTENDED FOR ACTUAL PLACEMENT. THERE MAY BE SOME INSTANCES WHERE EXISTING CONDITIONS MAKE IT IMPRACTICAL TO ACHIEVE THE IDEAL. IN THOSE INSTANCES, THE DESIGN CONSULTANT / CITY INSPECTOR WILL ASSIST THE CONTRACTOR IN MAKING PROPER FIELD CHANGES TO ACCOMMODATE SUCH CONDITIONS .

SUPPLEMENTAL UTILITY NOTES

1. THE CONTRACTOR SHALL NOT ASSUME THAT UTILITIES ARE PRECISELY LOCATED. UTILITIES ARE SHOWN TO HELP MAKE THE CONTRACTOR AWARE OF THEIR EXISTENCE. THIS MEASURE IS TAKEN TO HELP PROTECT THE INVESTEMENTS AND SERVICES OF THE OWNERS OF THE UTILITIES AND THEIR CUSTOMERS. CONTRACTOR SHALL CALL '811' FOR HELP IN LOCATING UTILITIES.

2. IT IS THE CONTRACTOR'S RESPONSIBILITY TO DETEMINE AND VERIFY THE EXACT LOCATION AND DEPTH OF ALL EXISTING UTILITIES PRIOR TO PROCEEDING WITH CONSTRUCTION. THE CONTRACTYOR SHALL ASCERTAIN WHETHER ANY ADDITIONAL UTILITIES OR FACILITIES, OTHER THAN THOSE SHOWN ON THE PLANS, MAY BE PRESENT ON THE SITE OF THE WORK.

3. PRIOR TO PROCEEDING WITH CONSTRUCTION, THE CONTRACTOR SHALL NOTIFY THE OWNER AND/OR DESIGN CONSULTANT IF CONFLICTS OR POTENTIAL CONFLICTS OCCUR BETWEEN THE EXISTING UTILITIES AND PROPOSED CONSTRUCTION.

4. PRIOR TO PROCEEDING WITH CONSTRUCTION, THE CONTRACTOR SHALL COORDINATE THE AFFECTED PARTS OF THE UTILITIES. IT IS THE RESPONSIBILITY OF THE CONTRACTOR TO PRESERVE AND PROTECT ALL UTILITIES.

5. THE CONTRACTOR WILL IMMEDIATELY NOTIFY THE UTILITY OWNER AND MAKE RESTITUTION FOR ANY UTILITY THAT IS DAMAGED BY THE CONTRACTOR IN THE COURSE OF THE WORK.

6. THE CONTRACTOR SHALL CONTACT THE OWNER TO LOCATE EXISTING IRRIGATION PIPE AND COMMUNICATION LINES THAT MAY EXISTING WITHIN THE SITE OF THE WORK.

811. Know what's below. Call before you dig.

CAUTION - ELECTRICITY PRESENT

THE GENERAL CONTRACTOR AND ALL SUBCONTRACTORS THAT ENTER OR WORK ON THIS PROJECT ARE RESPONSIBLE FOR LOCATING, USING 811 OR THE ELECTRIC UTILITIES THEMSELVES, ALL OVERHEAD AND UNDERGROUND ELECTRICAL OF ANY NATURE AND FOR SAFEGUARDING ALL PERSONNEL ON THIS PROJECT, INCLUDING ANY OFF-SITE WORK AREAS SHOWN ON THE PLAN, FROM ANY INTERFERENCE WITH THE ELECTRIC LINES OR FROM DAMAGING, DIGGING UP OR UNCOVERING THE ELECTRIC LINES, GETTING A LADDER IN HARMS WAY OR ANY OTHER ACTIVITY OF ANY NATURE THAT COULD HARM ANY INDIVIDUAL IN ANY MANNER. THIS RESPONSIBILITY HEREBY REMOVES BAKER-AICKLEN & ASSOCIATES AND THE OWNER FROM ANY LIABILITY OF ANY NATURE.

BAKER-AICKLEN & ASSOCIATES, INC.
ENGINEERS | SURVEYORS | GIS | PLANNERS | LANDSCAPE ARCHITECTS
507 WEST LIBERTY AVENUE
ROUND ROCK TEXAS 78664
(512) 244-9620
ENGINEERING FIRM # F-45
SURVEY FIRM #100231-0
TBAE# 1787
ROUND ROCK - CEDAR PARK

DESIGNED: BH/GF DRAWN: BH/GF REVIEWED: BH

REGISTERED LANDSCAPE ARCHITECT STATE OF TEXAS
BRANDON J. HAY
2756
04/15/15

NO.	DATE	REVISIONS	RECOM'D
NO.1	4.15.15	SECOND PERMIT REVIEW SUBMITTAL	CITY
NO.2	4.29.15	THIRD PERMIT REVIEW SUBMITTAL	CITY

CLIENT | OWNER
CITY OF LEANDER
TEXAS

PROJECT
VETERAN'S PARK

SHEET TITLE
NOTES SHEET

PROJECT No.
0674-2-017

SHEET No. N-1
2 OF 27

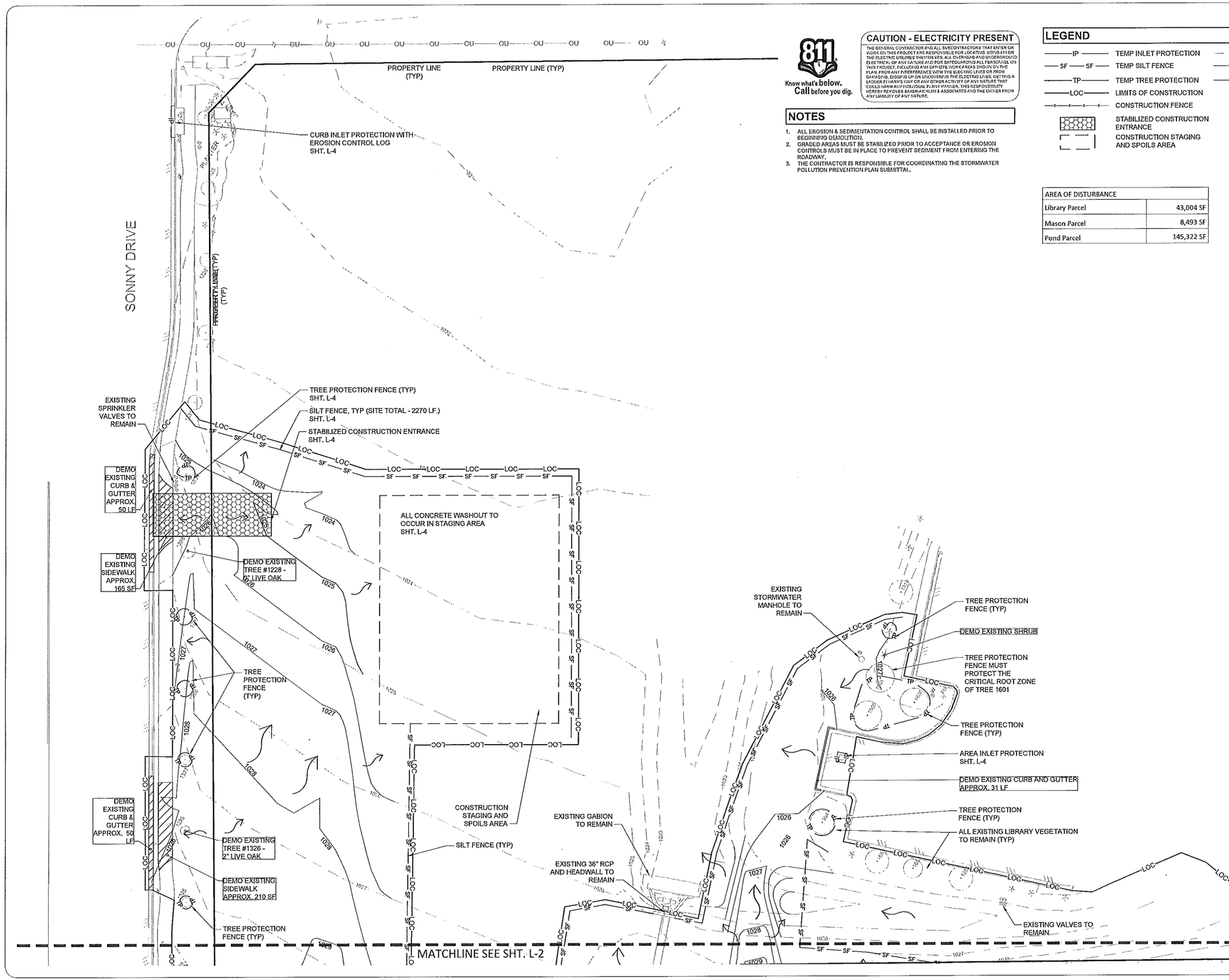

Know what's below. Call before you dig.

CAUTION - ELECTRICITY PRESENT

THE GENERAL CONTRACTOR AND ALL SUBCONTRACTORS THAT ENTER OR WORK ON THIS PROJECT ARE RESPONSIBLE FOR LOCATING, USING 811 OR THE ELECTRIC UTILITIES THEMSELVES, ALL OVERHEAD AND UNDERGROUND ELECTRICAL OF ANY NATURE AND FOR SAFEGUARDING ALL PERSONNEL ON THIS PROJECT, INCLUDING ANY OFF-SITE WORK AREAS SHOWN ON THE PLAN, FROM ANY INTERFERENCE WITH THE ELECTRIC LINES OR FROM DAMAGING, DIGGING UP OR UNCOVERING THE ELECTRIC LINES, GETTING A LADDER IN HANDY WAY OR ANY OTHER ACTIVITY OF ANY NATURE THAT COULD HAVE ANY INTERFERENCE IN ANY MANNER. THIS RESPONSIBILITY HEREBY REMOVES BAKER-AICKLEN & ASSOCIATES AND THE OWNER FROM ANY LIABILITY OF ANY NATURE.

NOTES

1. ALL EROSION & SEDIMENTATION CONTROL SHALL BE INSTALLED PRIOR TO BEGINNING DEMOLITION.
2. GRADED AREAS MUST BE STABILIZED PRIOR TO ACCEPTANCE OR EROSION CONTROLS MUST BE IN PLACE TO PREVENT SEDIMENT FROM ENTERING THE ROADWAY.
3. THE CONTRACTOR IS RESPONSIBLE FOR COORDINATING THE STORMWATER POLLUTION PREVENTION PLAN SUBMITTAL.

LEGEND

—IP—	TEMP INLET PROTECTION
—SF—SF—	TEMP SILT FENCE
—TP—	TEMP TREE PROTECTION
—LOC—	LIMITS OF CONSTRUCTION
—x—x—x—	CONSTRUCTION FENCE
	STABILIZED CONSTRUCTION ENTRANCE
	CONSTRUCTION STAGING AND SPOILS AREA
—850—	EXISTING CONTOURS
	PROPOSED INDEX CONTOURS
	PROPOSED INTERVAL CONTOURS
	PROPOSED FLOW ARROWS

AREA OF DISTURBANCE	
Library Parcel	43,004 SF
Mason Parcel	8,493 SF
Pond Parcel	145,322 SF

TAG NO	TREE DESCRIPTION
1105	3" LIVE OAK
1106	3" LIVE OAK
1226	3" LIVE OAK
1227	3" LIVE OAK
1228	3" LIVE OAK
1230	3" LIVE OAK
1231	3" LIVE OAK
1235	3" LIVE OAK
1236	3" LIVE OAK
1319	6" CYPRESS
1324	2" LIVE OAK
1325	2" LIVE OAK
1326	2" LIVE OAK
1327	2" LIVE OAK
1599	6" CEDAR ELM
1600	6" LIVE OAK
1601	6" REDBUD
1641	5" CEDAR ELM
1651	5" REDBUD
1652	4" REDBUD
1653	5" LIVE OAK
3154	13" WALNUT
3155	25" HACKBERRY
3161	16" WALNUT
3171	19" CHINABERRY
3177	21" CHINABERRY
3178	4" HACKBERRY
3179	4" HACKBERRY
3180	6" HACKBERRY
3181	2" HACKBERRY
3182	2" HACKBERRY
3183	2" HACKBERRY
3184	5" HACKBERRY
3185	2" HACKBERRY
3186	3" HACKBERRY
3187	3" HACKBERRY
3188	3" HACKBERRY
3189	5" HACKBERRY
3190	7" HACKBERRY
3191	11" WALNUT
3193	17" WALNUT

BAKER-AICKLEN & ASSOCIATES, INC.
507 WEST LIBERTY AVENUE
ROUND ROCK TEXAS 78664
512 244-9023
ENGINEERING | SURVEYING | LANDSCAPE ARCHITECTURE
SURVEYING FIRM # 10022310
TBAE# 1707
ROUND ROCK - CEDAR PARK

DESIGNED: BHGF | DRAWN: BHGF | REVIEWED: BH

NO.	DATE	REVISIONS
NO.1	4.15.15	SECOND PERMIT REVIEW SUBMITTAL
NO.2	4.29.15	THIRD PERMIT REVIEW SUBMITTAL
		CITY
		CITY
		RECORD

CLIENT | OWNER: CITY OF LEANDER TEXAS

PROJECT: VETERAN'S PARK

SHEET TITLE: DEMOLITION, EROSION & SEDIMENTATION CONTROL PLAN

PROJECT No. 0674-2-017

SHEET No. L-1

3 OF 27

LEGEND

—IP—	TEMP INLET PROTECTION
—SF—SF—	TEMP SILT FENCE
—TP—	TEMP TREE PROTECTION
—LOC—	LIMITS OF CONSTRUCTION
—x—x—x—	CONSTRUCTION FENCE
	STABILIZED CONSTRUCTION ENTRANCE
	CONSTRUCTION STAGING AND SPOILS AREA
—850—	EXISTING CONTOURS
	PROPOSED INDEX CONTOURS
	PROPOSED INTERVAL CONTOURS
	PROPOSED FLOW ARROWS

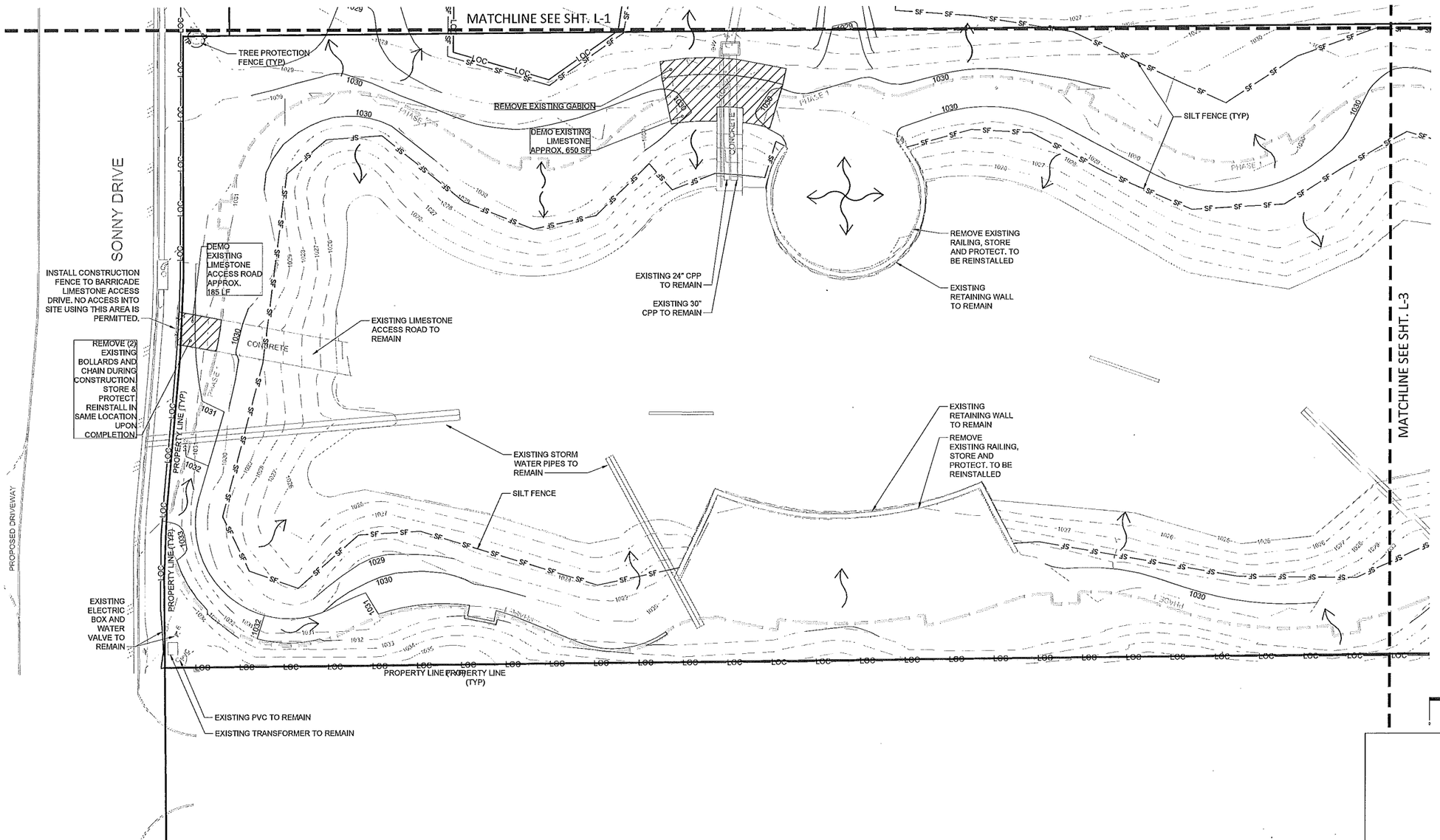

BAKER-AICKLEN & ASSOCIATES, INC.
ENGINEERING | SURVEYING | GIS | PLANNING | LANDSCAPE ARCHITECTS
ROUND ROCK - CEDAR PARK
507 WEST LIBERTY AVENUE
ROUND ROCK TEXAS 78664
(512) 244-9620
ENGINEERING FIRM # F-45
SURVEY FIRM # 10023110
TBAE# 17877

DESIGNED: BH/GF DRAWN: BH/GF REVIEWED: BH

REGISTERED LANDSCAPE ARCHITECT BRANDON J. HAY 2756 STATE OF TEXAS 04/15/15

NO.	DATE	REVISIONS	RECOM'D
NO.1	4.15.15	SECOND PERMIT REVIEW SUBMITTAL	CITY
NO.2	4.29.15	THIRD PERMIT REVIEW SUBMITTAL	CITY

CLIENT | OWNER: CITY OF LEANDER TEXAS

PROJECT: VETERAN'S PARK

SHEET TITLE: DEMOLITION, EROSION & SEDIMENTATION CONTROL PLAN

PROJECT No. 0674-2-017

SHEET No. L-2

4 OF 27

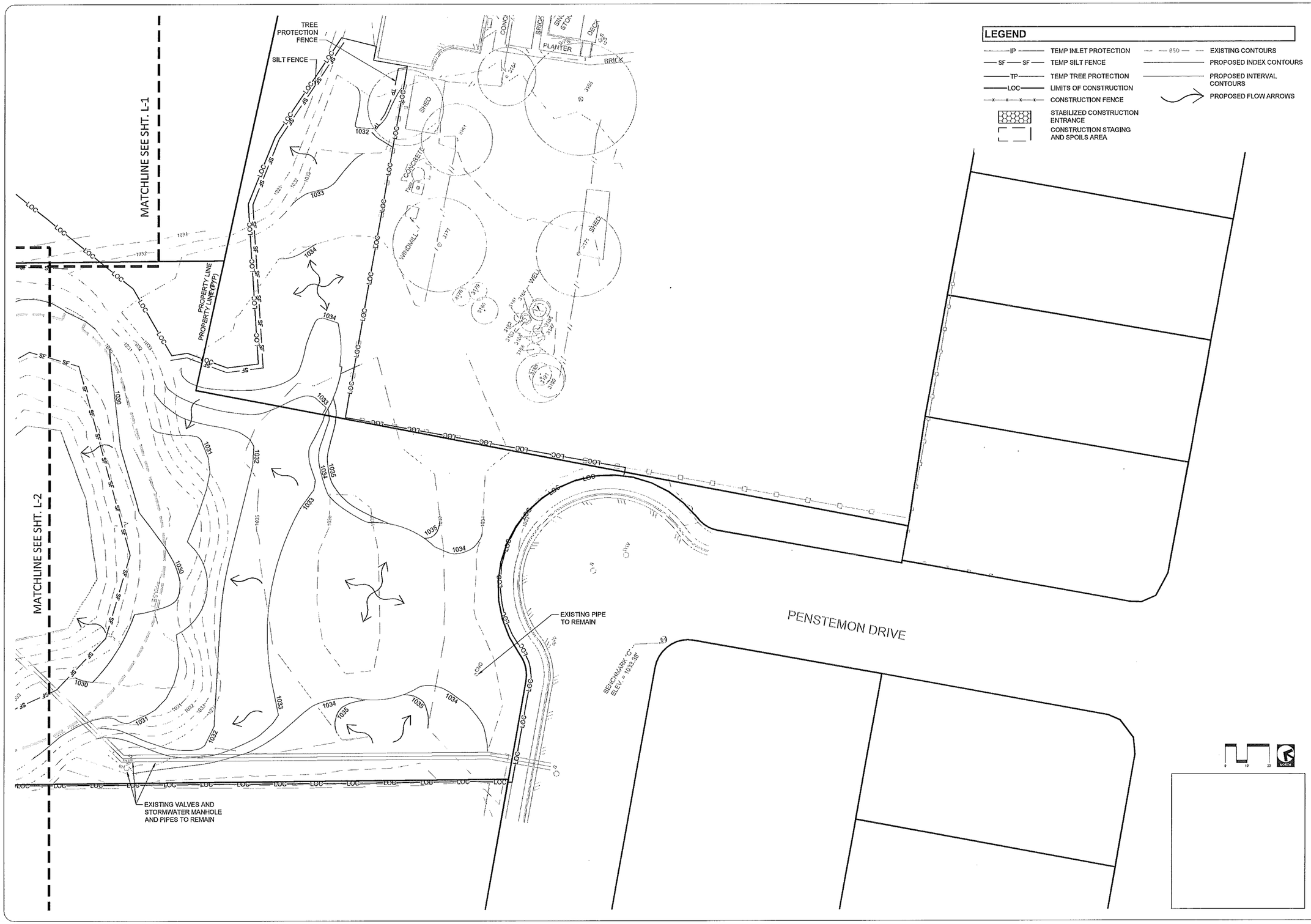

BAKER-AICKLEN & ASSOCIATES, INC.
ENGINEERS | SURVEYORS | PLANNERS | LANDSCAPE ARCHITECTS
ROUND ROCK - CEDAR PARK
507 WEST LIBERTY AVENUE
ROUND ROCK TEXAS 78664
(512) 244-9620
ENGINEERING FIRM # F-45
SURVEY FIRM # 10023 1-0
TBAE# 17877

DESIGNED: BH/GF DRAWN: BH/GF REVIEWED: BH

REGISTERED LANDSCAPE ARCHITECT BRANDON J. MAY 2758 TEXAS 04/15/15

NO.	DATE	REVISIONS	RECOM'D
NO.1	4.15.15	SECOND PERMIT REVIEW SUBMITTAL	CITY
NO.2	4.29.15	THIRD PERMIT REVIEW SUBMITTAL	CITY

CLIENT | OWNER
CITY OF LEANDER TEXAS

PROJECT
VETERAN'S PARK

SHEET TITLE
DEMOLITION, EROSION & SEDIMENTATION CONTROL PLAN

PROJECT No.
0674-2-017

SHEET No. L-3
5 OF 27

EROSION CONTROL NOTES

1. THE CONTRACTOR SHALL INSTALL EROSION/SEDIMENTATION CONTROLS AND TREE PROTECTIVE FENCING PRIOR TO ANY WORK (CLEARING, GRUBBING OR EXCAVATION)
2. THE CONTRACTOR IS REQUIRED TO INSPECT THE CONTROLS AND FENCES AT WEEKLY INTERVALS AND AFTER SIGNIFICANT RAINFALL EVENTS TO ENSURE THAT THEY ARE FUNCTIONING PROPERLY. THE PERSON(S) RESPONSIBLE FOR MAINTENANCE OF CONTROLS AND FENCES SHALL IMMEDIATELY MAKE ANY NECESSARY REPAIRS TO DAMAGED AREAS. SILT ACCUMULATION AT CONTROLS MUST BE REMOVED WHEN THE DEPTH REACHES SIX (6) INCHES.
3. THE TEMPORARY SPOILS DISPOSAL SITE IS TO BE SHOWN IN THE EROSION CONTROL MAP. THE DEPTH OF SPOIL WILL NOT EXCEED 10 FEET IN ANY AREA.
4. NO PERMANENT SPOILS DISPOSAL ON-SITE EXCEPT AS SHOWN ON THE PLANS.
5. ALL AREAS DISTURBED OR EXPOSED DURING CONSTRUCTION SHALL BE RESTORED WITH A MINIMUM OF 6 INCHES OF TOPSOIL
6. STABILIZED CONSTRUCTION ENTRANCE IS REQUIRED AT ALL POINTS WHERE CONSTRUCTION TRAFFIC IS EXITING THE PROJECT ONTO EXISTING PAVEMENT.

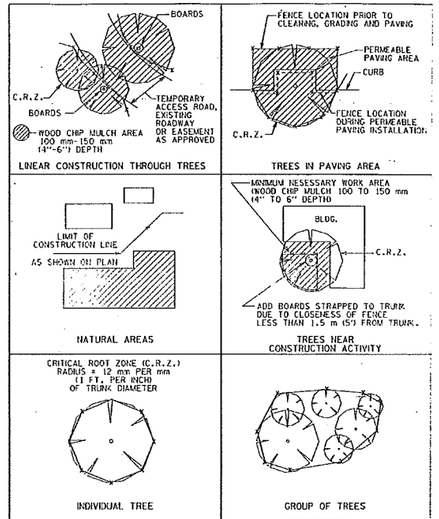

CITY OF AUSTIN
WATERSHED PROTECTION DEPARTMENT

TREE PROTECTION FENCE LOCATIONS

ADOPTED 11/19/99

THE ARCHITECT/ENGINEER ASSUMES RESPONSIBILITY FOR APPROPRIATE USE OF THIS STANDARD.

STANDARD NO. 610S-1

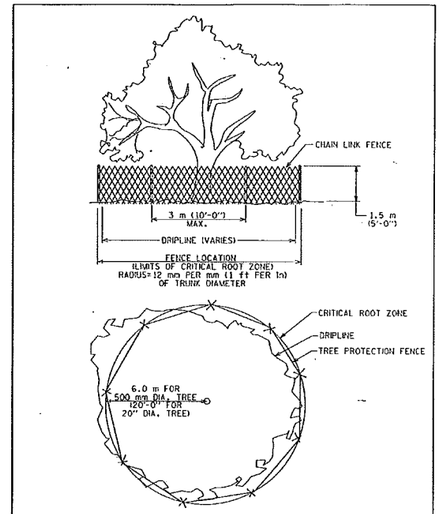

CITY OF AUSTIN
WATERSHED PROTECTION DEPARTMENT

TREE PROPTECTION FENCE
TYPE A - CHAIN LINK

ADOPTED 11/19/99

THE ARCHITECT/ENGINEER ASSUMES RESPONSIBILITY FOR APPROPRIATE USE OF THIS STANDARD.

STANDARD NO. 610S-2

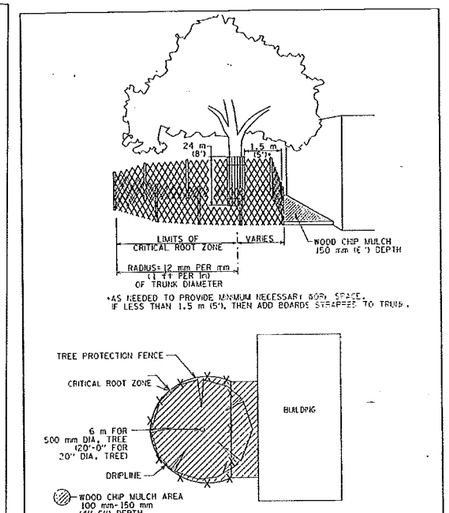

CITY OF AUSTIN
WATERSHED PROTECTION DEPARTMENT

TREE PROTECTION FENCE
MODIFIED TYPE A - CHAIN LINK

ADOPTED 11/19/99

THE ARCHITECT/ENGINEER ASSUMES RESPONSIBILITY FOR APPROPRIATE USE OF THIS STANDARD.

STANDARD NO. 610S-4

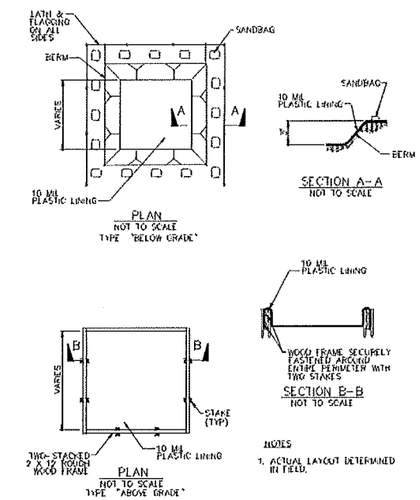

NOTES

1. ACTUAL LAYOUT DETERMINED IN FIELD.

CONCRETE WASHOUT AREA

SCALE: N.T.S.

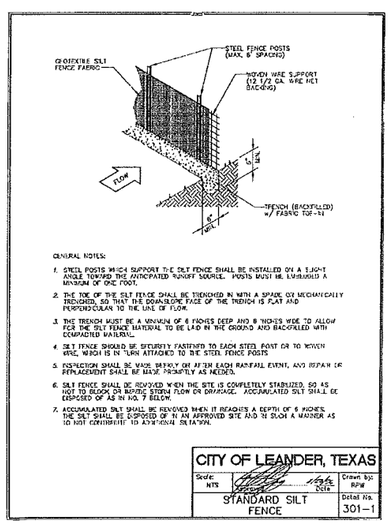

GENERAL NOTES:

1. STEEL POSTS WHICH SUPPORT THE SILT FENCE SHALL BE INSTALLED ON A SLIGHT ANGLE TOWARD THE ANTICIPATED RUNOFF SOURCE. POSTS MUST BE EMBEDDED A MINIMUM OF ONE FOOT.
2. THE TOE OF THE SILT FENCE SHALL BE TRENCHED IN WITH A SPADE OR MECHANICALLY TRENCHED, SO THAT THE DOWNSLOPE FACE OF THE TRENCH IS FLAT AND PERPENDICULAR TO THE LINE OF FLOW.
3. THE TRENCH MUST BE A MINIMUM OF 6 INCHES DEEP AND 6 INCHES WIDE TO ALLOW FOR THE SILT FENCE MATERIAL TO BE LAID IN THE GROUND AND BACKFILLED WITH COMPACTED MATERIAL.
4. SILT FENCE SHOULD BE SECURELY FASTENED TO EACH STEEL POST OR TO WOVEN WIRE, WHICH IS IN TURN ATTACHED TO THE STEEL FENCE POSTS
5. INSPECTION SHALL BE MADE WEEKLY OR AFTER EACH RAINFALL EVENT, AND REPAIR OR REPLACEMENT SHALL BE MADE PROMPTLY AS NEEDED.
6. SILT FENCE SHALL BE REMOVED WHEN THE SITE IS COMPLETELY STABILIZED, SO AS NOT TO BLOCK OR RESTRICT STORM FLOW OR DRAINAGE. ACCUMULATED SILT SHALL BE DISPOSED OF AS IN NO. 7 BELOW.
7. ACCUMULATED SILT SHALL BE REMOVED WHEN IT REACHES A DEPTH OF 6 INCHES. THE SILT SHALL BE DISPOSED OF IN AN APPROVED SITE AND IN SUCH A MANNER AS TO NOT CONTRIBUTE TO ADVERSE SITUATION.

CITY OF LEANDER, TEXAS

Scale: NTS | Date | Drawn by: RPW

STANDARD SILT FENCE | Detail No. 301-1

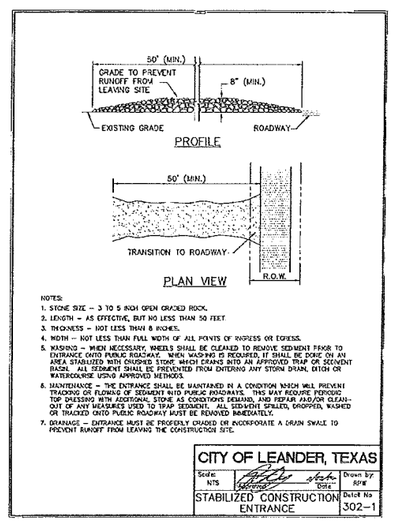

NOTES:

1. STONE SIZE – 3 TO 5 INCH OPEN CRACKED ROCK.
2. LENGTH – AS EFFECTIVE, BUT NO LESS THAN 50 FEET.
3. THICKNESS – NOT LESS THAN 8 INCHES.
4. WIDTH – NOT LESS THAN FULL WIDTH OF ALL POINTS OF INGRESS OR EGRESS.
5. WASHING – WHEN NECESSARY, WHEELS SHALL BE CLEANED TO REMOVE SEDIMENT PRIOR TO ENTRANCE ONTO PUBLIC ROADWAY. WHEN WASHING IS REQUIRED, IT SHALL BE DONE ON AN AREA STABILIZED WITH CRUSHED STONE WHICH DRAINS INTO AN APPROVED TRAP OR SEDIMENT BASIN. ALL SEDIMENT SHALL BE PREVENTED FROM ENTERING ANY STORM DRAIN, DITCH OR WATERCOURSE USING APPROVED METHODS.
6. MAINTENANCE – THE ENTRANCE SHALL BE MAINTAINED IN A CONDITION WHICH WILL PREVENT TRACKING OR FLOWING OF SEDIMENT INTO PUBLIC THOROUGHFARES. THIS MAY REQUIRE PERIODIC TOP DRESSING WITH ADDITIONAL STONE AS CONDITIONS DEMAND, AND REPAIR AND/OR CLEAN-OUT OF ANY MEASURES USED TO TRAP SEDIMENT. ALL SEDIMENT SPILLED, DROPPED, WASHED OR TRACKED ONTO PUBLIC ROADWAY MUST BE REMOVED IMMEDIATELY.
7. DRAINAGE – ENTRANCE MUST BE PROPERLY GRADED OR INCORPORATE A DRAIN SWALE TO PREVENT RUNOFF FROM LEAVING THE CONSTRUCTION SITE.

CITY OF LEANDER, TEXAS

Scale: NTS | Date | Drawn by: RPW

STABILIZED CONSTRUCTION ENTRANCE | Detail No. 302-1

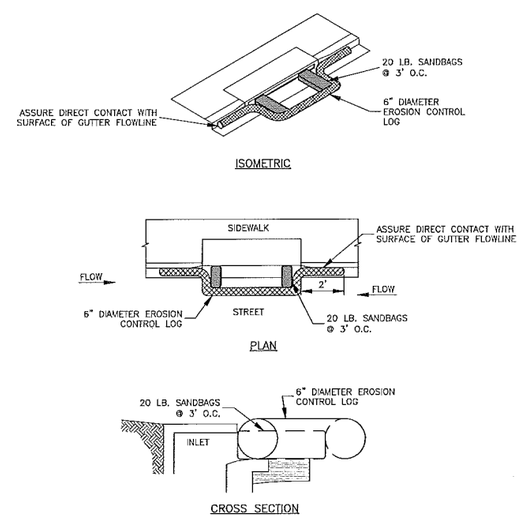

NOTES:

1. EROSION CONTROL LOG CONTAINMENT MESH SHALL BE 100% BIODEGRADABLE, PHOTODEGRADABLE OR RECYCLABLE; AND FILL MATERIAL SHALL CONSIST OF MULCH, ASPEN EXCELSIOR FIBERS, CHIPPED SITE VEGETATION, COCONUT FIBERS, 100% RECYCLABLE FIBERS, OR ANY OTHER ACCEPTABLE MATERIAL EXCLUDING STRAW AND HAY.
2. DAILY INSPECTION SHALL BE MADE BY THE CONTRACTOR AND SILT ACCUMULATION MUST BE REMOVED WHEN DEPTH REACHES 2".
3. CONTRACTOR SHALL MONITOR THE PERFORMANCE OF INLET PROTECTION DURING EACH RAINFALL EVENT AND IMMEDIATELY REMOVE THE INLET PROTECTIONS IF THE STORM WATER BEGINS TO OVERTOP THE CURB.
4. INLET PROTECTIONS SHALL BE REMOVED AS SOON AS THE SOURCE OF SEDIMENT IS STABILIZED.

CURB INLET PROTECTION WITH EROSION CONTROL LOG

SCALE: N.T.S.

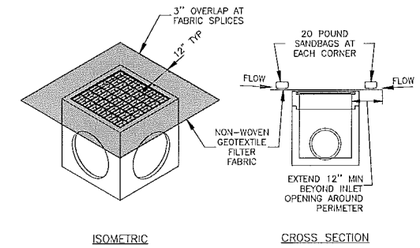

NOTES:

1. DAILY INSPECTION SHALL BE MADE BY THE CONTRACTOR AND SILT ACCUMULATION MUST BE REMOVED WHEN DEPTH REACHES 2".
2. CONTRACTOR SHALL MONITOR THE PERFORMANCE OF INLET PROTECTION DURING EACH RAINFALL EVENT AND IMMEDIATELY CLEAN THE INLET PROTECTION IF EXCESSIVE PONDING OCCURS.
3. INLET PROTECTIONS SHALL BE REMOVED AS SOON AS THE SOURCE OF SEDIMENT IS STABILIZED.

AREA INLET PROTECTION

SCALE: N.T.S.

BAKER-AICKLEN & ASSOCIATES, INC.
5517 WEST LIBERTY AVENUE
ROUND ROCK, TEXAS 78664
ENGINEERING FIRM # F-3400
SURVEYING FIRM # LS10023-10
TBAE # 1707
ENGINEERS | SURVEYORS | GIS | PLANNERS | LANDSCAPE ARCHITECTS
ROUND ROCK - CEDAR PARK

DESIGNED: BH/GF | DRAWN: BH/GF | REVIEWED: BH

REGISTERED LANDSCAPE ARCHITECT STATE OF TEXAS 2169 BRYAN HAY

NO.	DATE	REVISIONS		
NO.1	4.15.15	SECOND PERMIT REVIEW SUBMITTAL	CITY	
NO.2	4.29.15	THIRD PERMIT REVIEW SUBMITTAL	CITY	
				RECOMMD

CLIENT | OWNER: CITY OF LEANDER TEXAS

PROJECT: VETERAN'S PARK

SHEET TITLE: DEMOLITION, EROSION & SEDIMENTATION CONTROL DETAILS

PROJECT No. 0674-2-017

SHEET No. L-4

6 OF 27

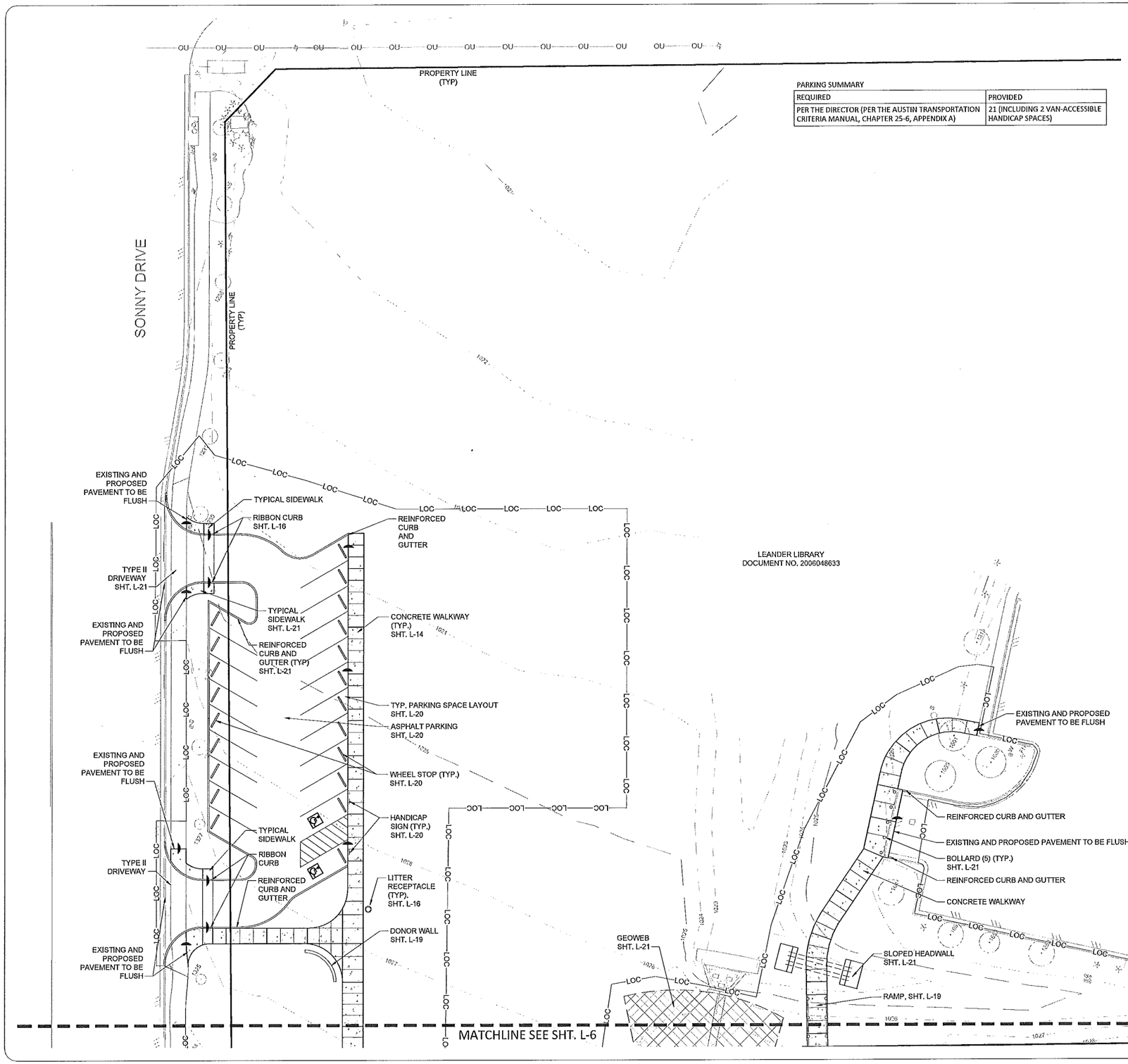

PARKING SUMMARY

REQUIRED	PROVIDED
PER THE DIRECTOR (PER THE AUSTIN TRANSPORTATION CRITERIA MANUAL, CHAPTER 25-6, APPENDIX A)	21 (INCLUDING 2 VAN-ACCESSIBLE HANDICAP SPACES)

LEGEND

- LIMITS OF CONSTRUCTION
- EXPANSION JOINT (EJ)
- EXPANSION JOINT IN CONCRETE PAVER BED
- CONTROL JOINT (CJ)
- CONCRETE CURB
- RIBBON CURB
- HAND RAIL
- FLUSH INDICATOR
- CONCRETE WALKWAY
- CONCRETE PAVERS
- DECOMPOSED GRANITE TRAIL
- EXISTING WIRE FENCE
- EXISTING WOOD FENCE
- EXISTING IRON FENCE

NOTES

1. HOURS OF OPERATION FOR THE GENERAL PUBLIC ARE RESTRICTED TO BETWEEN 7:00 A.M. AND 10:00 P.M. SUNDAY THROUGH THURSDAY, AND 7:00 A.M. TO 11:00 P.M. FRIDAY AND SATURDAY.
2. ALL SITE UTILITY LINES ARE PROPOSED TO BE LOCATED UNDERGROUND.
3. EXTERIOR LIGHTING SHALL BE SHIELDED SUCH THAT THE LIGHT SOURCE IS NOT DIRECTLY VISIBLE FROM THE PUBLIC ROW OR ADJACENT RESIDENTIAL DISTRICTS OR USES AT THE PROPERTY LINE. UNSHIELDED "WALL PACK" LIGHTING IS NOT PROPOSED.
4. AL CLAWSON DISPOSAL, INC. SHALL BE THE SOLE PROVIDER OF WASTE HAULING FOR THIS SITE BOTH DURING AND AFTER CONSTRUCTION.
5. WATER SERVICE TO BE PROVIDED BY THE CITY OF LEANDER.
6. THE INTENDED USE OF THE 4.52 ACRE PROJECT AREA IS OUTDOOR RECREATION.
7. ALL EASEMENTS OF RECORD AS INDICATED ON THE MOST RECENT TITLE RUN (DATED: AUGUST 14, 2014, CONDUCTED BY INDEPENDENCE TITLE COMPANY) FOR THIS PROPERTY ARE SHOWN ON THIS SITE PLAN.
8. GARBAGE DUMPSTERS ARE LOCATED NO CLOSER TO A ROADWAY THAN THE FRONT WALL OF THE PRINCIPAL STRUCTURE LOCATED CLOSEST TO THE ROADWAY. GARBAGE DUMPSTERS ARE SCREENED BY A WALL (COMPRISED OF MASONRY COMPATIBLE WITH THE STRUCTURE OR WOODCRETE) AT LEAST AS HIGH AS THE CONTAINER. THE OPEN SIDE TO THE DUMPSTER OR OTHER TRASH RECEPTACLE IS A GATE CONSTRUCTED OF SOLID WOOD OR METAL. THE DUMPSTER IS ORIENTED FOR PICKUP BY A FRONT LOAD GARBAGE TRUCK.
9. IF 90 GALLON ROLL OUT CONTAINERS ARE STORED OUTSIDE, THEY ARE REQUIRED TO BE ENCLOSED BY A PRIVACY FENCE.
10. MECHANICAL EQUIPMENT SHALL BE SCREENED FROM VIEW OF AT LEAST SIXTY (60%) PERCENT OF ANY STREET OR PUBLIC RIGHT-OF-WAY.

CONCRETE PAVEMENT QUALITY CONTROL NOTES

1. CONCRETE FORMWORK AND REINFORCEMENT - THE CONTRACTOR SHALL NOTIFY THE OWNER AND/OR OWNER'S INSPECTOR A MINIMUM OF 18 HOURS PRIOR TO THE PLANNED PLACEMENT OF CONCRETE. THE OWNER AND/OR INSPECTOR MUST HAVE OBSERVED AND APPROVED THE FORMWORK AND REINFORCEMENT PRIOR TO ANY PLACEMENT OF CONCRETE.
2. CONCRETE SIDEWALK FINISH AND SAW JOINTS - ALL FINISHES SHALL COMPLY WITH THE SPECIFICATIONS INDICATED ON THE CONSTRUCTION DETAILS. ANY CONCRETE PLACED WITH AN IMPROPER FINISH SHALL BE REMOVED AND REPLACED AT THE CONTRACTOR'S EXPENSE. ALL SAW JOINTS SHALL BE SAWN WITHIN 8-12 HOURS OF CONCRETE PLACEMENT. ANY CONCRETE SAWN LATER THAN THIS WHICH, IN THE OPINION OF THE OWNER AND/OR INSPECTOR, HAS EXCESSIVE SHRINKAGE CRACKS DUE TO NOT HAVING BEEN SAWN IN A TIMELY MANNER, SHALL BE REMOVED AND REPLACED AT THE CONTRACTOR'S EXPENSE.
3. ALIGNMENT AND TANGENCY OF PAVEMENTS - THE EDGES OF ALL FINISHED PAVING SHALL BE STRAIGHT OR SMOOTH CURVES (AS DELINEATED ON THE PLANS) WITH NO INTERRUPTIONS SUCH AS CHORDS, WAVES, JOGS, OR MISSED TANGENTS. PAVEMENTS WITH SUCH INTERRUPTIONS SHALL BE REMOVED AND REPLACED AT THE CONTRACTOR'S EXPENSE.
4. CONCRETE WALKWAY REINFORCEMENT TO BE PLACED 3/4" TO 1" MAX. BELOW FINISHED SURFACE OF CONCRETE ON PLASTIC CHAIRS. NO PAVERS OR DEBRIS TO BE USED TO SUPPORT REINFORCEMENT.
5. NO CONCRETE COLD JOINTS ARE ACCEPTABLE UNLESS OTHERWISE NOTED OR DETAILED ON THESE PLANS.
6. PROVIDE EXPANSION JOINTS AND CONTROL JOINTS PER THIS PLAN AND DETAILS. PROVIDE EXPANSION JOINTS BETWEEN ALL EXISTING AND PROPOSED WALKWAYS, SLABS AND STRUCTURES.
7. ANY EXPANSION AND/OR CONTROL JOINTS IN ADDITION TO THOSE INDICATED ON THE SITE PLAN OR PROPOSED MODIFICATIONS TO THE PLAN SHALL BE APPROVED BY THE DESIGN CONSULTANT / OWNER.
8. CROSS SLOPES OF WALKWAY PAVEMENTS SHALL NOT EXCEED A GRADIENT OF 1.5% (0.15 FOOT RISE IN 10.00 FEET OF RUN) UNLESS OTHERWISE SPECIFIED. IF WALKWAY AREA FORMS EXCEED 1.5% NOTIFY DESIGN CONSULTANT IMMEDIATELY.
9. RUNNING SLOPES OF WALKWAY PAVEMENTS SHALL NOT EXCEED A GRADIENT OF 4.50% (0.45 FOOT RISE IN 10.00 FEET OF RUN) UNLESS OTHERWISE SPECIFIED.
10. DESIGN CONSULTANT / OWNER RECOMMEND CONTRACTOR USE 48 IN. SMART LEVEL TO CHECK FORMS PRIOR TO PLACING CONCRETE. 48 IN. LEVEL WILL BE USED BY REGISTERED ACCESSIBILITY SPECIALIST (RAS) FOR ACCESSIBILITY INSPECTION AT COMPLETION OF CONSTRUCTION.

NOTE:

CONTRACTOR TO INSTALL IRRIGATION SLEEVES AND ELECTRICAL CONDUIT PRIOR TO PLACEMENT OF PAVEMENT. REFER TO IRRIGATION AND ELECTRICAL PLANS FOR LOCATIONS AND INSTALLATION SPECIFICATIONS / DETAILS.

BAKER-AICKLEN & ASSOCIATES, INC.
CIVIL ENGINEERS | SURVEYORS | PLANNERS | LANDSCAPE ARCHITECTS
507 WEST LIBERTY AVENUE
ROUND ROCK TEXAS 78664
(512) 244-9620
ENGINEERING FIRM # F-45
SURVEY FIRM # LS223-G
TBAE# 1337

ROUND ROCK - CEDAR PARK

DESIGNED: BH/GF | DRAWN: BH/GF | REVIEWED: BH

NO.	DATE	REVISIONS
NO.1	4.15.15	SECOND PERMIT REVIEW SUBMITTAL
NO.2	4.29.15	THIRD PERMIT REVIEW SUBMITTAL

CITY
CITY
RECOM'D

CLIENT | OWNER: CITY OF LEANDER TEXAS

PROJECT: VETERAN'S PARK

SHEET TITLE: SITE PLAN

PROJECT No. 0674-2-017

SHEET No. L-5

LEGEND

- LOC — LIMITS OF CONSTRUCTION
- EXPANSION JOINT (EJ)
- EXPANSION JOINT IN CONCRETE PAVER BED
- CONTROL JOINT (CJ)
- CONCRETE CURB
- RIBBON CURB
- HAND RAIL
- FLUSH INDICATOR
- CONCRETE WALKWAY
- CONCRETE PAVERS
- DECOMPOSED GRANITE TRAIL
- EXISTING WIRE FENCE
- EXISTING WOOD FENCE
- EXISTING IRON FENCE

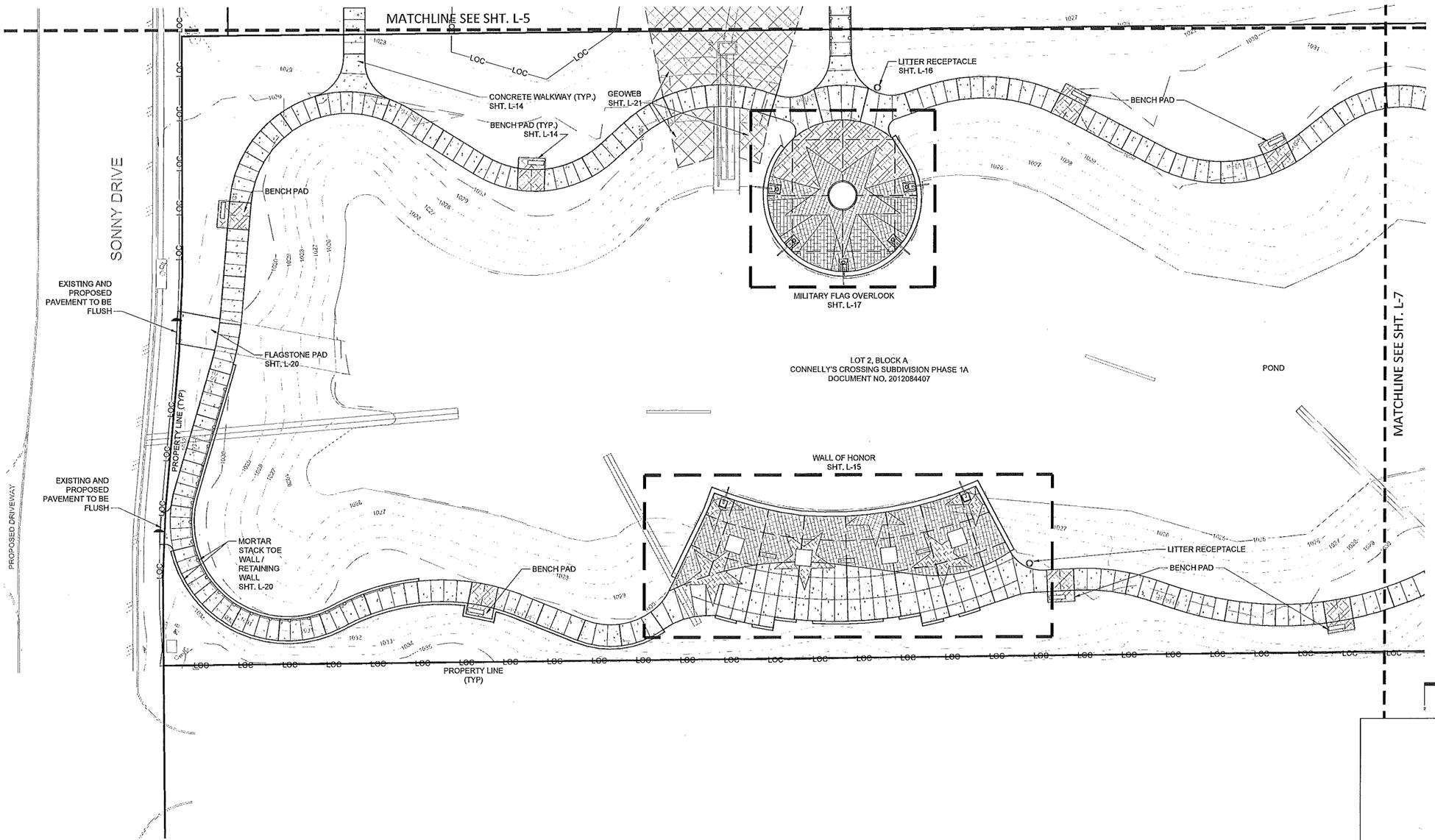

BAKER-AICKLEN & ASSOCIATES, INC.
507 WEST LIBERTY AVENUE
ROUND ROCK TEXAS 78664
(512) 244-9620
ENGINEERING | SURVEYING | LANDSCAPE ARCHITECTURE
BURTON FIRM # F-10022-16 TBAE# 1707

DESIGNED: BHGF DRAWN: BHGF REVIEWED: BH

REGISTERED LANDSCAPE ARCHITECT BRIAN HAYS STEWART 2156 STATE OF TEXAS

NO.	DATE	REVISIONS	
NO.1	4.15.15	SECOND PERMIT REVIEW SUBMITTAL	CITY
NO.2	4.29.15	THIRD PERMIT REVIEW SUBMITTAL	CITY
			RECD/D

CLIENT / OWNER: CITY OF LEANDER TEXAS

PROJECT: VETERAN'S PARK

SHEET TITLE: SITE PLAN

PROJECT No. 0674-2-017

SHEET No. L-6

8 OF 27

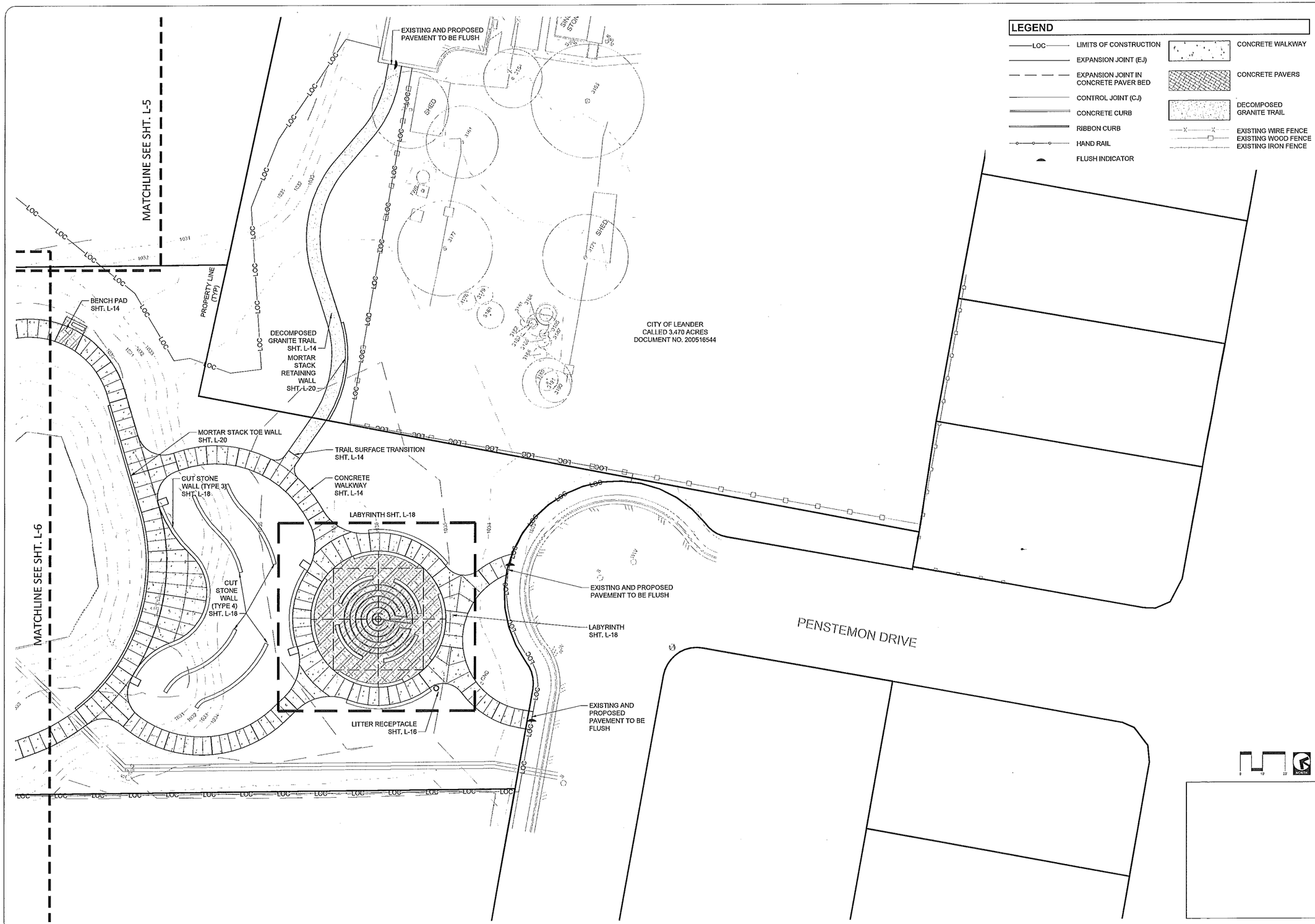

LEGEND

LOC — LIMITS OF CONSTRUCTION	CONCRETE WALKWAY
EXPANSION JOINT (EJ)	CONCRETE PAVERS
EXPANSION JOINT IN CONCRETE PAVER BED	DECOMPOSED GRANITE TRAIL
CONTROL JOINT (CJ)	EXISTING WIRE FENCE
CONCRETE CURB	EXISTING WOOD FENCE
RIBBON CURB	EXISTING IRON FENCE
HAND RAIL	
FLUSH INDICATOR	

BAKER-AICKLEN & ASSOCIATES, INC.
507 WEST LIBERTY AVENUE
ROUND ROCK TEXAS 78664
(512) 244-9020
ENGINEERING FIRM # F-45
SURVEY FIRM # 100223-10
TBAE# 17077
CIVIL ENGINEERS | SURVEYORS | CEO | PLANNERS | LANDSCAPE ARCHITECTS
ROUND ROCK - CEDAR PARK

DESIGNED: BH/GF DRAWN: BH/GF REVIEWED: BH

REGISTERED LANDSCAPE ARCHITECT BRANDON J. HAY 2756 STATE OF TEXAS 04/15/15

NO.	DATE	REVISIONS	RECOM'D
NO.1	4.15.15	SECOND PERMIT REVIEW SUBMITTAL	CITY
NO.2	4.29.15	THIRD PERMIT REVIEW SUBMITTAL	CITY

CLIENT | OWNER: CITY OF LEANDER TEXAS

PROJECT: VETERAN'S PARK

SHEET TITLE: SITE PLAN

PROJECT No. 0674-2-017

SHEET No. L-7

9 OF 27

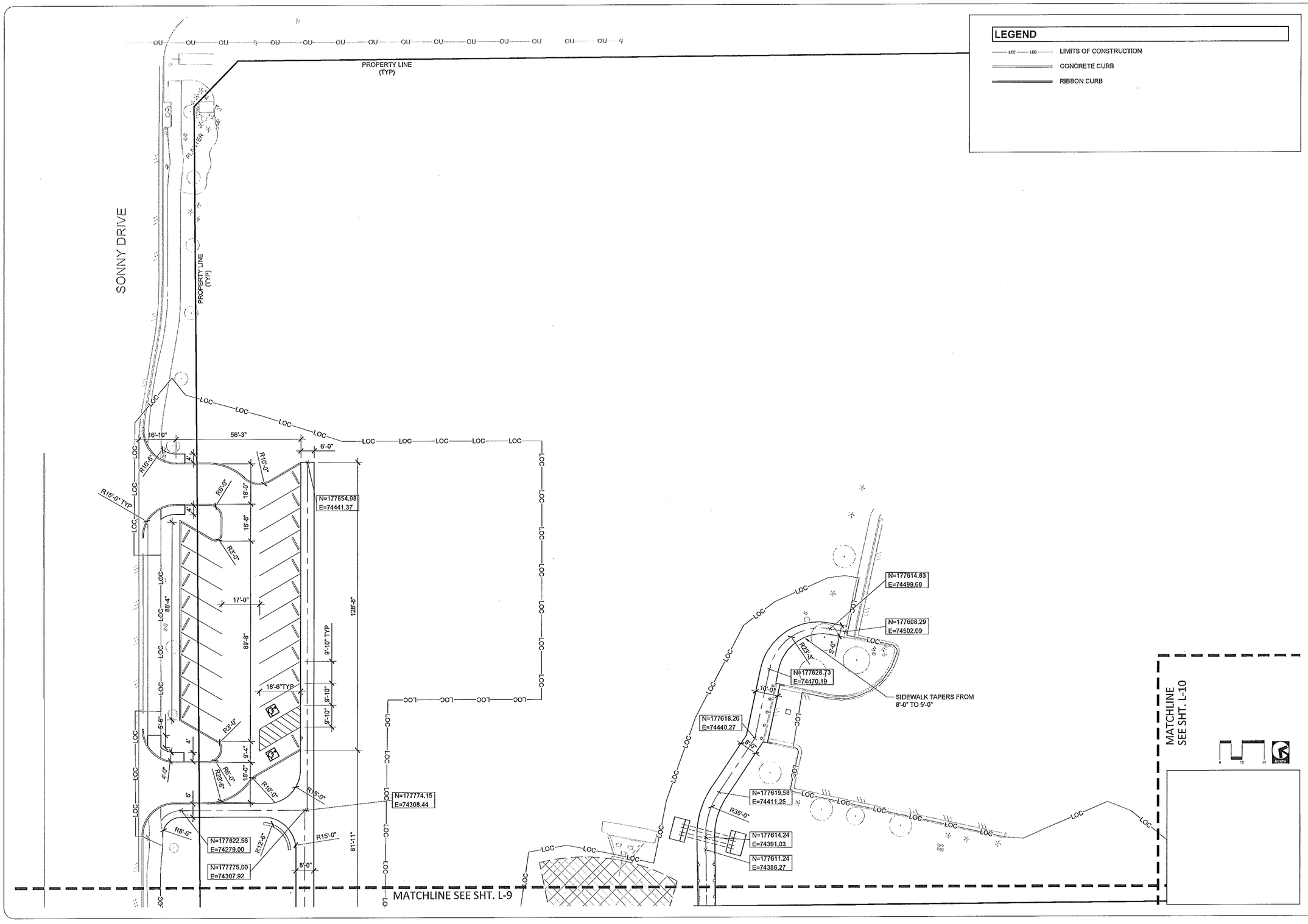

BAKER-AICKLEN & ASSOCIATES, INC.
507 WEST LIBERTY AVENUE
ROUND ROCK TEXAS 78664
512 244-9620
ENGINEERING FIRM # F-445
SURVEYING FIRM # 10123900
TBAE# 17577
DESIGNED: BH/GF
DRAWN: BH/GF
REVIEWED: BH

REGISTERED LANDSCAPE ARCHITECT
BRADY HAYES
STATE OF TEXAS
2756
04/15/15

NO.	DATE	REVISIONS	
NO.1	4.15.15	SECOND PERMIT REVIEW SUBMITTAL	CITY
NO.2	4.29.15	THIRD PERMIT REVIEW SUBMITTAL	CITY
			RECOMD

CLIENT | OWNER
CITY OF LEANDER TEXAS

PROJECT
VETERAN'S PARK

SHEET TITLE
LAYOUT PLAN

PROJECT No.
0674-2-017

SHEET No. L-8
10 OF 27

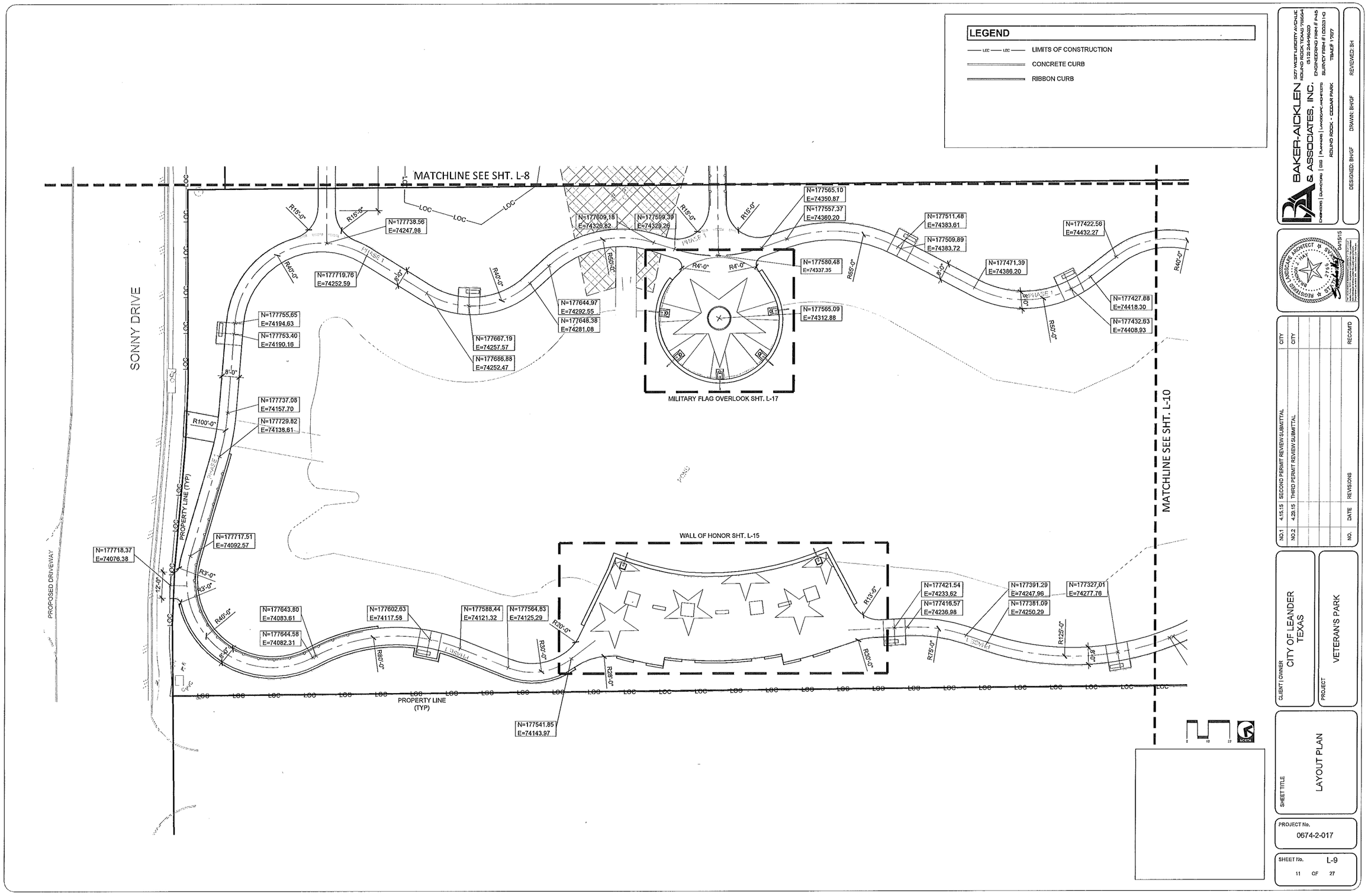

BAKER-AICKLEN & ASSOCIATES, INC.
5027 WEST LIBERTY AVENUE
ROUND ROCK TEXAS 78664
(512) 244-9620
ENGINEERING FIRM # F-45
SURVEY FIRM # 100231-0
TBAE# 1787
DESIGNED: BH/GF
DRAWN: BH/GF
REVIEWED: BH

NO.	DATE	REVISIONS	RECOM'D
NO.1	4.15.15	SECOND PERMIT REVIEW SUBMITTAL	CITY
NO.2	4.29.15	THIRD PERMIT REVIEW SUBMITTAL	CITY

CLIENT | OWNER: CITY OF LEANDER TEXAS

PROJECT: VETERAN'S PARK

SHEET TITLE: LAYOUT PLAN

PROJECT No. 0674-2-017

SHEET No. L-9

11 OF 27

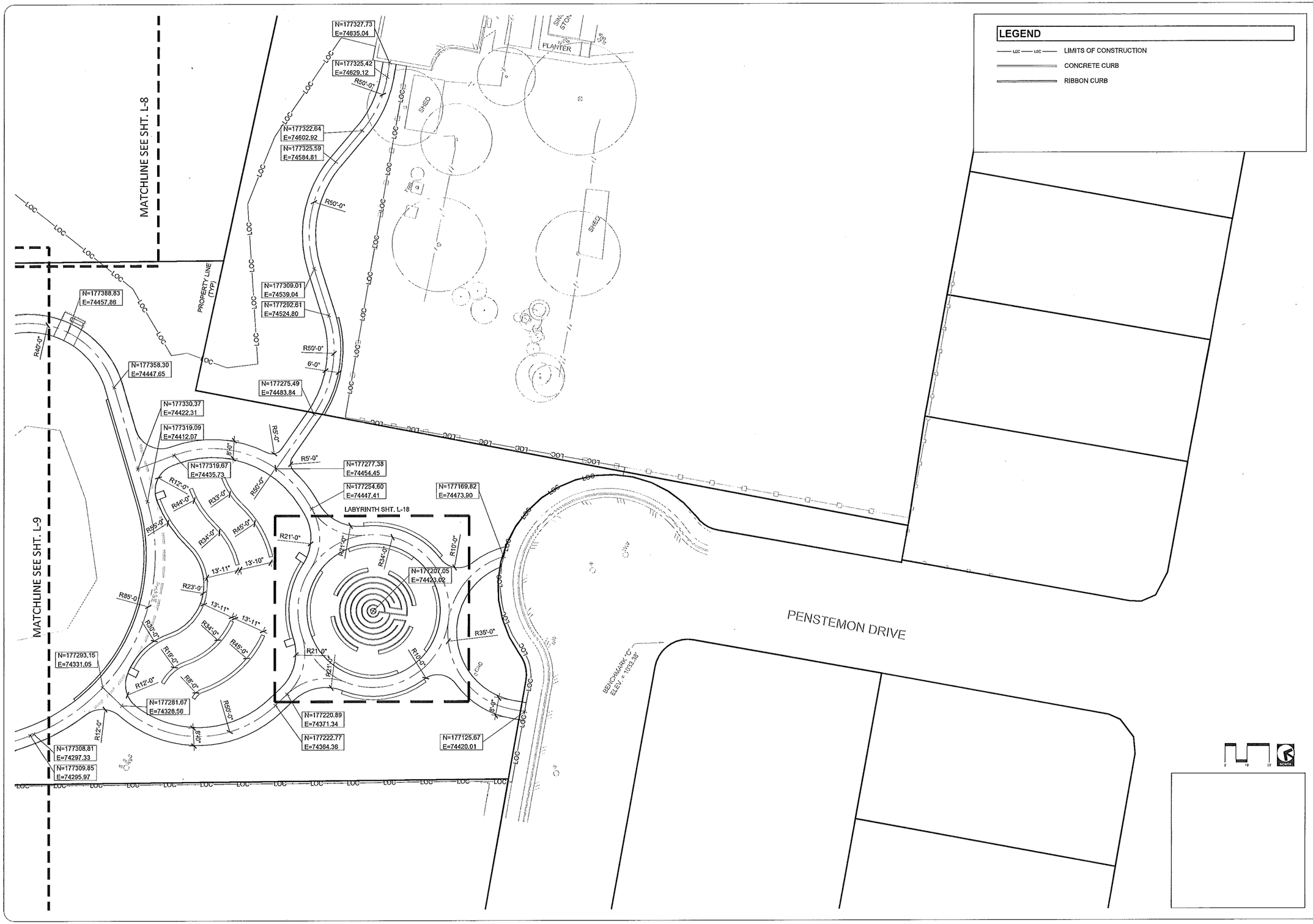

BAKER-AICKLEN & ASSOCIATES, INC.
ENGINEERING | SURVEYING | PLANNING | LANDSCAPE ARCHITECTS
ROUND ROCK - CEDAR PARK
507 WEST LIBERTY AVENUE
ROUND ROCK TEXAS 78664
(512) 244-9020
ENGINEERING FIRM # F-45
SURVEY FIRM # 10023110
TBAE# 17077

DESIGNED: BH/GF DRAWN: BH/GF REVIEWED: BH

REGISTERED LANDSCAPE ARCHITECT BRANDON J. MAY 2715 STATE OF TEXAS 04/15/15

NO.	DATE	REVISIONS	RECOM'D
NO.1	4.15.15	SECOND PERMIT REVIEW SUBMITTAL	CITY
NO.2	4.29.15	THIRD PERMIT REVIEW SUBMITTAL	CITY

CLIENT | OWNER: CITY OF LEANDER TEXAS

PROJECT: VETERAN'S PARK

SHEET TITLE: LAYOUT PLAN

PROJECT No. 0674-2-017

SHEET No. L-10

12 OF 27

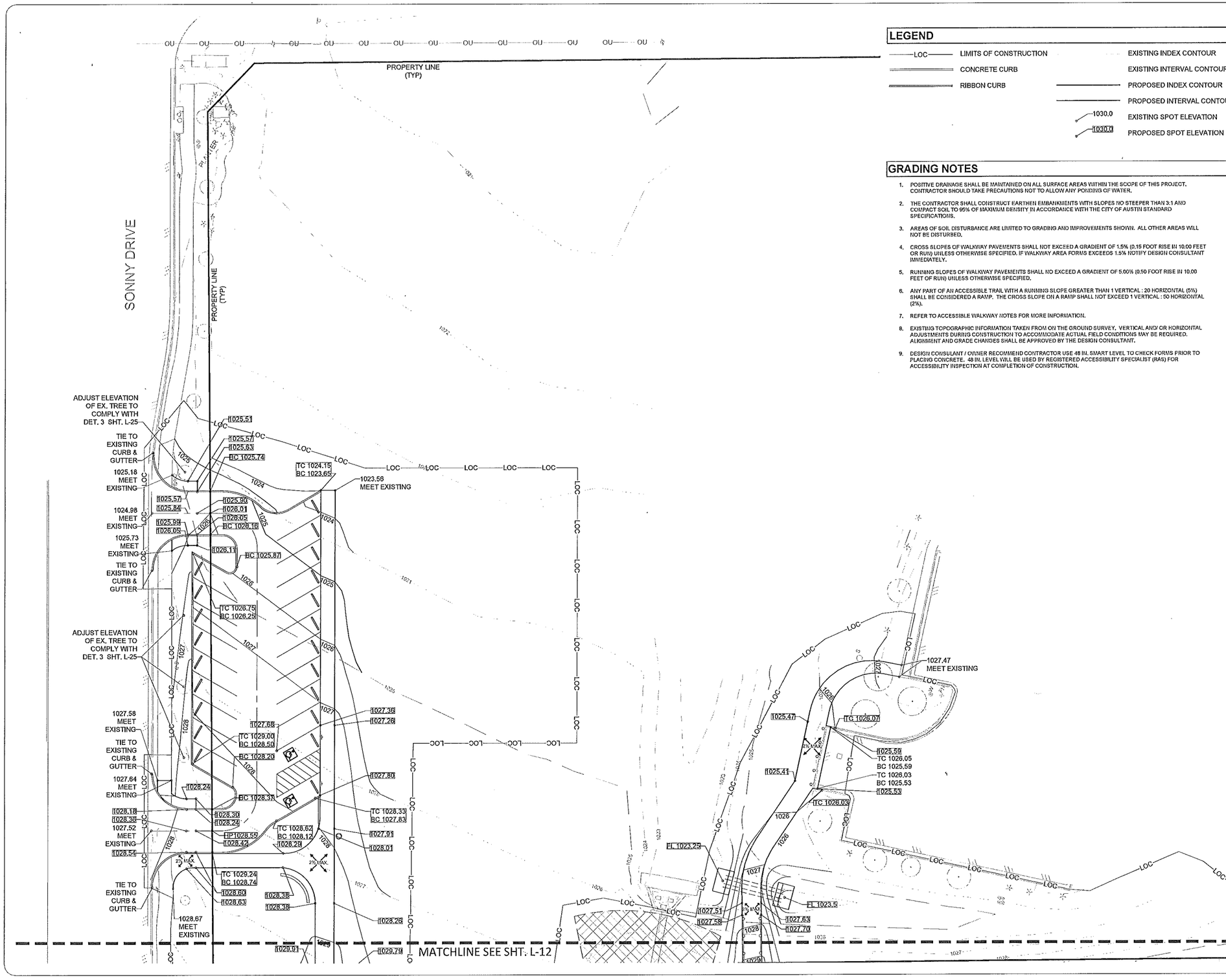

LEGEND

LOC — LIMITS OF CONSTRUCTION	EXISTING INDEX CONTOUR
CONCRETE CURB	EXISTING INTERVAL CONTOUR
RIBBON CURB	PROPOSED INDEX CONTOUR
	PROPOSED INTERVAL CONTOUR
1030.0	EXISTING SPOT ELEVATION
1030.0	PROPOSED SPOT ELEVATION

GRADING NOTES

1. POSITIVE DRAINAGE SHALL BE MAINTAINED ON ALL SURFACE AREAS WITHIN THE SCOPE OF THIS PROJECT. CONTRACTOR SHOULD TAKE PRECAUTIONS NOT TO ALLOW ANY PONDING OF WATER.
2. THE CONTRACTOR SHALL CONSTRUCT EARTHEN EMBANKMENTS WITH SLOPES NO STEEPER THAN 3:1 AND COMPACT SOIL TO 95% OF MAXIMUM DENSITY IN ACCORDANCE WITH THE CITY OF AUSTIN STANDARD SPECIFICATIONS.
3. AREAS OF SOIL DISTURBANCE ARE LIMITED TO GRADING AND IMPROVEMENTS SHOWN. ALL OTHER AREAS WILL NOT BE DISTURBED.
4. CROSS SLOPES OF WALKWAY PAVEMENTS SHALL NOT EXCEED A GRADIENT OF 1.5% (0.15 FOOT RISE IN 10.00 FEET OR RUN) UNLESS OTHERWISE SPECIFIED. IF WALKWAY AREA FORMS EXCEEDS 1.5% NOTIFY DESIGN CONSULTANT IMMEDIATELY.
5. RUNNING SLOPES OF WALKWAY PAVEMENTS SHALL NO EXCEED A GRADIENT OF 5.00% (0.50 FOOT RISE IN 10.00 FEET OF RUN) UNLESS OTHERWISE SPECIFIED.
6. ANY PART OF AN ACCESSIBLE TRAIL WITH A RUNNING SLOPE GREATER THAN 1 VERTICAL : 20 HORIZONTAL (5%) SHALL BE CONSIDERED A RAMP. THE CROSS SLOPE ON A RAMP SHALL NOT EXCEED 1 VERTICAL : 50 HORIZONTAL (2%).
7. REFER TO ACCESSIBLE WALKWAY NOTES FOR MORE INFORMATION.
8. EXISTING TOPOGRAPHIC INFORMATION TAKEN FROM ON THE GROUND SURVEY. VERTICAL AND/ OR HORIZONTAL ADJUSTMENTS DURING CONSTRUCTION TO ACCOMMODATE ACTUAL FIELD CONDITIONS MAY BE REQUIRED. ALIGNMENT AND GRADE CHANGES SHALL BE APPROVED BY THE DESIGN CONSULTANT.
9. DESIGN CONSULANT / OWNER RECOMMEND CONTRACTOR USE 48 IN. SMART LEVEL TO CHECK FORMS PRIOR TO PLACING CONCRETE. 48 IN. LEVEL WILL BE USED BY REGISTERED ACCESSIBILITY SPECIALIST (RAS) FOR ACCESSIBILITY INSPECTION AT COMPLETION OF CONSTRUCTION.

STATE OF TEXAS
DAVID URBAN
82783
LICENSED PROFESSIONAL ENGINEER
SIGNATURE OF
6/5/2015

BAKER-AICKLEN & ASSOCIATES, INC.
5627 WEST LIBERTY AVENUE
ROUND ROCK TEXAS 78664
(512) 244-9620
ENGINEERING FIRM # F-435
SURVEY FIRM # LS3233 FG
TBAE# 1787
ROUND ROCK - CEDAR PARK
DESIGNERS | SURVEYORS | TBD | PLANNERS | LANDSCAPE ARCHITECTS

DESIGNED: BHGF DRAWN: BHGF REVIEWED: BH

REGISTERED LANDSCAPE ARCHITECT
STATE OF TEXAS
2156
04/15/15

NO.	DATE	REVISIONS	
NO.1	4.15.15	SECOND PERMIT REVIEW SUBMITTAL	CITY
NO.2	4.29.15	THIRD PERMIT REVIEW SUBMITTAL	CITY
			RECOM'D

CLIENT | OWNER: CITY OF LEANDER TEXAS

PROJECT: VETERAN'S PARK

SHEET TITLE: GRADING PLAN

PROJECT No. 0674-2-017

SHEET No. L-11

13 OF 27

LEGEND

LOC	LIMITS OF CONSTRUCTION		EXISTING INDEX CONTOUR
	CONCRETE CURB		EXISTING INTERVAL CONTOUR
	RIBBON CURB		PROPOSED INDEX CONTOUR
			PROPOSED INTERVAL CONTOUR
1030.0			EXISTING SPOT ELEVATION
1030.0			PROPOSED SPOT ELEVATION

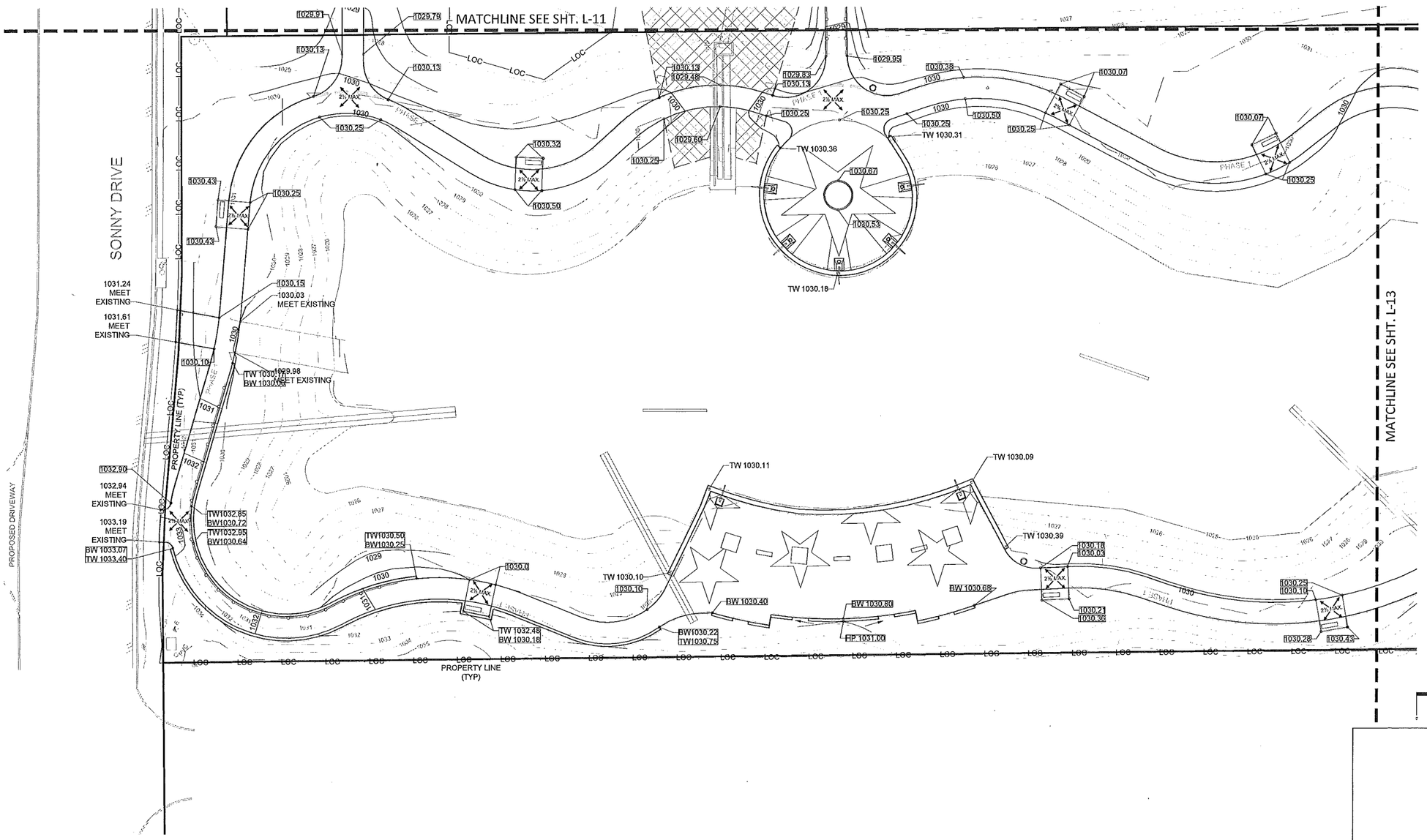

BAKER-AICKLEN & ASSOCIATES, INC.
ENGINEERING | SURVEYING | GIS | PLANNING | LANDSCAPE ARCHITECTS
ROUND ROCK - CEDAR PARK
507 WEST LIBERTY AVENUE
ROUND ROCK TEXAS 78664
(512) 244-9620
ENGINEERING FIRM # F-35
SURVEY FIRM # 100231-0
TBAE# 17877

DESIGNED: BH/GF DRAWN: BH/GF REVIEWED: BH

REGISTERED LANDSCAPE ARCHITECT BRANDON J. HAY STATE OF TEXAS 04/15/15

NO.	DATE	REVISIONS	RECOM'D
NO.1	4.15.15	SECOND PERMIT REVIEW SUBMITTAL	CITY
NO.2	4.29.15	THIRD PERMIT REVIEW SUBMITTAL	CITY

CLIENT / OWNER: CITY OF LEANDER TEXAS

PROJECT: VETERAN'S PARK

SHEET TITLE: GRADING PLAN

PROJECT No. 0674-2-017

SHEET No. L-12

14 OF 27

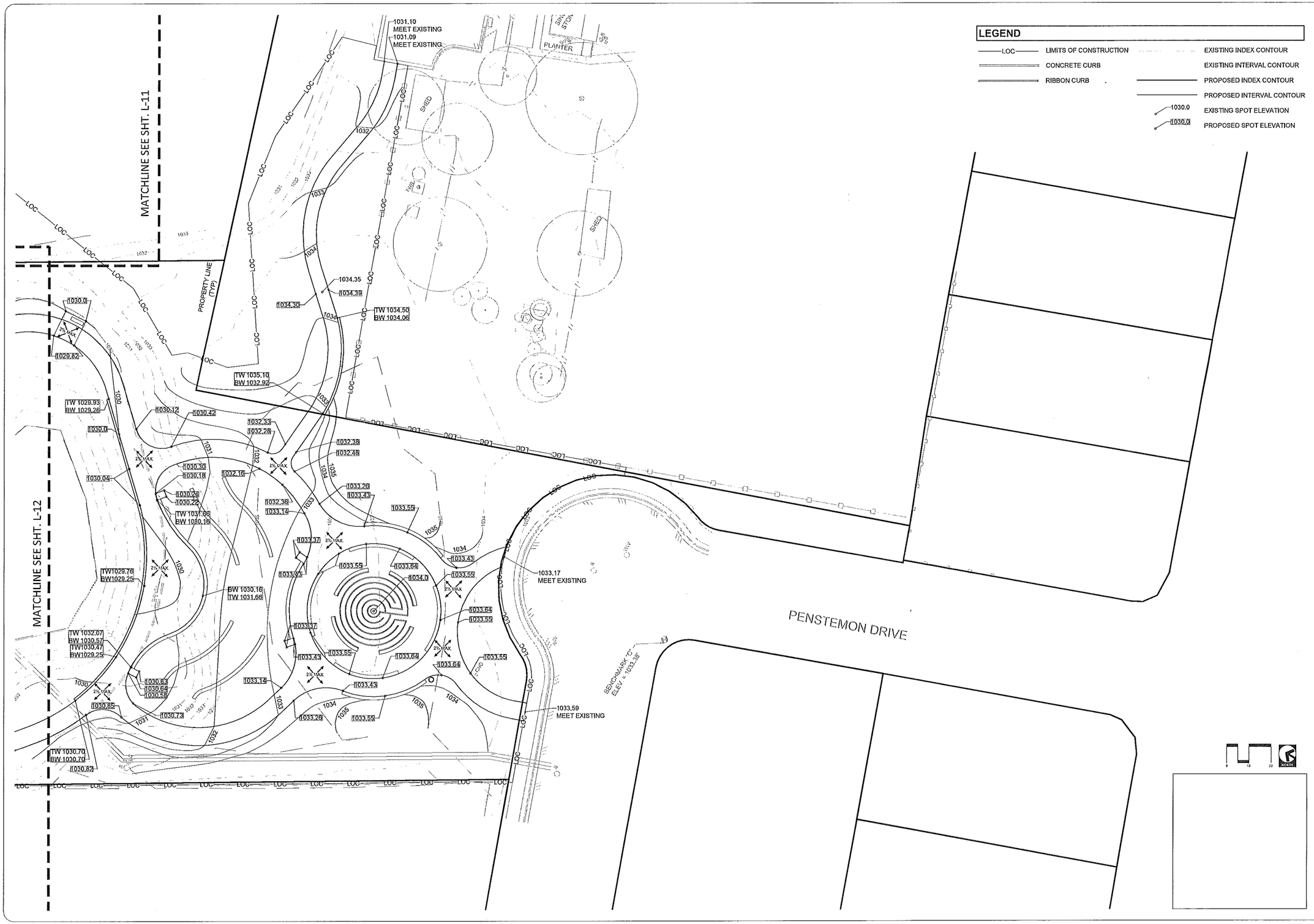

LEGEND

LOC	LIMITS OF CONSTRUCTION		EXISTING INDEX CONTOUR
	CONCRETE CURB		EXISTING INTERVAL CONTOUR
	RIBBON CURB		PROPOSED INDEX CONTOUR
			PROPOSED INTERVAL CONTOUR
1030.0			EXISTING SPOT ELEVATION
1030.0			PROPOSED SPOT ELEVATION

BAKER-AICKLEN & ASSOCIATES, INC.
5277 WEST LIBERTY AVENUE
ROUND ROCK TEXAS 78664
(512) 244-9620
ENGINEERING FIRM # F-15
SURVEY FIRM # 10023110
TBAE# 17877
ENGINEERS | SURVEYORS | GIS | PLANNERS | LANDSCAPE ARCHITECTS
ROUND ROCK • CEDAR PARK

DESIGNED: BH/GF DRAWN: BH/GF REVIEWED: BH

REGISTERED LANDSCAPE ARCHITECT BRANDON J. HAY 27596 STATE OF TEXAS 04/15/15

NO.	DATE	REVISIONS	RECOM'D
NO.1	4.15.15	SECOND PERMIT REVIEW SUBMITTAL	CITY
NO.2	4.29.15	THIRD PERMIT REVIEW SUBMITTAL	CITY

CLIENT | OWNER: CITY OF LEANDER TEXAS

PROJECT: VETERAN'S PARK

SHEET TITLE: GRADING PLAN

PROJECT No. 0674-2-017

SHEET No. L-13

15 OF 27

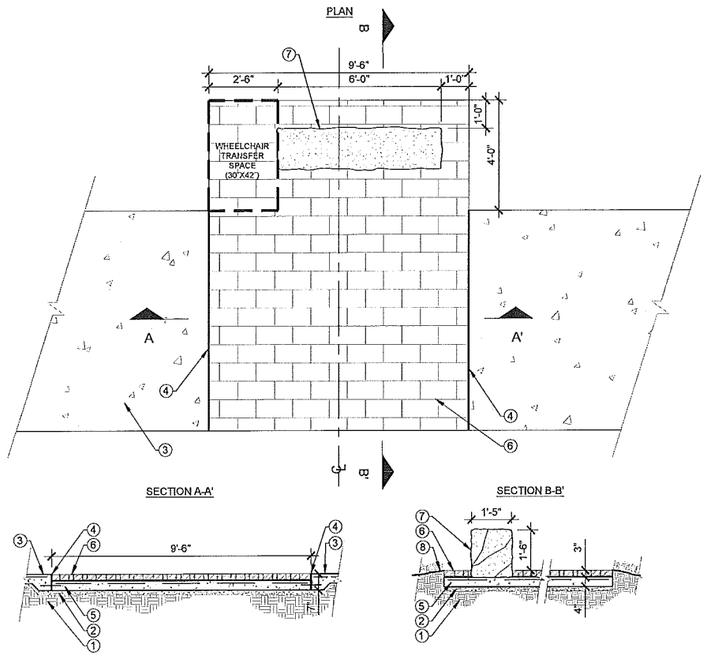

KEY

1. COMPACTED SUBGRADE TO 95% MAX. DENSITY.
2. SAND BED - 2" THICK MINIMUM LEVELING SAND OR DRY SCREENINGS.
3. ADJACENT CONCRETE WALKWAY REF. DET. 3 SHT. L-14
4. EXPANSION JOINT - 3/4" CEDAR FULL DEPTH TO SUPPORT BACKER ROD/ZIP-STRIP, SEAL WITH SL-1 JOINT SEALANT (COLOR TO MATCH CONCRETE / PAVERS); 1/2" DIA. SMOOTH DOWEL 18" LENGTH AT 24" O.C. MIN. TO ADJACENT WALKWAY, GREASE AND CAP FULL LENGTH OF EXPOSED DOWEL. REF. SITE PLAN FOR JOINT LOCATIONS.
5. PAVER BED - 4" CONCRETE, 3000 PSI, CONCRETE WITH #3 BARS AT 18" O.C.E.W. REINF. TO BE PLACED 3/4" MIN. - 1" MAX. BELOW FINISHED SURFACE ON PLASTIC CHAIRS.
6. CONC. PAVERS - 2"X4"X8" CONCRETE BRICK PAVERS, RUNNING BOND. COLOR: RED. MORTAR IN-PLACE, SAND JOINTS; SUBMIT ONE PAVER SAMPLE FOR APPROVAL BY LANDSCAPE ARCHITECT.
7. QUARRY BLOCK BENCH - SINGLE CUT OF STONE PER DIMENSIONS SHOWN, SET ON CONCRETE PAVER BED. COLOR: LUEDERS ROUGHBACK LIMESTONE. SIDES OF BENCH TO REMAIN ROUGH, SMOOTH TOP AND BOTTOM. CUT AND FIT PAVERS TO BASE OF BENCH.
8. FINISH GRADE

PAVER MANUFACTURER:
BELGARD
OLDCASTLE TEXAS
400 JEWELL DRIVE
WACO, TX 76712
512-677-8789 (PHONE)
WWW.BELGARDCOMMERCIAL.COM
OR APPROVED EQUAL BY LANDSCAPE ARCH.

BENCH SUPPLIER:
SOUTHWEST MONUMENT & SIGN
512-331-1522 (PHONE)
512-335-3397 (FAX)
OR APPROVED EQUAL
BY LANDSCAPE ARCH.

1 BENCH PAD
SCALE: 3/8" = 1'-0"

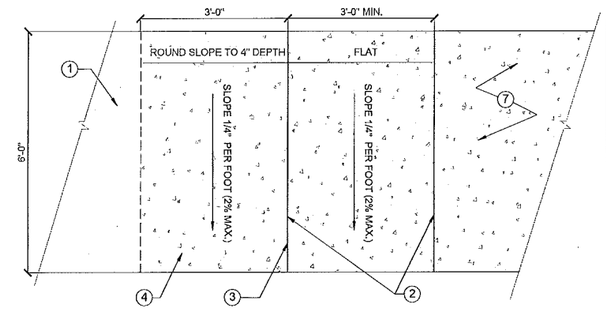

SECTION/ELEVATION

NOTE:
TRANSITION CONCRETE TRAIL TO 4" MINIMUM BELOW FINISHED SURFACE GRADE. TRANSITION SHALL OCCUR WITHIN A LINEAR DISTANCE OF 3'-0" AND SLOPE IN A ROUND FASHION TO A 4" DEPTH TO MEET EXISTING SUBGRADE.

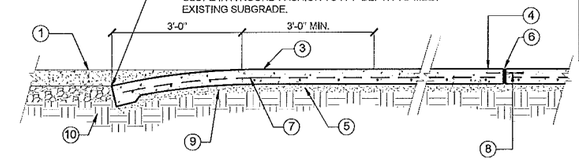

* NOTES: 1) THIS DETAIL SHALL BE USED AT ALL TRAIL SURFACE TRANSITIONS.

KEY

1. 4" DECOMPOSED GRANITE, WET AND COMPACTED TO 3" DEPTH CROWN CENTER TO DRAIN @ 1/4" PER FOOT.
2. 1/4" WIDE, 1/8" DEEP SAW CUT CONTROL JOINT AT FLAT SPOT TRANSITIONS (TYP.)
3. PLACE, WET AND COMPACT GRANITE TO POINT OF TRANSITION. REFER TO NOTE.
4. MEDIUM BROOM FINISH. PERPENDICULAR TO PEDESTRIAN TRAFFIC. TYP.
5. 2" DRY SCREENING OR SAND LEVELING BED
6. 1/2" PREMOLDED EXPANSION JOINT FULL DEPTH TO SUPPORT BACKER ROD; SEAL W/ JOINT SEALANT AFTER CONCRETE CURES
7. ADJACENT CONCRETE WALKWAY. REF. DET. 3 SHT. L-14
8. 1/2" Ø SMOOTH DOWEL, 18" LENGTH 18" O.C., GREASE AND CAP FULL LENGTH OF EXPOSED DOWEL
9. 2" SAND OR DRY SCREENING MIN. AT TURNDOWN, FLUSH W/ EDGE OF PAVEMENT
10. COMPACTED SUBGRADE TO 95% MAX. DENSITY.

NOTE:
DECOMPOSED GRANITE TRAILS AND SURFACES SHALL BE WETTED AND COMPACTED TO FORM A STABLE, FIRM AND SLIP RESISTANT SURFACE WHEN DRY AND PRIOR TO ACCESSIBILITY INSPECTION AND FINAL ACCEPTANCE. REFER 2012 TEXAS ACCESSIBILITY STANDARDS, SECTION 302.

2 TRAIL SURFACE TRANSITION
NTS

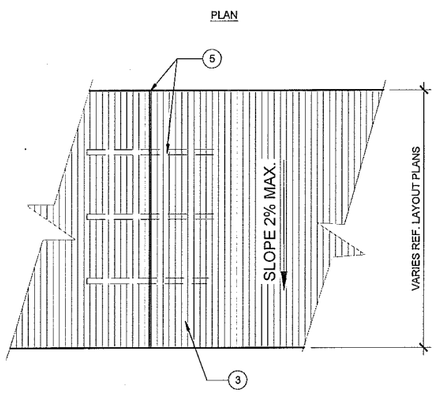

KEY

1. COMPACTED SUBGRADE TO 95% MAX. DENSITY.
2. 2" THICK MINIMUM SAND OR DRY SCREENING LEVELING BED.
3. 4" CONCRETE, 3000 PSI, MEDIUM BROOM FINISH PERPENDICULAR TO DIRECTION OF TRAVEL ON SINGLE RUN WALKWAYS. FOR LARGE PLAZA SLAB AREAS BROOM FINISH TO RUN EAST/WEST.
4. ONE LAYER #3 BARS PLACED NOT MORE THAN 18" O.C. BOTH DIRECTIONS (TYP.) REINF. TO BE PLACED 3/4" MIN. - 1" MAX. BELOW FINISHED SURFACE ON PLASTIC CHAIRS.
5. EXPANSION JOINT - 3/4" CEDAR FULL DEPTH TO SUPPORT BACKER ROD/ZIP-STRIP, SEAL WITH SL-1 JOINT SEALANT (COLOR TO MATCH CONCRETE; 1/2" DIA. SMOOTH DOWEL 18" LENGTH AT 24" O.C. MIN., GREASE AND CAP FULL LENGTH OF EXPOSED DOWEL. REF. SITE PLAN FOR JOINT LOCATIONS.
6. 1/4" WIDE X 5/8" DEPTH CONTROL JOINT. REF. SITE PLAN FOR LOCATIONS. JOINTS MUST BE CUT WITHIN 8-12 HRS. AFTER PLACEMENT.
7. FINISHED GRADE, 1" BELOW PAVEMENT ELEVATION.

NOTES:

1) REFER TO SITE PLAN FOR ADDITIONAL QUALITY CONTROL NOTES.

JOINT SECTION

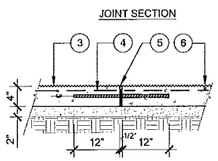

TYPICAL CROSS SECTION

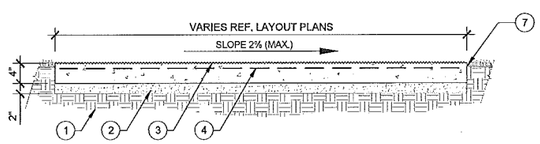

3 CONCRETE WALKWAY
SCALE: 3/4" = 1'-0"

KEY

1. DG GRAVEL, TWO LIFTS, PLACE AND COMPACT LIFTS TO 95% SEPARATELY, DEPTH OF EACH LIFT SHOULD BE 2" AFTER COMPACTION
2. FINISH GRADE
3. FLEXIBLE BASE, COMPACT TO 95%
4. PROVIDE SHALLOW SWALE ALONG UPHILL SIDE OF PATH TO CHANNEL STORMWATER TO CULVERTS, ENSURE THAT STORMWATER IS NOT DIRECTED OVER THE TOP OF THE PATH AT ANY POINT
5. HIGH POINT
6. COMPACTED SUBGRADE OR COMPACTED FILL

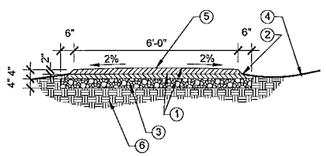

4 DECOMPOSED GRANITE TRAIL
SCALE: 3/8" = 1'-0"

BAKER-AICKLEN & ASSOCIATES, INC.
5627 WEST LIBERTY AVENUE
ROUND ROCK TEXAS 78664
(512) 244-9523
ENGINEERING | SURVEYING | PLANNING | LANDSCAPE ARCHITECTS
ENGINEERING FIRM # F-1023
SURVEYING FIRM # F-10124
ROUND ROCK - CEDAR PARK
TBAE / TBPLS

DESIGNED: BH/GF | DRAWN: BH/GF | REVIEWED: BH

REGISTERED LANDSCAPE ARCHITECT
BRADLEY HAYS
STATE OF TEXAS
2759
04/15/15

NO.	DATE	REVISIONS	
NO.1	4.15.15	SECOND PERMIT REVIEW SUBMITTAL	CITY
NO.2	4.29.15	THIRD PERMIT REVIEW SUBMITTAL	CITY
			RECOM'D

CLIENT | OWNER: CITY OF LEANDER TEXAS

PROJECT: VETERAN'S PARK

SHEET TITLE: DETAILS

PROJECT No. 0674-2-017

SHEET No. L-14

16 OF 27

KEY

1. COMPACTED SUBGRADE TO 95% MAX. DENSITY.
2. SAND BED - 2" THICK MINIMUM LEVELING SAND OR DRY SCREENINGS.
3. EXPANSION JOINT - 3/4" CEDAR FULL DEPTH TO SUPPORT BACKER ROD/ZIP-STRIP, SEAL WITH SL-1 JOINT SEALANT (COLOR TO MATCH CONCRETE / PAVERS); 1/2" DIA. SMOOTH DOWEL 18" LENGTH AT 24" O.C. MIN. TO ADJACENT WALKWAY, GREASE AND CAP FULL LENGTH OF EXPOSED DOWEL. REF. SITE PLAN FOR JOINT LOCATIONS.
4. CONCRETE FOOTING - PER DIMENSIONS SHOWN, 3000 PSI FOOTING, #3 HORZ. BARS AT 18" O.C. W/ (4) #5 BARS CONTINUOUS ALONG LENGTH OF FOOTING.
5. CMU REINF. - #6 VERT. BARS AT 24" O.C. MAX. TO RUN THROUGH CMU BLOCK TO TOP OF STRUCTURE. BACKFILL WITH CONCRETE, L' BOTTOM OF BAR & PLACE MIN. 12" INTO FOOTING PRIOR TO POUR.
6. STONE VENEER (A) - SMOOTH CUT STONE PANELS, 2" THICK x 4" MAX. WIDE PER PANEL, NO HORIZONTAL JOINTS. COLOR: CORDOVA CREAM, PROVIDE 12"x12" MIN. SAMPLE FOR APPROVAL BY LANDSCAPE ARCHITECT, BUTT JOINT PANELS AND MORTAR TO MATCH STONE, RAKE JOINTS FLUSH WITH ROCK FACE FOR SEAMLESS LOOK. REF. SPECS FOR ENGRAVING LAYOUT.
7. STONE VENEER (B) - 1" THICK ROUGH CUT FACE STONE PANELS. HT. RANGE FROM 8" TO 12". MIN. CUT LENGTH 12". TOP OF VENEER NOT TO EXCEED 2'-4" FROM CONC. WALK, REF. ELEVATION. NO HORIZONTAL JOINTS. COLOR: LUEDERS, PROVIDE 12"x12" MIN. SAMPLE FOR APPROVAL BY LANDSCAPE ARCHITECT, BUTT JOINT PANELS AND MORTAR TO MATCH STONE, RAKE JOINTS FLUSH WITH ROCK FACE FOR SEAMLESS LOOK.
8. STONE VENEER (C) - 2" THICK SPLIT FACE STONE PANELS. HT. RANGE FROM 1'-4" TO 1'-10", REF. ELEVATION. MIN. CUT LENGTH 24". NO HORIZONTAL JOINTS. COLOR: LUEDERS ROUGHBACK LIMESTONE. PROVIDE 12"x12" MIN. SAMPLE FOR APPROVAL BY LANDSCAPE ARCHITECT, BUTT JOINTS, MIN CUT LENGTH 3'. MORTAR TO MATCH STONE, RAKE JOINTS FLUSH WITH ROCK FACE FOR SEAMLESS LOOK.
9. UPLIGHT QTY. 10. MODEL #32809.023 - TOP OF FIXTURE TO BE FLUSH WITH TOP OF CONCRETE. REF. PLAN FOR LAYOUT, SPACE 6' O.C. REF. ELECTRIC PLANS FOR UPLIGHT SPEC. AND ELECTRICAL. PROVIDE 3" MINIMUM CONCRETE AROUND ALL SIDES OF UPLIGHT HOUSING. POUR CONCRETE SEPARATELY FROM ADJACENT PLAZA AND WALL FOOTING.
10. ADJACENT CONCRETE WALKWAY REF. DET. 3 SHT. L-14
11. TOOLED COLD JOINT - TOOL JOINT DURING CONCRETE PLACEMENT. 1/2" DIA. SMOOTH DOWEL 18" LENGTH AT 24" O.C. MIN., TO ADJACENT PAVEMENT, GREASE AND CAP FULL LENGTH OF EXPOSED DOWEL.
12. FINISH GRADE
13. BOUNDARY FOR ENGRAVING AREA. REF. SPECS FOR ENGRAVING INFORMATION.
14. QUARRY BLOCK BENCH - SINGLE CUT OF STONE, 6'-0"L x 18"W x 18" EXPOSED HT., SET ON CONCRETE PAVER BED. COLOR: LUEDERS ROUGHBACK LIMESTONE. SIDES OF BENCH TO REMAIN ROUGH, SMOOTH TOP AND BOTTOM. CUT AND FIT PAVERS TO BASE OF BENCH.

LIGHTING SUPPLIER:
ERT LIGHTING
CONTACT: STEPHEN DRAKE
P:512-419-9142
WWW.ERTLIGHTING.COM
OR APPROVED EQUAL BY LANDSCAPE ARCH.

STONE AND ENGRAVING SUPPLIER:
SOUTHWEST MONUMENT & SIGN
512-331-1522 (PHONE)
512-335-3397 (FAX)
OR APPROVED EQUAL BY LANDSCAPE ARCH.

PAVER MANUFACTURER:
BELGARD
OLDCASTLE TEXAS
400 JEWELL DRIVE
WACO, TX 76712
P: 512-677-8789
WWW.BELGARDCOMMERCIAL.COM
OR APPROVED EQUAL BY LANDSCAPE ARCH.

NOTE: VERIFY LIGHT FIXTURE ORIENTATION WITH OWNER/LANDSCAPE ARCHITECT PRIOR TO PLACEMENT OF JUNCTION BOXES FOR FIXTURES.

PLAN: 1/8"=1'-0"

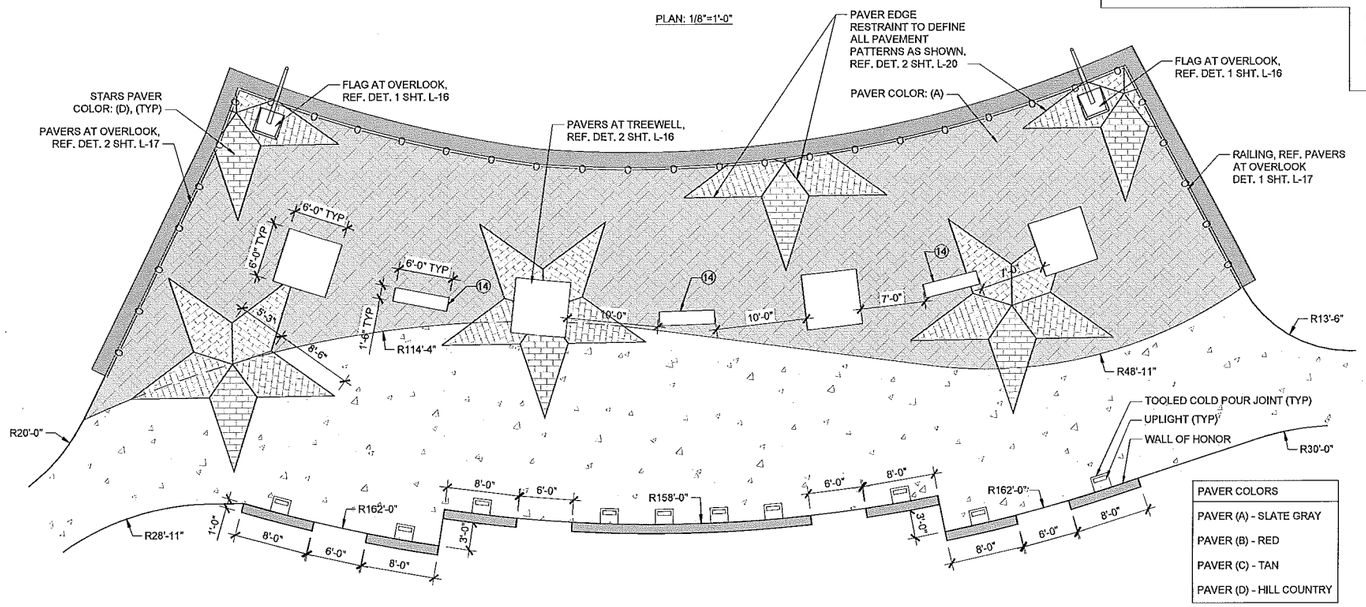

PAVER COLORS
PAVER (A) - SLATE GRAY
PAVER (B) - RED
PAVER (C) - TAN
PAVER (D) - HILL COUNTRY

TYP. WALL SECTION: 1/2"=1'-0"

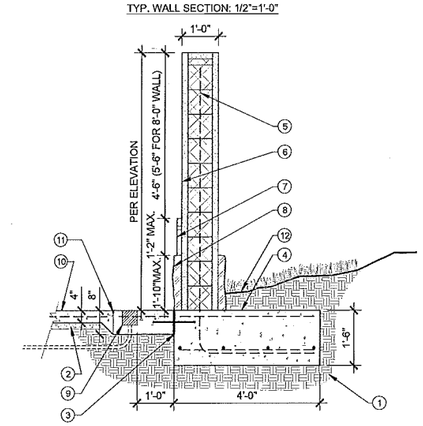

ELEVATION: 1/4"=1'-0"

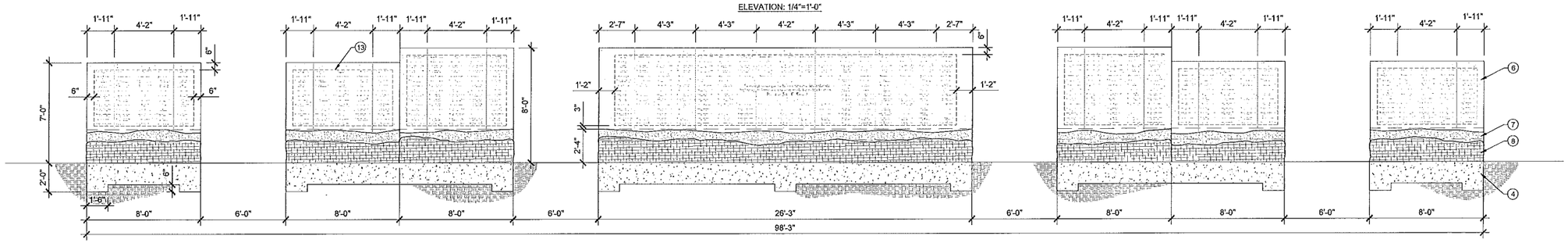

1 WALL OF HONOR

BAKER-AICKLEN & ASSOCIATES, INC.
527 WEST LIBERTY AVENUE
ROUND ROCK, TEXAS 78664
(512) 244-9003
ENGINEERING FIRM # F-145
SURVEY FIRM # 10023114
ROUND ROCK - CEDAR PARK
TBAE# 17627

DESIGNED: BH/GF | DRAWN: BH/GF | REVIEWED: BH

REGISTERED LANDSCAPE ARCHITECT BRADLEY HOLLOWAY 2759 STATE OF TEXAS 04/15/15

NO.	DATE	REVISIONS	
NO.1	4.15.15	SECOND PERMIT REVIEW SUBMITTAL	CITY
NO.2	4.29.15	THIRD PERMIT REVIEW SUBMITTAL	CITY
			RECOM'D

CLIENT | OWNER: CITY OF LEANDER TEXAS

PROJECT: VETERAN'S PARK

SHEET TITLE: DETAILS

PROJECT No. 0674-2-017

SHEET No. L-15

17 OF 27

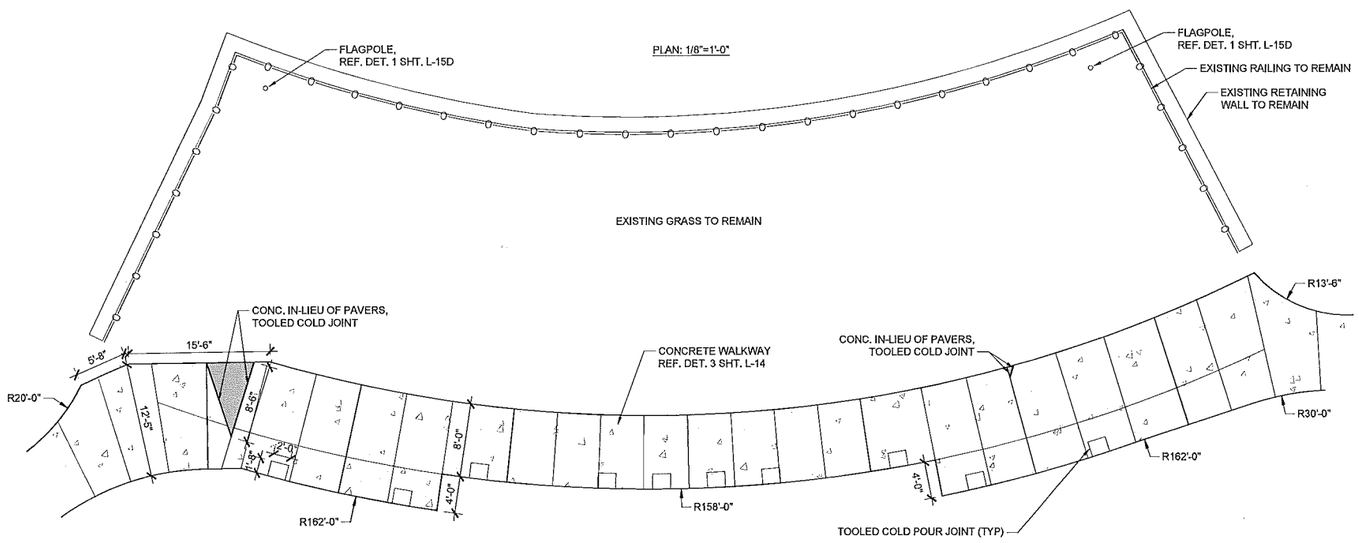

FLAG POLE SUPPLIER
AIRBORNE FLAG & FLAGPOLE
CONTACT: DUSTIN WHITE
P: 210-520-3524
WWW.AIRBORNEFLAGDIRECT.COM
OR APPROVED EQUAL BY
LANDSCAPE ARCH.

EXPOSED HT.	QTY.
25	2

NOTES:
1) 25' DARK BRONZE ANODIZED METAL FLAGPOLE W/ SPUN BRONZETONE COLLAR
2) CONTRACTOR TO PROVIDE COLOR SAMPLES FOR APPROVAL BY LANDSCAPE ARCHITECT PRIOR TO ORDER.
2) INSTALLED PER MANUFACTURER'S SPECS. REF. SPECS FOR MOUNTING INSTRUCTIONS AND PRODUCT DETAILS.

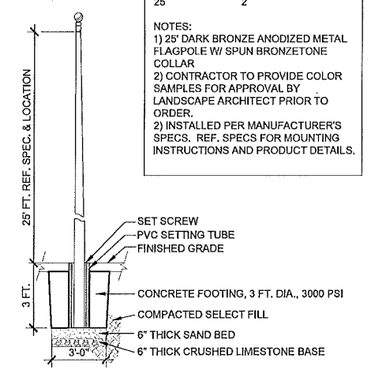

1 FLAGPOLE
SCALE: NTS

BAKER-AICKLEN & ASSOCIATES, INC.
527 WEST LIBERTY AVENUE
ROUND ROCK, TEXAS 78664
(512) 244-9003
ENGINEERING FIRM # F-445
SURVEY FIRM # 10023-10
TBAE# 17977
ENGINEERING | SURVEYING | GIS | PLANNING | LANDSCAPE ARCHITECTS
ROUND ROCK - CEDAR PARK

DESIGNED: BH/GF
DRAWN: BH/GF
REVIEWED: BH

REGISTERED LANDSCAPE ARCHITECT
STEVEN M. HAM
2759
STATE OF TEXAS
04/15/15
Steven M. Ham
THIS DOCUMENT WAS PREPARED UNDER 22 TAC 537.117(a)(2) AND IS NOT TO BE USED FOR REGULATORY APPROVAL, PERMITTING, OR CONSTRUCTION PURPOSES.

NO.	DATE	REVISIONS
NO.1	4.15.15	SECOND PERMIT REVIEW SUBMITTAL
NO.2	4.29.15	THIRD PERMIT REVIEW SUBMITTAL

CITY
CITY
RECOM'D

CLIENT | OWNER
CITY OF LEANDER
TEXAS

PROJECT
VETERAN'S PARK

SHEET TITLE
DETAILS
PAVER PLAZA DEDUCT

PROJECT No.
0674-2-017

SHEET No. L-15D
18 OF 27

KEY

1. COMPACTED SUBGRADE TO 95% MAX. DENSITY.
2. SAND BED - 2" THICK MINIMUM LEVELING SAND OR DRY SCREENINGS.
3. CONC. PAVERS - 2"X4"X8" CONCRETE BRICK PAVERS. REFER TO DET. 1 SHT. L-15 FOR PATTERN/LAYOUT/COLOR. MORTAR IN-PLACE, SAND JOINTS; SUBMIT ONE PAVER SAMPLE OF EACH COLOR FOR APPROVAL BY LANDSCAPE ARCHITECT.
4. PAVER BED - 4" CONCRETE, 3000 PSI, CONCRETE WITH #3 BARS AT 18" O.C.E.W. REINF. TO BE PLACED 3/4" MIN. - 1" MAX. BELOW FINISHED SURFACE ON PLASTIC CHAIRS.
5. FLAGPOLE BASE - PER DIMENSIONS SHOWN, 3000 PSI CONC., TIE #4 BARS TO FOOTING. IMBED 1" X 40" L-BOLTS INTO FOOTING AS SHOWN. VENEER WITH 2" LIMESTONE, SMOOTH FINISH AND JOINT AS SHOWN, COLOR: CORDOVA CREAM. BUTT JOINT PANELS AT CORNERS AND MORTAR TO MATCH STONE, RAKE JOINTS FLUSH WITH ROCK FACE FOR SEAMLESS LOOK. BASE AND FOOTING MAY BE POURED MONOLITHIC.
6. CONCRETE FOOTING - 2'-8"x3'-3", 3000 PSI FOOTING, #4 HORZ. BARS AT 8" O.C.E.W.; W/ (2) #4 VERT. BARS PROJECTING INTO BASE, #3 TIES AT 12" O.C. SLAB AND FOOTING MAY BE POURED MONOLITHIC.
7. EXPANSION JOINT - 3/4" CEDAR FULL DEPTH TO SUPPORT BACKER ROD/ZIP-STRIP, SEAL WITH SL-1 JOINT SEALANT; 1/2" DIA. SMOOTH DOWEL 18" LENGTH AT 24" O.C. MIN. TO ADJACENT WALKWAY, GREASE AND CAP FULL LENGTH OF EXPOSED DOWEL. REF. SITE PLAN FOR JOINT LOCATIONS.
8. FLAG POLE - 25' DARK BRONZE ANODIZED METAL FLAGPOLE W/ SPUN BRONZETONE COLLAR, INSTALLED PER MANUFACTURER'S SPECS. REF. SPECS FOR MOUNTING INSTRUCTIONS AND PRODUCT DETAILS.
9. UPLIGHT QTY. 2, MODEL #33602.023 - TOP OF FIXTURE TO BE FLUSH WITH TOP OF CAST STONE BAND, CENTER LIGHT WITH FLAGPOLE ALIGNMENT, PROVIDE ELECTRIC JUNCTION BOX AND CONDUIT AS REQUIRED WITHIN STONE WALL. REF. ELECTRIC PLANS FOR UPLIGHT SPEC. AND ELECTRICAL.
10. CAST STONE BAND - PER PLAN DIMENSIONS, MULTIPLE PIECES MAY BE USED WITH BUTT JOINTS ONLY, MIN. CUT LENGTH 12", SUBMIT COLOR SAMPLES FOR SELECTION BY LANDSCAPE ARCH.
11. RAILING - EXISTING RAILING TO BE REINSTALLED PER MANUFACTURER'S RECOMMENDATIONS. SET POSTS 18" MIN. IN CONC. FOOTING. REF. DET. 1 SHT. L-15 FOR ALIGNMENT, PAINT WELDS TO MATCH EXISTING. REF. SHT. L-19 FOR FINISHING NOTES.
12. 1/2" PVC WEEP @ 2'O.C.
13. ADJACENT CONCRETE WALKWAY REF. DET. 3 SHT. L-14
14. EXISTING QUARRY BLOCK RETAINING WALL

FLAG POLE SUPPLIER
AIRBORNE FLAG & FLAGPOLE
CONTACT: DUSTIN WHITE
P: 210-520-3524
WWW.AIRBORNEFLAGDIRECT.COM
OR APPROVED EQUAL BY
LANDSCAPE ARCH.

LIGHTING SUPPLIER
ERT LIGHTING
CONTACT: STEPHEN DRAKE
P:512-419-9142
WWW.ERTLIGHTING.COM
OR APPROVED EQUAL BY
LANDSCAPE ARCH.

STONE SUPPLIER:
SOUTHWEST MONUMENT & SIGN
512-331-1522 (PHONE)
512-335-3397 (FAX)
OR APPROVED EQUAL
BY LANDSCAPE ARCH.

PAVER MANUFACTURER:
BELGARD
OLDCASTLE TEXAS
400 JEWELL DRIVE
WACO, TX 76712
512-677-8789 (PHONE)
WWW.BELGARDCOMMERCIAL.COM
OR APPROVED EQUAL BY
LANDSCAPE ARCH.

NOTE: VERIFY LIGHT FIXTURE ORIENTATION WITH OWNER/LANDSCAPE ARCHITECT PRIOR TO PLACEMENT OF JUNCTION BOXES FOR FIXTURES.

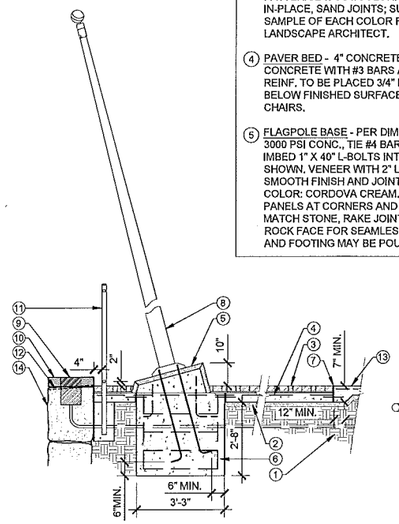

FLAG PEDESTAL PLAN

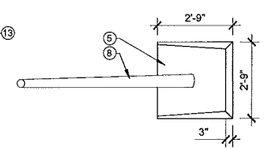

FLAG PEDESTAL ELEVATION: NTS

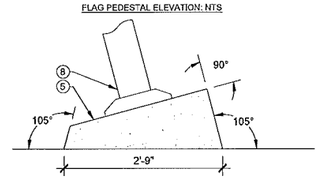

1 FLAG AT OVERLOOK
SCALE: 3/8" = 1'-0"

KEY

1. COMPACTED SUBGRADE TO 95% MAX. DENSITY.
2. SAND BED - 2" THICK MINIMUM LEVELING SAND OR DRY SCREENINGS.
3. BRICK PAVER BED - 4" CONCRETE, 3000 PSI, CONCRETE WITH #3 BARS AT 18" O.C.E.W. REINF. TO BE PLACED 3/4" MIN. - 1" MAX. BELOW FINISHED SURFACE ON PLASTIC CHAIRS.
4. PAVER EDGE RESTRAINT - REF. DET. 2 SHT. L-20
5. CONC. PAVERS - 2"X4"X8" CONCRETE BRICK PAVERS. REFER TO DET. 1 SHT. L-15 FOR PATTERN/LAYOUT. MORTAR IN-PLACE, SAND JOINTS; SUBMIT ONE PAVER SAMPLE OF EACH COLOR FOR APPROVAL BY LANDSCAPE ARCHITECT.
6. EXPANSION JOINT - 3/4" CEDAR FULL DEPTH TO SUPPORT BACKER ROD/ZIP-STRIP, SEAL WITH SL-1 JOINT SEALANT (COLOR TO MATCH CONCRETE / PAVERS); 1/2" DIA. SMOOTH DOWEL 18" LENGTH AT 24" O.C. MIN. TO ADJACENT WALKWAY, GREASE AND CAP FULL LENGTH OF EXPOSED DOWEL. REF. SITE PLAN FOR JOINT LOCATIONS.
7. PLANTING BED/TREE WELL
8. ADJACENT CONCRETE WALKWAY REF. DET. 3 SHT. L-14

PAVER MANUFACTURER:
BELGARD
OLDCASTLE TEXAS
400 JEWELL DRIVE
WACO, TX 76712
512-677-8789 (PHONE)
WWW.BELGARDCOMMERCIAL.COM
OR APPROVED EQUAL BY
LANDSCAPE ARCH.

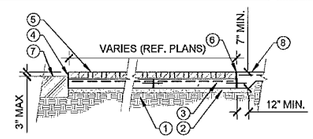

2 PAVERS AT TREEWELL
SCALE: NTS

KEY

1. COMPACTED SUBGRADE TO 95% MAX. DENSITY.
2. 2" THICK MINIMUM SAND OR DRY SCREENING LEVELING BED.
3. CONCRETE RIBBON CURB - 3000 PSI MIN., (2) #4 BARS CONTINUOUS, TIE HORIZ. W/ #3 BARS EVERY 18" O.C.
4. COLD JOINT - 1/2" DIA. SMOOTH DOWEL 18" LENGTH AT 24" O.C. MIN., TO ADJACENT PAVEMENT, GREASE AND CAP FULL LENGTH OF EXPOSED DOWEL.
5. ADJACENT PAVER PLAZA, REF. DET. 1 SHT. L-17
6. ADJACENT PLANTING AREA, FINISHED GRADE 1" BELOW TOP OF CURB.

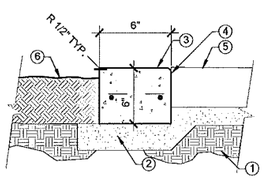

3 RIBBON CURB
SCALE: NTS

KEY

1. COMPACTED SUBGRADE TO 95% MAX. DENSITY.
2. SAND BED - 2" THICK MINIMUM LEVELING SAND OR DRY SCREENINGS.
3. ADJACENT CONCRETE WALKWAY REF. DET. 3 SHT. L-14
4. EXPANSION JOINT - 3/4" CEDAR FULL DEPTH TO SUPPORT BACKER ROD/ZIP-STRIP, SEAL WITH SL-1 JOINT SEALANT (COLOR TO MATCH CONCRETE / PAVERS); 1/2" DIA. SMOOTH DOWEL 18" LENGTH AT 24" O.C. MIN. TO ADJACENT WALKWAY, GREASE AND CAP FULL LENGTH OF EXPOSED DOWEL. REF. SITE PLAN FOR JOINT LOCATIONS.
5. PAVER BED - 4" CONCRETE, 3000 PSI, CONCRETE WITH #3 BARS AT 18" O.C.E.W. REINF. TO BE PLACED 3/4" MIN. - 1" MAX. BELOW FINISHED SURFACE ON PLASTIC CHAIRS.
6. CONC. PAVERS - 2"X4"X8" CONCRETE BRICK PAVERS, RUNNING BOND. COLOR: VARIES. REF. DETAILS. MORTAR IN-PLACE, SAND JOINTS; SUBMIT ONE PAVER SAMPLE FOR APPROVAL BY LANDSCAPE ARCHITECT.
7. FINISH GRADE

PAVER MANUFACTURER:
BELGARD
OLDCASTLE TEXAS
400 JEWELL DRIVE
WACO, TX 76712
512-677-8789 (PHONE)
WWW.BELGARDCOMMERCIAL.COM
OR APPROVED EQUAL BY LANDSCAPE ARCH.

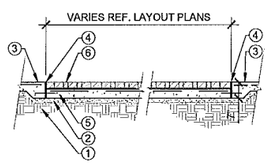

4 CONCRETE PAVERS
SCALE: NTS

LITTER RECEPTACLE MANUFACTURER:
PARIS EQUIPMENT MANUFACTURING LIMITED
CONTACT: CARL SIMMONS
512-426-5622 (PHONE)
CARL@PLAYWELLGROUP.COM (EMAIL)
OR APPROVED EQUAL BY
LANDSCAPE ARCH.

paris
EQUIPMENT MANUFACTURING LTD.

SPECIFICATIONS

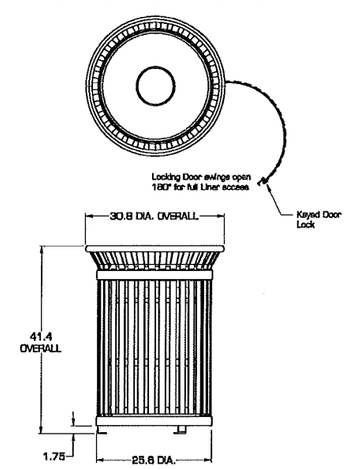

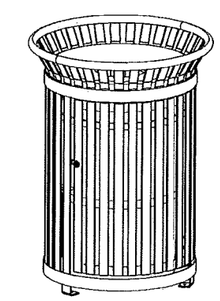

MATERIAL SPECIFICATIONS
SLATS, RINGS & BRACKETS - 3/16 HRPO
INSIDE RING - Ø 1/2 HR ROD
TOP RING - Ø 1-5/16 x 1/8" HR TUBE
STANDARD LINER - POLYETHYLENE
[OPTIONAL LINER - GALVANIZED STEEL]
LID - 16 GA GALV
[OPTIONAL LANYARD FOR LID - STAINLESS STEEL BRAIDED CABLE]
INCLUDE OPTIONAL CIGARETTE BUTT RECEPTACLE
NOTE: Optional Inground Leg Mounting Kit Available (P-Leg)

PREMIER 34 GALLON FLARE TOP LITTER RECEPTACLE with DOOR - Model: 71149100

SHEET 1 OF1 SCALE: 1:16 27MAY04 REV:-

UNLESS OTHERWISE SPECIFIED, DIMENSIONS ARE IN INCHES

5 LITTER RECEPTACLE
SCALE: NTS

BAKER-AICKLEN & ASSOCIATES, INC.
5627 WEST LIBERTY AVENUE
ROUND ROCK TEXAS 78664
(512) 244-9523
ENGINEERING FIRM # F-3443
SURVEYING FIRM # 10023100
LANDSCAPE ARCHITECTS
ENGINEERS | SURVEYORS | PLANNERS
ROUND ROCK - CEDAR PARK
TBAE# 1787

DESIGNED: BH/GF DRAWN: BH/GF REVIEWED: BH

REGISTERED LANDSCAPE ARCHITECT BRIAN HOWARD MAY 04/15/15

NO.	DATE	REVISIONS	
NO.1	4.15.15	SECOND PERMIT REVIEW SUBMITTAL	CITY
NO.2	4.29.15	THIRD PERMIT REVIEW SUBMITTAL	CITY
			RECOM'D

CLIENT | OWNER: CITY OF LEANDER TEXAS

PROJECT: VETERAN'S PARK

SHEET TITLE: DETAILS

PROJECT No. 0674-2-017

SHEET No. L-16

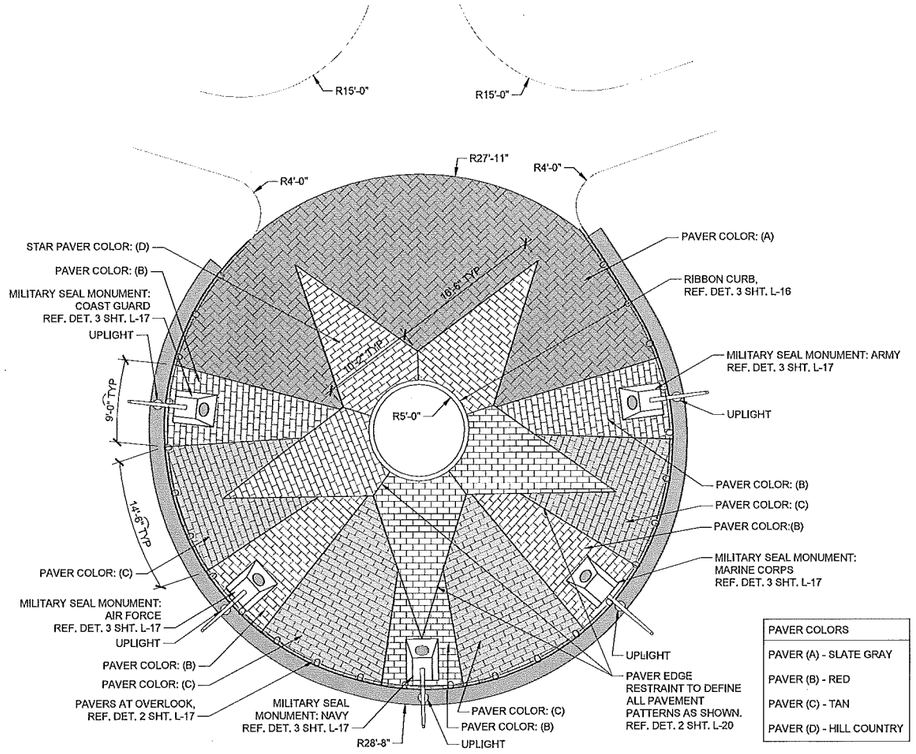

PAVER COLORS
PAVER (A) - SLATE GRAY
PAVER (B) - RED
PAVER (C) - TAN
PAVER (D) - HILL COUNTRY

1 MILITARY FLAG OVERLOOK

SCALE: 1/8" = 1'-0"

KEY

1. COMPACTED SUBGRADE TO 95% MAX. DENSITY.
2. SAND BED - 2" THICK MINIMUM LEVELING SAND OR DRY SCREENINGS.
3. PAVER BED - 4" CONCRETE, 3000 PSI, CONCRETE WITH #3 BARS AT 18" O.C.E.W. REINF. TO BE PLACED 3/4" MIN. - 1" MAX. BELOW FINISHED SURFACE ON PLASTIC CHAIRS.
4. EXPANSION JOINT - 3/4" CEDAR FULL DEPTH TO SUPPORT BACKER ROD/ZIP-STRIP, SEAL WITH SL-1 JOINT SEALANT (COLOR TO MATCH CONCRETE / PAVERS); 1/2" DIA. SMOOTH DOWEL 18" LENGTH AT 24" O.C. MIN. TO ADJACENT WALKWAY, GREASE AND CAP FULL LENGTH OF EXPOSED DOWEL. REF. SITE PLAN FOR JOINT LOCATIONS.
5. CONC. PAVERS - 2"X4"X8" CONCRETE BRICK PAVERS, REFER TO DETAIL 1 SHT. L-17 FOR PATTERN/LAYOUT/COLOR. MORTAR IN-PLACE, SAND JOINTS; SUBMIT ONE PAVER SAMPLE OF EACH COLOR FOR APPROVAL BY LANDSCAPE ARCHITECT.
6. RAILING - EXISTING RAILING TO BE REINSTALLED PER MANUFACTURER'S RECOMMENDATIONS. SET POSTS 18"MIN. IN CONC. FOOTING. REF. DET. 1 SHT. L-17 FOR ALIGNMENT, PAINT WELDS TO MATCH EXISTING. REF. FINISH NOTES IN DET. 2, SHT. L-19
7. CAST STONE BAND - PER PLAN DIMENSIONS, MULTIPLE PIECES MAY BE USED WITH BUTT JOINTS ONLY, MIN. CUT LENGTH 12", SUBMIT COLOR SAMPLES FOR SELECTION BY LANDSCAPE ARCH.
8. 1/2" PVC WEEP @ 2'O.C.
9. ADJACENT CONCRETE WALKWAY REF. DET. 3 SHT. L-14
10. EXISTING QUARRY BLOCK RETAINING WALL

PAVER MANUFACTURER:
BELGARD
OLDCASTLE TEXAS
400 JEWELL DRIVE
WACO, TX 76712
512-677-8789 (PHONE)
WWW.BELGARDCOMMERCIAL.COM
OR APPROVED EQUAL BY
LANDSCAPE ARCH.

CAST STONE SUPPLIER:
SOUTHWEST MONUMENT & SIGN
512-331-1522 (PHONE)
512-335-3397 (FAX)
OR APPROVED EQUAL
BY LANDSCAPE ARCH.

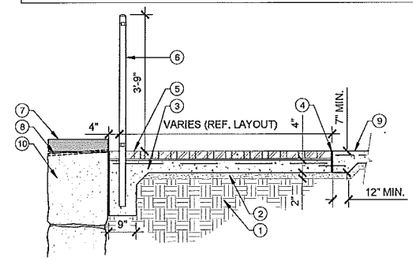

2 PAVERS AT OVERLOOK

SCALE: 1/2" = 1'-0"

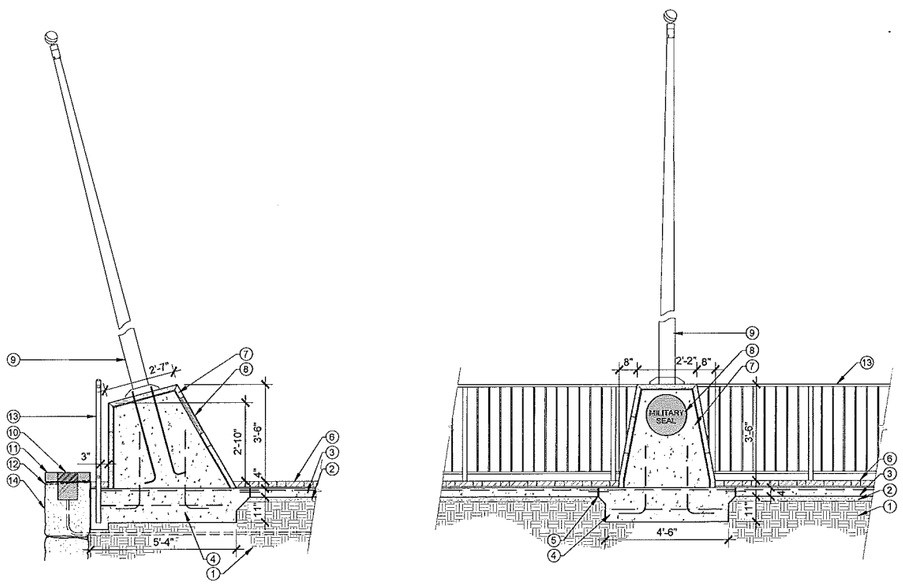

3 MILITARY SEAL MONUMENT

SCALE: 3/8" = 1'-0"

KEY

1. COMPACTED SUBGRADE TO 95% MAX. DENSITY.
2. SAND BED - 2" THICK MINIMUM LEVELING SAND OR DRY SCREENINGS.
3. BRICK PAVER BED - 4" CONCRETE, 3000 PSI, CONCRETE WITH #3 BARS AT 18" O.C.E.W. REINF. TO BE PLACED 3/4" MIN. - 1" MAX. BELOW FINISHED SURFACE ON PLASTIC CHAIRS.
4. CONCRETE FOOTING - PER DIMENSIONS SHOWN, 3000 PSI FOOTING, #4 HORZ. BARS AT 18" O.C.E.W. W/ (4) #4 VERT. BARS EQUALLY SPACED AND PROJECTING 18" MIN. INTO MONUMENT.
5. EXPANSION JOINT - 3/4" CEDAR FULL DEPTH TO SUPPORT BACKER ROD/ZIP-STRIP, SEAL WITH SL-1 JOINT SEALANT; 1/2" DIA. SMOOTH DOWEL 18" LENGTH AT 24" O.C. MIN. TO ADJACENT WALKWAY, GREASE AND CAP FULL LENGTH OF EXPOSED DOWEL. REF. SITE PLAN FOR JOINT LOCATIONS.
6. CONC. PAVERS - 2"X4"X8" CONCRETE BRICK PAVERS DET. 1 SHT. L-17 FOR PATTERN/ LAYOUT. MORTAR IN-PLACE, SAND JOINTS; SUBMIT ONE PAVER SAMPLE OF EACH COLOR FOR APPROVAL BY LANDSCAPE ARCHITECT.
7. FLAGPOLE BASE - PER DIMENSIONS SHOWN, 3000 PSI CONC., TIE #4 BARS TO FOOTING, PROJECT 18" MIN. INTO BASE. IMBED 1" X40" L-BOLTS INTO FOOTING AS SHOWN. VENEER WITH 2" LIMESTONE, SMOOTH FINISH AND JOINT AS SHOWN, COLOR: CORDOVA CREAM. BUTT JOINT PANELS AND MORTAR TO MATCH STONE, RAKE JOINTS FLUSH WITH ROCK FACE FOR SEAMLESS LOOK. CONCRETE BASE AND FOOTING MAY BE POURED MONOLITHIC. SUBMIT STONE SAMPLE FOR APPROVAL BY LANDSCAPE ARCHITECT
8. MILITARY SEAL - 18" DIA. BRONZE MILITARY SEAL RECESSED AND FLUSH WITH FACE OF STONE. REF. DET. 1 SHT. L-17 FOR MILITARY SEAL ASSIGNMENT. SUBMIT SAMPLE FOR APPROVAL BY LANDSCAPE ARCHITECT.
9. FLAG POLE - 20' DARK BRONZE ANODIZED METAL FLAGPOLE W/ SPUN BRONZETONE COLLAR, INSTALLED PER MANUFACTURER'S SPECS. REF. SPECS FOR MOUNTING INSTRUCTIONS AND PRODUCT DETAILS.
10. UPLIGHT QTY. 5; MODEL #33602.023 - TOP OF FIXTURE TO BE FLUSH WITH TOP OF CAST STONE BAND, CENTER LIGHT WITH FLAGPOLE ALIGNMENT. PROVIDE ELECTRIC JUNCTION BOX AND CONDUIT AS REQUIRED WITHIN STONE WALL. REF. ELECTRIC PLANS FOR UPLIGHT SPEC. AND ELECTRICAL.
11. CAST STONE BAND - PER PLAN DIMENSIONS, MULTIPLE PIECES MAY BE USED WITH BUTT JOINTS ONLY, MIN. CUT LENGTH 12", SUBMIT COLOR SAMPLES FOR SELECTION BY LANDSCAPE ARCHITECT.
12. 1/2" PVC WEEP @ 2'O.C.
13. RAILING - EXISTING RAILING TO BE REINSTALLED PER MANUFACTURER'S RECOMMENDATIONS. SET POSTS 18" MIN. IN CONC. FOOTING. REF. DET. 1 SHT. L-17 FOR ALIGNMENT, PAINT WELDS TO MATCH EXISTING. REF. FINISH NOTES IN DET. 2, SHT. L-19
14. EXISTING QUARRY BLOCK RETAINING WALL

PAVER MANUFACTURER:
BELGARD
OLDCASTLE TEXAS
400 JEWELL DRIVE
WACO, TX 76712
512-677-8789 (PHONE)
WWW.BELGARDCOMMERCIAL.COM
OR APPROVED EQUAL BY
LANDSCAPE ARCH.

FLAG POLE SUPPLIER
AIRBORNE FLAG & FLAGPOLE
CONTACT: DUSTIN WHITE
P: 210-520-3524
WWW.AIRBORNEFLAGDIRECT.COM
OR APPROVED EQUAL BY
LANDSCAPE ARCH.

LIGHTING SUPPLIER
ERT LIGHTING
CONTACT: STEPHEN DRAKE
P:512-419-9142
WWW.ERTLIGHTING.COM
OR APPROVED EQUAL BY
LANDSCAPE ARCH.

MILITARY SEAL AND STONE SUPPLIER:
SOUTHWEST MONUMENT & SIGN
512-331-1522 (PHONE)
512-335-3397 (FAX)
OR APPROVED EQUAL
BY LANDSCAPE ARCH.

NOTE: VERIFY LIGHT FIXTURE ORIENTATION WITH OWNER/LANDSCAPE ARCHITECT PRIOR TO PLACEMENT OF JUNCTION BOXES FOR FIXTURES.

BAKER-AICKLEN & ASSOCIATES, INC.
527 WEST LIBERTY AVENUE
ROUND ROCK, TEXAS 78664
(512) 218-2667
ENGINEERING FIRM # F-945
SURVEY FIRM # 10023-10
ROUND ROCK - CEDAR PARK
TBAE# 17257

DESIGNED: BH/GF DRAWN: BH/GF REVIEWED: BH

REGISTERED LANDSCAPE ARCHITECT BRYAN HOLLOWAY 2759 STATE OF TEXAS 04/15/15

NO.	DATE	REVISIONS	
NO.1	4.15.15	SECOND PERMIT REVIEW SUBMITTAL	CITY
NO.2	4.29.15	THIRD PERMIT REVIEW SUBMITTAL	CITY
			REC'D/MO

CLIENT | OWNER: CITY OF LEANDER TEXAS

PROJECT: VETERAN'S PARK

SHEET TITLE: DETAILS

PROJECT No. 0674-2-017

SHEET No. L-17

20 OF 27

FLAG POLE SUPPLIER	LIGHTING SUPPLIER	CUT STONE SUPPLIER:	PAVER MANUFACTURER:
AIRBORNE FLAG & FLAGPOLE CONTACT: DUSTIN WHITE P: 210-520-3524 WWW.AIRBORNEFLAGDIRECT.COM OR APPROVED EQUAL BY LANDSCAPE ARCH.	ERT LIGHTING CONTACT: STEPHEN DRAKE P:512-419-9142 WWW.ERTLIGHTING.COM OR APPROVED EQUAL BY LANDSCAPE ARCH.	SOUTHWEST MONUMENT & SIGN 512-331-1522 (PHONE) 512-335-3397 (FAX) OR APPROVED EQUAL BY LANDSCAPE ARCH.	BELGARD OLDCASTLE TEXAS 400 JEWELL DRIVE WACO, TX 76712 512-677-8789 (PHONE) WWW.BELGARDCOMMERCIAL.COM OR APPROVED EQUAL BY LANDSCAPE ARCH.

NOTES: VERIFY LIGHT FIXTURE ORIENTATION WITH OWNER/LANDSCAPE ARCHITECT PRIOR TO PLACEMENT OF JUNCTION BOXES FOR FIXTURES.

LANDSCAPE ARCHITECT TO APPROVE FORMWORK AND LAYOUT PRIOR TO PLACEMENT OF PAVERS

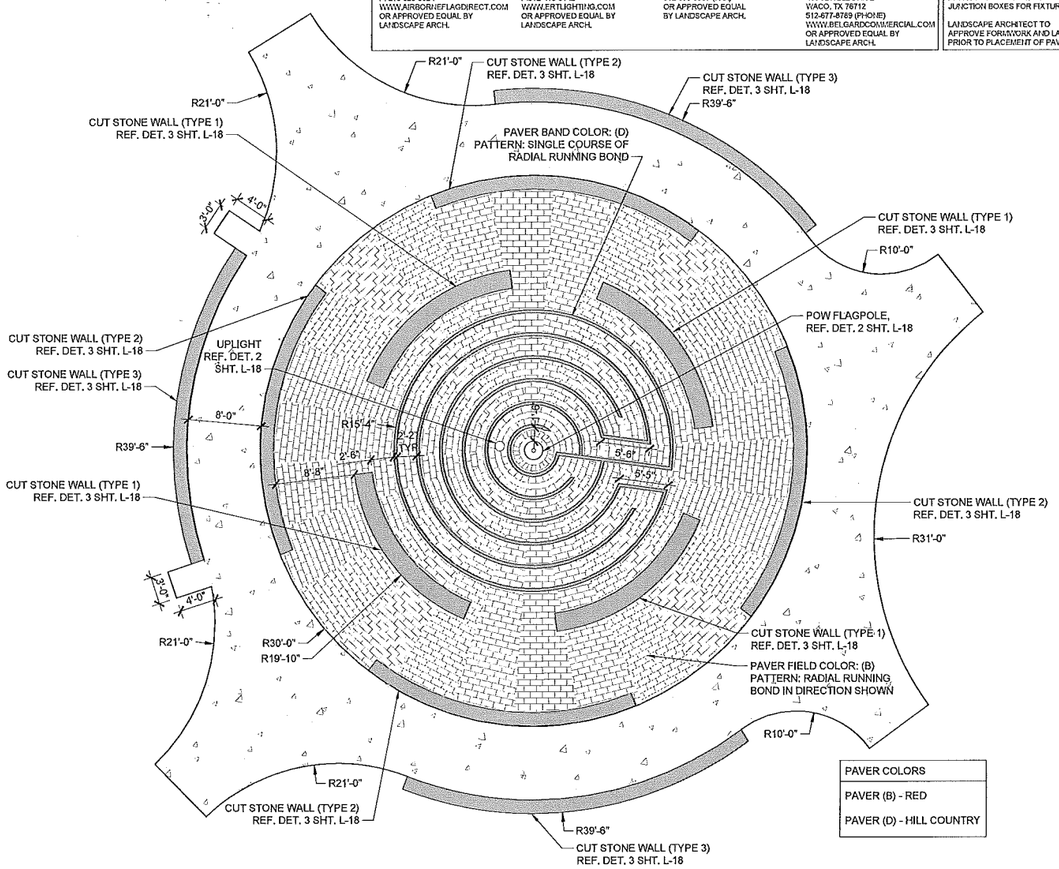

PAVER COLORS
PAVER (B) - RED
PAVER (D) - HILL COUNTRY

1 LABYRINTH
SCALE: 1/8" = 1'-0"

KEY

1. SEALANT
2. 4 HARDWOOD WEDGES
3. DRY SAND TAMPED IN PLACE AFTER PLUMBING
4. GROUND SLEEVE (16 GA. CORR GALVANIZED STEEL)
5. UPLIGHT QTY. 1, MODEL #33602.023 - TOP OF FIXTURE TO BE FLUSH WITH TOP OF CONC. PAVERS. SET IN 3" CONCRETE, 3000 PSI. REF. DET. 1 SHT. L-18 FOR LOCATION. REF. ELECTRIC PLANS FOR UPLIGHT SPEC. AND ELECTRICAL.
6. FLAG POLE - 20' DARK BRONZE ANODIZED METAL FLAGPOLE W/ SPUN BRONZETONE COLLAR, INSTALLED PER MANUFACTURER'S SPECS. REF. SPECS FOR MOUNTING INSTRUCTIONS AND PRODUCT DETAILS.
7. FLAGPOLE BASE - PER DIMENSIONS SHOWN, LIMESTONE, SMOOTH FINISH, COLOR: CORDOVA CREAM, BUTT JOINT PANELS AND MORTAR TO MATCH STONE, RAKE JOINTS FLUSH WITH ROCK FACE FOR SEAMLESS LOOK. BASE AND FOOTING MAY BE POURED MONOLITHIC. SUBMIT STONE SAMPLE FOR APPROVAL BY LANDSCAPE ARCHITECT
8. CONCRETE FOOTING - 3000 PSI CONCRETE PER DIMENSIONS SHOWN.
9. 4 STEEL WEDGES WELDED TO SLEEVE EACH AT 90° TO CENTER POLE
10. STEEL BASE PLATE
11. 3/4" DIA. STEEL LIGHTNING GROUND SPIKE WELDED TO SLEEVE
12. STEEL SUPPORT PLATE, 6" SQUARE WELDED TO SPIKE
13. ADJACENT PAVERS. REF. DET. 4 SHT. L-16
14. COMPACTED SUBGRADE TO 95% MAX. DENSITY

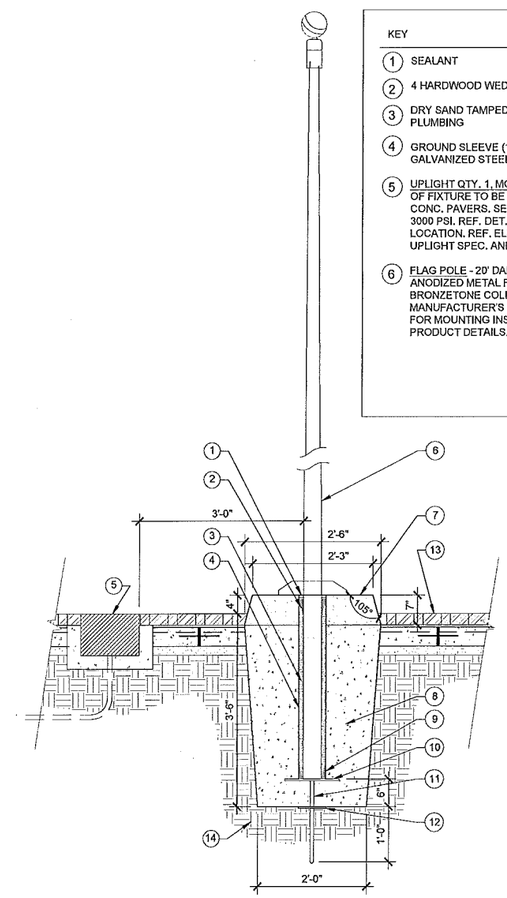

PAVER MANUFACTURER:
BELGARD
OLDCASTLE TEXAS
400 JEWELL DRIVE
WACO, TX 76712
512-677-8789 (PHONE)
WWW.BELGARDCOMMERCIAL.COM
OR APPROVED EQUAL BY
LANDSCAPE ARCH.

FLAG POLE SUPPLIER
AIRBORNE FLAG & FLAGPOLE
CONTACT: DUSTIN WHITE
P: 210-520-3524
WWW.AIRBORNEFLAGDIRECT.COM
OR APPROVED EQUAL BY
LANDSCAPE ARCH.

LIGHTING SUPPLIER
ERT LIGHTING
CONTACT: STEPHEN DRAKE
P:512-419-9142
WWW.ERTLIGHTING.COM
OR APPROVED EQUAL BY
LANDSCAPE ARCH.

STONE SUPPLIER:
SOUTHWEST MONUMENT & SIGN
512-331-1522 (PHONE)
512-335-3397 (FAX)
OR APPROVED EQUAL
BY LANDSCAPE ARCH.

NOTE: VERIFY LIGHT FIXTURE ORIENTATION WITH OWNER/LANDSCAPE ARCHITECT PRIOR TO PLACEMENT OF JUNCTION BOXES FOR FIXTURES.

2 POW FLAGPOLE
SCALE: 3/4" = 1'-0"

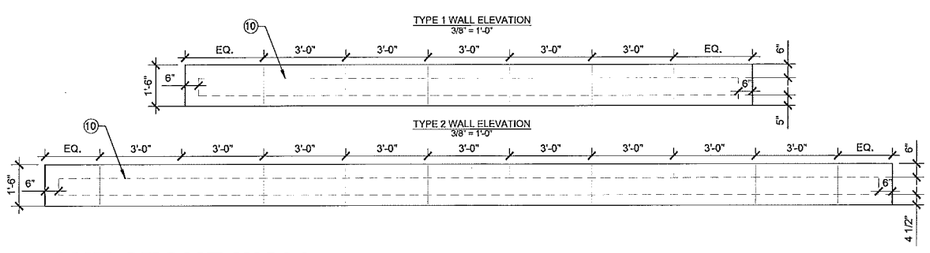

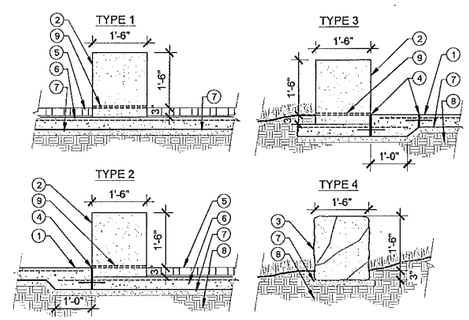

KEY

1. ADJACENT CONCRETE WALKWAY REF. DET. 3 SHT. L-14
2. CUT STONE WALL (TYPE 1, 2, 3) - SINGLE CUT OF STONE PER DIMENSIONS SHOWN, ALL SIDES OF BENCH TO BE SMOOTH. COLOR: LUEDERS ROUGHBACK LIMESTONE. CUT AND FIT PAVERS TO BASE OF WALL, WHEN APPLICABLE.
3. CUT STONE WALL (TYPE 4) - SINGLE CUT OF STONE PER DIMENSIONS SHOWN, SET ON SAND BED. SIDES OF WALL TO REMAIN ROUGH, SMOOTH TOP AND BOTTOM. COLOR: LUEDERS ROUGHBACK LIMESTONE.
4. EXPANSION JOINT - 3/4" CEDAR FULL DEPTH TO SUPPORT BACKER ROD/ZIP-STRIP, SEAL WITH SL-1 JOINT SEALANT (COLOR TO MATCH CONCRETE / PAVERS); 1/2" DIA. SMOOTH DOWEL 18" LENGTH AT 24" O.C. MIN. TO ADJACENT WALKWAY, GREASE AND CAP FULL LENGTH OF EXPOSED DOWEL. REF. SITE PLAN FOR JOINT LOCATIONS.
5. CONCRETE PAVERS - 2"X4"X8" CONCRETE PAVERS REFER DET. 1 SHT. L-18 FOR PATTERN/LAYOUT. MORTAR IN-PLACE, SAND JOINTS; SUBMIT ONE PAVER SAMPLE OF EACH COLOR FOR APPROVAL BY LANDSCAPE ARCHITECT.
6. CONCRETE PAVER BED - 4" CONCRETE, 3000 PSI, CONCRETE WITH #3 BARS AT 18" O.C.E.W. REINF. TO BE PLACED 3 / 4" MIN. - 1" MAX. BELOW FINISHED SURFACE ON PLASTIC CHAIRS.
7. SAND BED - 2" THICK MINIMUM LEVELING SAND OR DRY SCREENINGS.
8. COMPACTED SUBGRADE TO 95% MAX. DENSITY.
9. 1/2" PVC WEEP @ 2'O.C.
10. BOUNDARY FOR ENGRAVING AREA. REF. SPECS FOR ENGRAVING INFORMATION.

PAVER MANUFACTURER:
BELGARD
OLDCASTLE TEXAS
400 JEWELL DRIVE
WACO, TX 76712
512-677-8789 (PHONE)
WWW.BELGARDCOMMERCIAL.COM
OR APPROVED EQUAL BY
LANDSCAPE ARCH.

CUT STONE & ENGRAVING SUPPLIER:
SOUTHWEST MONUMENT & SIGN
512-331-1522 (PHONE)
512-335-3397 (FAX)
OR APPROVED EQUAL
BY LANDSCAPE ARCH.

3 CUT STONE WALL
SCALE: 1/2" = 1'-0"

BAKER-AICKLEN & ASSOCIATES, INC.
5627 WEST LIBERTY AVENUE
ROUND ROCK TEXAS 78664
(512) 244-9503
ENGINEERING FIRM # F-15
SURVEYING FIRM # 10023-10
ENGINEERS | SURVEYORS | GIS | PLANNERS | LANDSCAPE ARCHITECTS
ROUND ROCK - CEDAR PARK
TBAE# 7527

DESIGNED: BH/GF
DRAWN: BH/GF
REVIEWED: BH

REGISTERED LANDSCAPE ARCHITECT
BRADLEY HAYES
STATE OF TEXAS
2755
04/15/15

NO.	DATE	REVISIONS
NO.1	4.15.15	SECOND PERMIT REVIEW SUBMITTAL
NO.2	4.29.15	THIRD PERMIT REVIEW SUBMITTAL
		CITY
		CITY
		RECOM'D

CLIENT | OWNER: CITY OF LEANDER TEXAS

PROJECT: VETERAN'S PARK

SHEET TITLE: DETAILS

PROJECT No. 0674-2-017

SHEET No. L-18

21 OF 27

WALL ELEVATION

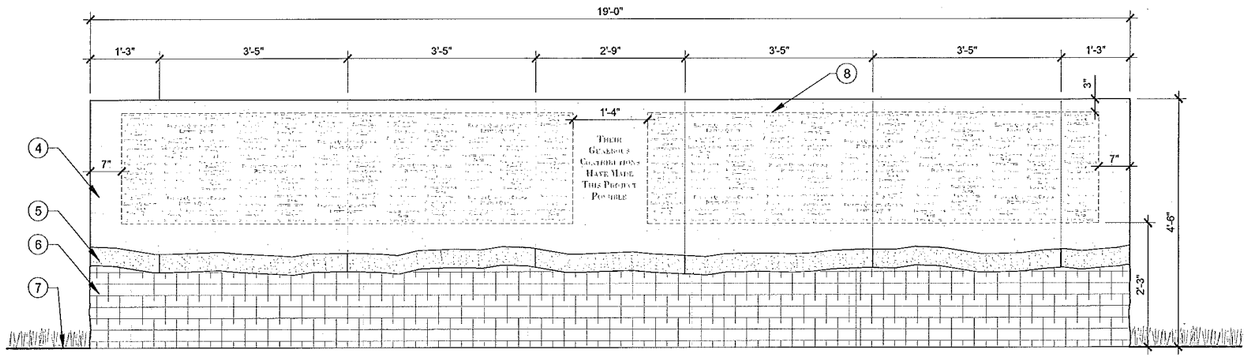

TYP. WALL SECTION

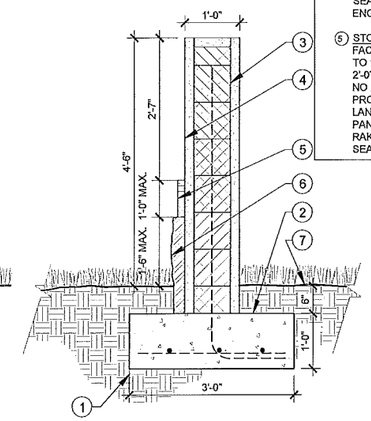

KEY

1. COMPACTED SUBGRADE TO 95% MAX. DENSITY.
2. CONCRETE FOOTING - PER DIMENSIONS SHOWN, 3000 PSI FOOTING, #3 HORZ. BARS AT 18" O.C. W/ (3) #5 BARS CONTINUOUS ALONG LENGTH OF FOOTING.
3. CMU REINF. - #6 VERT. BARS AT 24" O.C. MAX. TO TOP OF CMU WALL, BACKFILL WITH CONCRETE, 'L' BOTTOM OF BAR & PLACE MIN. 9" INTO FOOTING PRIOR TO POUR.
4. STONE VENEER (A) - SMOOTH CUT STONE PANELS, 2" THICK x 4' MAX. WIDE PER PANEL, NO HORIZONTAL JOINTS, COLOR: CORDOVA CREAM, PROVIDE SAMPLE FOR APPROVAL BY LANDSCAPE ARCHITECT. BUTT JOINT PANELS AND MORTAR TO MATCH STONE, RAKE JOINTS FLUSH WITH ROCK FACE FOR SEAMLESS LOOK. REF. SPECS FOR ENGRAVING LAYOUT.
5. STONE VENEER (B) - 1" THICK ROUGH CUT FACE STONE PANELS. HT. RANGE FROM 6" TO 1'-0". TOP OF VENEER NOT TO EXCEED 2'-0" FROM FINISH GRADE, REF. ELEVATION. NO HORIZONTAL JOINTS. COLOR: LUEDERS, PROVIDE SAMPLE FOR APPROVAL BY LANDSCAPE ARCHITECT, BUTT JOINT PANELS AND MORTAR TO MATCH STONE, RAKE JOINTS FLUSH WITH ROCK FACE FOR SEAMLESS LOOK.
6. STONE VENEER (C) - 2" THICK SPLIT FACE STONE PANELS. HT. RANGE FROM 1'-0" TO 1'-6", REF. ELEVATION. NO HORIZONTAL JOINTS. COLOR: LUEDERS ROUGHBACK LIMESTONE. PROVIDE SAMPLE FOR APPROVAL BY LANDSCAPE ARCHITECT, BUTT JOINTS, MIN CUT LENGTH 3'. MORTAR TO MATCH STONE, RAKE JOINTS FLUSH WITH ROCK FACE FOR SEAMLESS LOOK.
7. FINISH GRADE
8. BOUNDARY FOR ENGRAVING AREA. REF. SPECS FOR ENGRAVING INFORMATION.

STONE AND ENGRAVING SUPPLIER:
SOUTHWEST MONUMENT & SIGN
512-331-1522 (PHONE)
512-335-3397 (FAX)
OR APPROVED EQUAL
BY LANDSCAPE ARCH.

1 DONOR WALL
SCALE: 3/4" = 1'-0"

RUNNING SECTION / ELEVATION

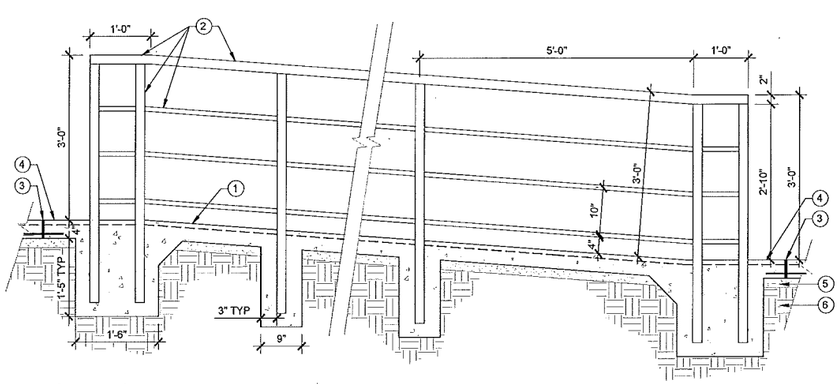

TYPICAL CROSS SECTION / ELEVATION

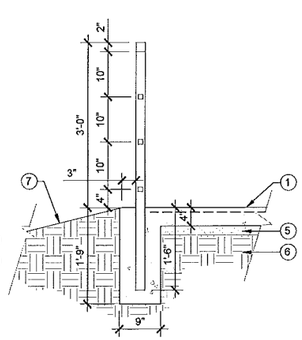

KEY

1. 4" CONCRETE, 3000 PSI, MEDIUM BROOM FINISH PERPENDICULAR TO DIRECTION OF TRAVEL, REINF. W/ #4 BARS AT 18" O.C.E.W TO BE PLACED 3/4"-1" MAX. BELOW FINISHED SURFACE ON PLASTIC CHAIRS.
2. HANDRAIL - 2" O.D. GALVANIZED SQUARE STEEL POSTS FABRICATED PER DIMENSIONS SHOWN. POSTS REQUIRED AT END OF HANDRAIL AS SHOWN AND AT 5 FT. O.C. MAX. FOR ENTIRE RAMP LENGTH RUN. HANDRAIL TO BE CONTINUOUS FOR RAMP RUN. PROVIDE 1" O.D. SQUARE RAILS AT 10"O.C. ENTIRE LENGTH OF RAIL BETWEEN TOP AND BOTTOM RAIL. BOTTOM RAIL 4" ABOVE FINISHED GRADE MAX. SET POSTS IN SLEEVES WITH NON-SHRINK GROUT. FINISH PER WELDING AND FINISH NOTES. SUBMIT SHOP DRAWINGS FOR APPROVAL BY LANDSCAPE ARCHITECT.
3. EXPANSION JOINT - 3/4" CEDAR FULL DEPTH TO SUPPORT BACKER ROD/ZIP-STRIP, SEAL WITH SL-1 JOINT SEALANT (COLOR TO MATCH CONCRETE); 1/2" DIA. SMOOTH DOWEL 18" LENGTH AT 18" O.C. MIN., GREASE AND CAP FULL LENGTH OF EXPOSED DOWEL. DOWEL TO ADJACENT WALKWAYS. REF. SITE PLAN FOR LOCATIONS.
4. ADJACENT 4" CONCRETE WALKWAY REF. DET. 3 SHT. L-14
5. 2" THICK MINIMUM SAND OR DRY SCREENING LEVELING BED.
6. COMPACTED SUBGRADE TO 95% MAX. DENSITY.
7. FINISH GRADE

RAILING SUPPLIER:
NORTHWEST FENCE & IRON
12306 TECHNOLOGY BLVD.
AUSTIN, TX 78727
P: 512-219-5901
OR APPROVED EQUAL BY
LANDSCAPE ARCH.

WELDING/ FINISHING NOTES (APPLIES TO ALL DETAILS):

GENERAL
SHOP DRAWINGS REQUIRED FOR ALL METAL FABRICATION.

WELDS
1. ALL SHOP AND FIELD WELDS SHALL BE MADE BY WELDERS WHO HAVE BEEN QUALIFIED AND CERTIFIED TO MAKE THE REQUIRED WELDS WITHIN THE PREVIOUS YEAR IN ACCORDANCE WITH THE LATEST AMERICAN WELDING SOCIETY SPECIFICATIONS AWS D.I.I.
2. ALL WELDS SHALL BE FULL PENETRATION WELDS ALL AROUND UNLESS NOTED.
3. GRIND AND WELD SPLATTER SMOOTH.
4. GRIND ALL WELDS SMOOTH.
5. REMOVE ALL SLAG PRIOR TO PAINTING.

PRIME PAINTING
1. THOROUGHLY CLEAN ALL SURFACES OF DIRT, SCALE, OR OTHER FOERIGN MATERIAL.
2. PRIME ALL METAL SURFACES WITH ONE COAT RED OXIDE PRIMER.

FINISH PAINTING
1. LIGHTLY SAND ALL SURFACES TO BE PAINTED.
2. PAINT OR POWER-COAT WITH SHERWIN-WILLIAMS INDUSTRIAL COATING. COLOR: BLACK TO MATCH EXISTING OR APPROVED EQUAL.

2 RAMP
SCALE: 3/4" = 1'-0"

BAKER-AICKLEN & ASSOCIATES, INC.
5627 WEST LIBERTY AVENUE
ROUND ROCK, TEXAS 78664
(512) 238-1200
ENGINEERING FIRM # F-475
SURVEY FIRM # 10023112
TBAE# 17207
ENGINEERING | SURVEYING | PLANNING | LANDSCAPE ARCHITECTS
ROUND ROCK - CEDAR PARK

DESIGNED: BHGF DRAWN: BHGF REVIEWED: BH

REGISTERED LANDSCAPE ARCHITECT BRYAN HAYS GRAY 2754 STATE OF TEXAS 04/15/15

NO.	DATE	REVISIONS	
NO.1	4.15.15	SECOND PERMIT REVIEW SUBMITTAL	CITY
NO.2	4.29.15	THIRD PERMIT REVIEW SUBMITTAL	CITY

REC'D/MD

CLIENT | OWNER: CITY OF LEANDER TEXAS

PROJECT: VETERAN'S PARK

SHEET TITLE: DETAILS

PROJECT No. 0674-2-017

SHEET No. L-19

22 OF 27

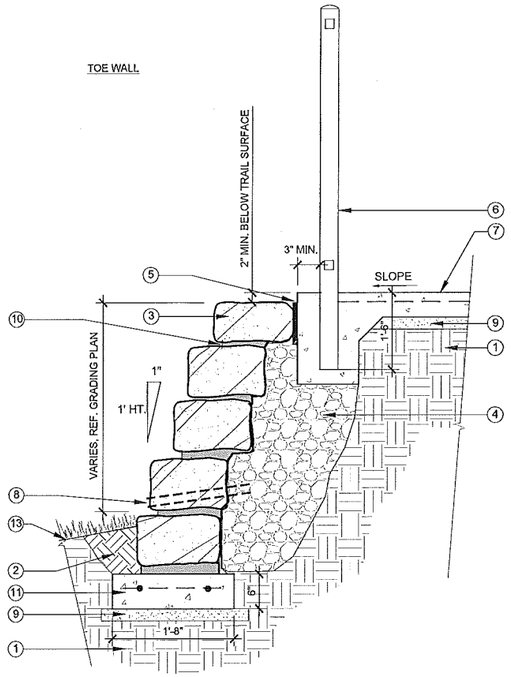

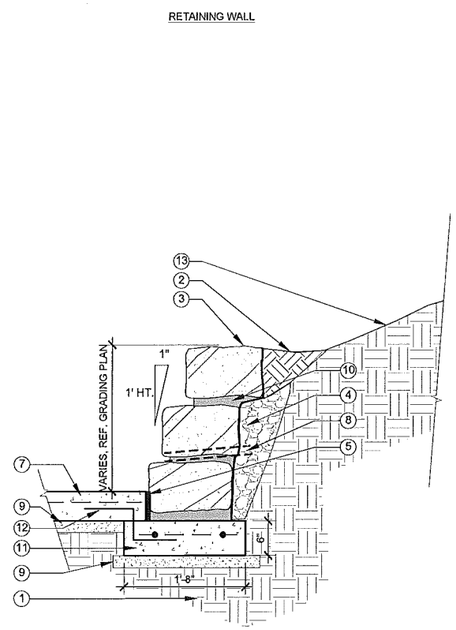

KEY

1. COMPACTED SUBGRADE TO 95% MAX. DENSITY.
2. COMPACTED BACKFILL
3. LUEDERS LIMESTONE CHOP BLOCK 24" LENGTH x 12" WIDTH X 6" HEIGHT MIN., BATTER WALL 1" PER 1' HT. SUBMIT MIN. 3 STONES FOR APPROVAL BY LANDSCAPE ARCHITECT
4. COMPACTED 3" MAX. AGGREGATE BACKFILL PLACED IN 12" LIFTS (FLEXIBLE BASE)
5. 1/2" PREMOLDED EXPANSION JOINT BETWEEN ALL WALLS/TRAILS.
6. RAILING - STYLE A-A (COMMERCIAL GRADE) INSTALLED PER MANUFACTURERS RECOMMENDATIONS. SET POSTS 18"MIN. IN CONC. FOOTING. REF. SITE PLAN FOR ALIGNMENT.
7. CONCRETE TRAIL WITH 12" X12" TURNDOWN AT EDGE. REF. TRAIL DET. 3 SHT. L-14
8. 1" PVC WEEP HOLE @ 8' O.C., WRAP BACK OF PIPE WITH GEOTEXTILE FABRIC
9. 2" DRY SCREENING OR SAND LEVELING BED.
10. MORTAR BETWEEN ALL COURSES,TYP.; RECESS MORTAR 2" MIN. FROM FACE OF BLOCK FOR DRY STACK APPEARANCE.
11. 6" HT. x 20" W. CONTINUOUS CONCRETE FOOTING. WITH (2) #4 REBAR CONTINUOUS
12. TIE TRAIL TO WALL FOOTING WITH #4 REBAR AT 4 FT.O.C
13. FINISHED GRADE

RAILING SUPPLIER:
NORTHWEST FENCE & IRON
12306 TECHNOLOGY BLVD.
AUSTIN, TX 78727
P: 512-219-5901
CONTACT: JOSH CLEMENTS
OR APPROVED EQUAL BY LANDSCAPE ARCHITECT

STONE SUPPLIER:
SOUTHWEST MONUMENT & SIGN
512-331-1522 (PHONE)
512-335-3397 (FAX)
OR APPROVED EQUAL BY LANDSCAPE ARCH.

1 MORTAR STACK TOE WALL/RETAINING WALL
SCALE: 1" = 1'-0"

PERMALOC STRUCTUREDGE
ALUMINUM PAVER RESTRAINT

SIZE: IN 8' (2.44M) LENGTHS

☐ 3/32 " X 1 5/8 " (2.4MM X 41MM) w/ 0.170" (4.32MM) TOP LIP	☐MF	☐BL
☐ 1/8 " X 1 5/8 " (3.2MM X 41MM) w/ 0.190" (4.83MM) TOP LIP	☐MF	☐BL
☐ 3/16 " X 1 5/8 " (4.8MM X 41MM) w/ 0.210" (5.33MM) TOP LIP	☐MF	☐BL
☐ 1/8 " X 2 1/4 " (3.2MM X 57MM) w/ 0.190" (4.83MM) TOP LIP	☐MF	☐BL
☑ 3/16 " X 2 1/4 " (4.8MM X 57MM) w/ 0.210" (5.33MM) TOP LIP	☑MF	☐BL

FINISH LEGEND:
(MF) MILL FINISH-NATURAL ALUMINUM
(BL) BLACK DURAFLEX-ELECTROSTATICALLY APPLIED BAKED ON PAINT MEETS AAMA 2603

NOTES:
1. INSTALL PER MANUFACTURER'S "INSTALLATION GUIDELINES"
2. CONNECTION BETWEEN SECTIONS TO UTILIZE MANUFACTURER'S SLIDING CONNECTOR SYSTEM.
3. CORNERS: NOTCH BASE ONLY AND FORM A CONTINUOUS CORNER.
4. LANDSCAPE ARCHITECT TO REVIEW & APPROVE FORMWORK AND EDGING PRIOR TO PLACEMENT OF PAVERS.

PAVER EDGE RESTRAINT SUPPLIER:
PERMALOC CORPORATION
P: (800) 356-9660
WWW.PERMALOC.COM
OR APPROVED EQUAL BY LANDSCAPE ARCHITECT

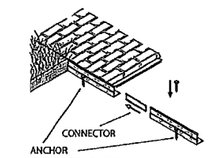

ISOMETRIC VIEW
NTS

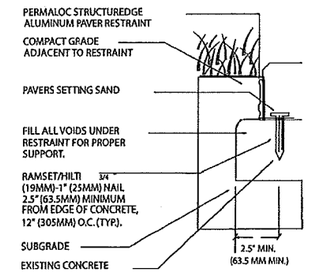

2 PAVER EDGE RESTRAINT OVER CONCRETE
NTS

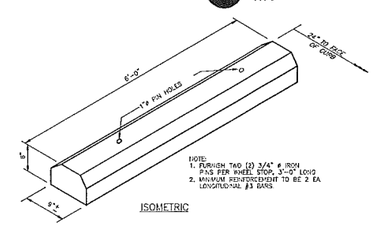

ISOMETRIC

5 WHEEL STOP
NTS

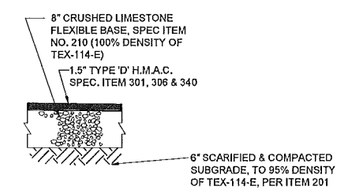

6 ASPHALT PARKING
NTS

KEY

1. ADJACENT CONCRETE WALKWAY REF. DET. 3 SHT. L-14
2. EXPANSION JOINT - 3/4" CEDAR FULL DEPTH TO SUPPORT BACKER ROD/ZIP-STRIP, SEAL WITH SL-1 JOINT SEALANT (COLOR TO MATCH CONCRETE / LIMESTONE); 1/2" DIA. SMOOTH DOWEL 18" LENGTH AT 24" O.C. MIN. TO ADJACENT WALKWAY, GREASE AND CAP FULL LENGTH OF EXPOSED DOWEL. REF. SITE PLAN FOR JOINT LOCATIONS.
3. FLAGSTONE - 2"X4"X8" LIMESTONE TO MATCH EXISTING PATTERN. MORTAR IN-PLACE, SAND JOINTS; SUBMIT 3 STONES FOR APPROVAL BY LANDSCAPE ARCHITECT.
4. FLAGSTONE BED - 4" CONCRETE, 3000 PSI, CONCRETE WITH #3 BARS AT 18" O.C.E.W. REINF. TO BE PLACED 3/4" MIN. - 1" MAX. BELOW FINISHED SURFACE ON PLASTIC CHAIRS.
5. SAND BED - 2" THICK MINIMUM LEVELING SAND OR DRY SCREENINGS.
6. COMPACTED SUBGRADE TO 95% MAX. DENSITY.

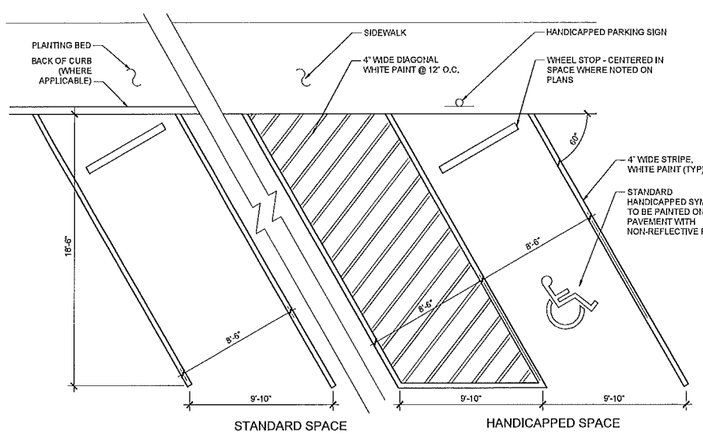

NOTES:
1. DRIVE AISLE IS MIN. 17' WIDE
2. RAMP ACCESS AND SURFACE SLOPES SHALL COMPLY WITH ADA/TAS REQUIREMENTS.
3. EACH HANDICAPPED PARKING SPACE SHALL BE SIGNED IN ACCORDANCE WITH ADA REQUIREMENTS.

3 TYP. PARKING SPACE LAYOUT
NTS

NOTES:
1. ACCESSIBLE PARKING SPACES SHALL BE IDENTIFIED AND RESERVED FOR THE THE DISABLED BY VERTICALLY MOUNTED SIGNS INCORPORATING THE SYMBOL OF ACCESSIBILITY AND PLACED SO THAT THEY WILL NOT BE OBSCURED BY PARKED VEHICLES. THERE SHALL BE A SUFFICIENT NUMBER OF SIGNS SO THAT EACH SPACE IS CLEARLY IDENTIFIED. THE SIGNAGE SHALL BE SUCH SIZE THAT IS LEGIBLE FROM A DISTANCE THAT WOULD BE REASONABLE FOR THE CONDITION. SIGNS MAY BE MOUNTED ON POSTS, WALL, FENCES, COLUMNS, OR OTHER PERMANENT VERTICAL SURFACES. THEY SHOULD BE MOUNTED BETWEEN 48 INCHES AND 80 INCHES ABOVE THE GROUND OR FLOOR SURFACE UNLESS THEY ARE PART OF AN ACCESSIBLE ROUTE.

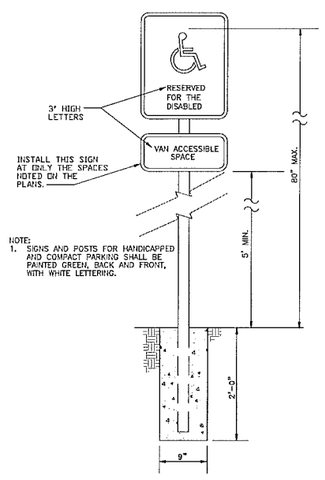

4 HANDICAP SIGN
NTS

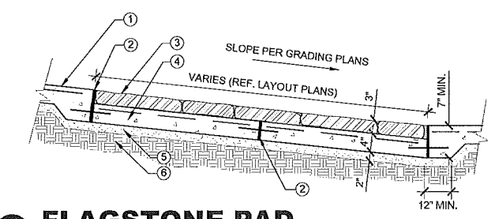

7 FLAGSTONE PAD
SCALE: 3/8" = 1'-0"

STATE OF TEXAS
DAVID URBAN
82783
LICENSED
PROFESSIONAL ENGINEER
6/5/2015

BAKER-AICKLEN & ASSOCIATES, INC.
527 WEST LIBERTY AVENUE
ROUND ROCK, TEXAS 78664
(512) 255-8883
ENGINEERING | SURVEYING | PLANNING | LANDSCAPE ARCHITECTS
ENGINEERING FIRM # F-945
SURVEY FIRM # 10023701
ROUND ROCK - CEDAR PARK
TBAE# 17577

DESIGNED: BH/GF | DRAWN: BH/GF | REVIEWED: BH

REGISTERED LANDSCAPE ARCHITECT
STEVEN M. ROSS
No. 2759
STATE OF TEXAS
04/16/15

NO.	DATE	REVISIONS	
NO.1	4.15.15	SECOND PERMIT REVIEW SUBMITTAL	CITY
NO.2	4.29.15	THIRD PERMIT REVIEW SUBMITTAL	CITY
			RECO/ID

CLIENT / OWNER: CITY OF LEANDER TEXAS

PROJECT: VETERAN'S PARK

SHEET TITLE: DETAILS

PROJECT No. 0674-2-017

SHEET No. L-20
23 OF 27

NOTES:
1. ALL REINFORCEMENT SHALL BE GRADE 60 STEEL #3 BAR @ 12" O.C. BOTH WAYS.
2. CONCRETE SHALL BE CLASS A 3000 PSI STRENGTH @ 28 DAYS.
3. ROCKS PLACED SIDE BY SIDE ON FINISHED GRADE. SIZES TO 6" LARGER THAN MAX. DIA. SHOWN ARE ACCEPTABLE.

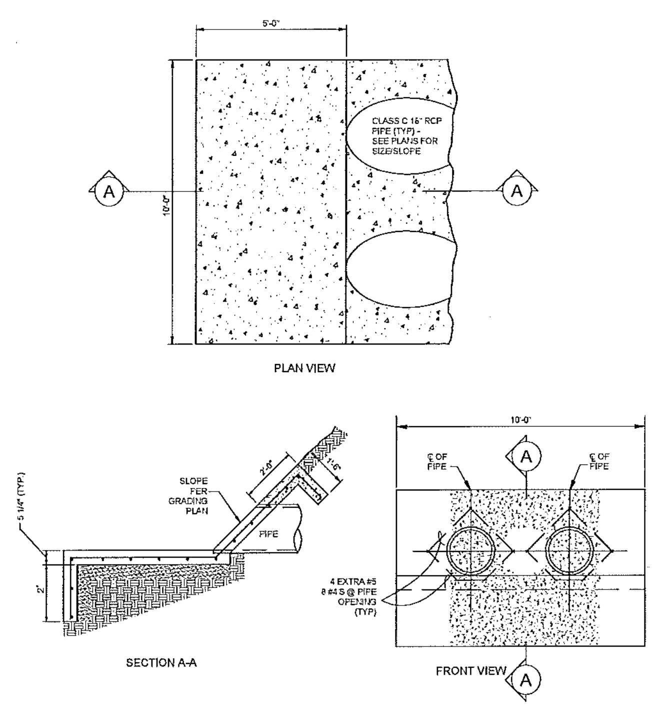

1 SLOPED HEADWALL
SCALE: 1" = 1'-0"

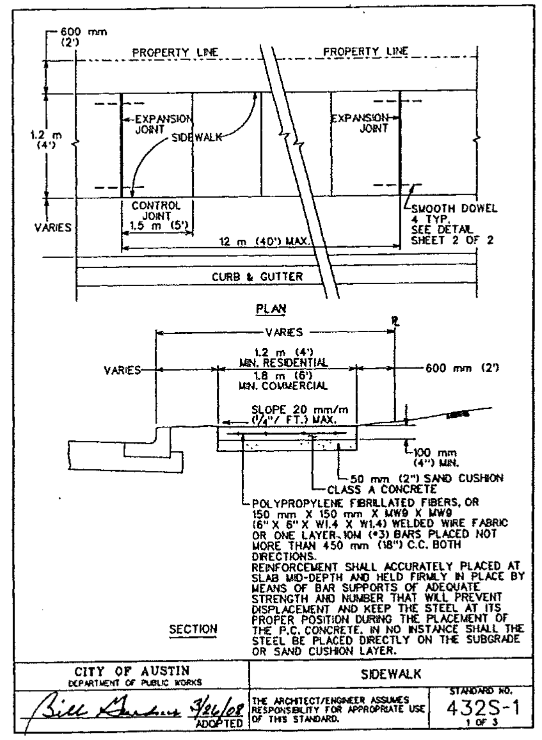

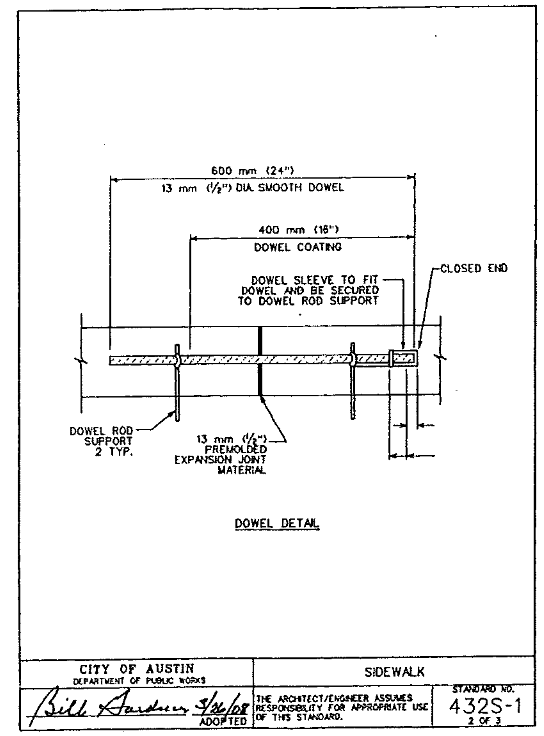

2 TYPICAL SIDEWALK
NTS

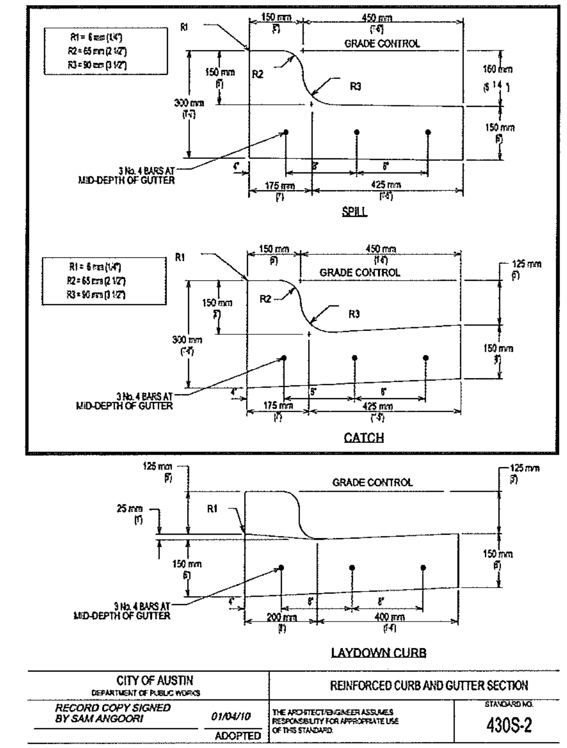

3 REINFORCED CURB & GUTTER
NTS

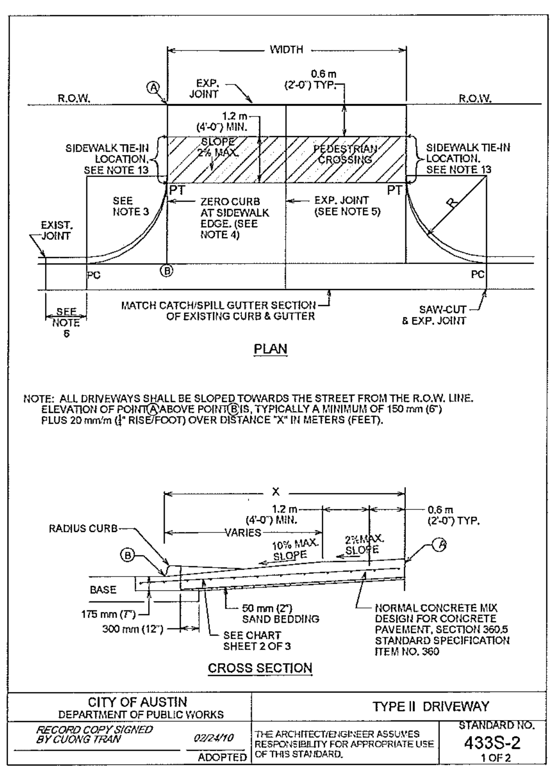

USE	THICKNESS	REINFORCEMENT
DRIVEWAYS FOR PASSENGER VEHICLE PARKING LOTS	150 mm (6") MIN.	125 mm (5") MIN. CONCRETE WITH ONE LAYER OF13M (#4) BARS PLACED ON CHAIRS AT MIDDEPTH OF SLAB AT NO MORE THAN 450 mm (18") O.C. BOTH DIRECTIONS
ALL OTHERS	175 mm (7") MIN.	125 mm (5") MIN. CONCRETE WITH ONE LAYER OF13M (#4) BARS PLACED ON CHAIRS AT MIDDEPTH OF SLAB AT NO MORE THAN 450 mm (18") O.C. BOTH DIRECTIONS

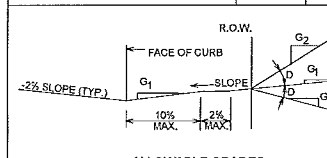

ALLOWABLE GRADES

DRIVEWAY VOLUME (ADT)	D=GRADE CHANGE STD.	MAX
>1500	0%	3%
500-1500	3%	6%
<500	6%	15%

NOTES:
1. ALL TYPE II DRIVEWAYS SHALL HAVE RADIUS ENDS.
2. DRIVEWAY WIDTHS AND RADII DIMENSIONS, ONE/TWO WAY TRAVEL REQUIREMENTS, AND GEOMETRIC LAY-OUT ARE HIGHLY VARIABLE, SUBJECT TO SITE SPECIFIC CONDITIONS AND REQUIREMENTS. SEE TRANSPORTATION CRITERIA MANUAL, SECTION 5 "DRIVEWAYS".
3. THE DRIVEWAY EDGE SHALL BE SMOOTHLY TRANSITIONED INTO THE SIDEWALK TIE-IN LOCATION BEGINNING AT THE RADIUS PC LINE.
4. "ZERO" CURB AT PT OR SIDEWALK EDGE, WHICHEVER IS ENCOUNTERED FIRST.
5. PLACE AN EXPANSION JOINT DOWN THE CENTER OF DRIVEWAY ALL DRIVEWAYS.
6. IF DIMENSION IS LESS THAN 1.5 METERS (5 FEET), REMOVE CURB AND GUTTER TO EXISTING JOINT AND POUR MONOLITHICALLY WITH DRIVEWAY.
7. IF THE BASE IS OVER-EXCAVATED WHERE THE CURB AND GUTTER WERE REMOVED, BACKFILL WITH CONCRETE MONOLITHICALLY WITH THE DRIVEWAY.
8. TYPE II DRIVEWAYS ARE TO BE LOCATED NO CLOSER TO THE CORNER OF INTERSECTING RIGHT OF WAY THAN 60% OF PARCEL FRONTAGE AT 30 METERS (100 FEET): WHICHEVER IS LESS.
9. DRIVEWAY SHALL NOT BE CONSTRUCTED WITHIN THE CURB RETURN OF A STREET INTERSECTION.
10. WHILE THE PROPERTY OWNER REMAINS RESPONSIBLE FOR GRADE BREAKS WITHIN PRIVATE PROPERTY, THE FIRE DEPARTMENT SHALL BE CONSULTED WHERE THE DRIVEWAY IS ESSENTIAL TO EMERGENCY VEHICLE ACCESS AND "G2 IS GREATER THAN 15%.
11. USE 12 MM (1/2") ASPHALT BOARD OR OTHER APPROVED MATERIAL FOR CURB AND GUTTER EXPANSION JOINTS. SIDEWALK, AT THE R.O.W. LINE AND AT MIDWIDTH, SEE NOTE 5.
12. SEE TRANSPORTATION CRITERIA MANUAL, SECTION 5 FOR OTHER DRIVEWAY REQUIREMENTS.
13. THE SIDEWALK, REGARDLESS OF ITS LOCATION WITH RESPECT TO THE CURB OR PROPERTY LINE, SHALL BE CONNECTED TO THE DRIVEWAY AT THESE LOCATIONS.
14. WATER METER BOXES AND WASTEWATER CLEAN OUTS ARE PROHIBITED FROM BEING LOCATED IN DRIVEWAY AREAS.

CITY OF AUSTIN DEPARTMENT OF PUBLIC WORKS	TYPE II DRIVEWAY	
RECORD COPY SIGNED BY CUONG TRAN 02/24/10 ADOPTED	THE ARCHITECT/ENGINEER ASSUMES RESPONSIBILITY FOR APPROPRIATE USE OF THIS STANDARD.	STANDARD NO. 433S-2 2 OF 2

3 TYPE II DRIVEWAY
NTS

BOLLARD SUPPLIER:
RELIANCE FOUNDRY CO. LTD.
CONTACT: LEN CRANMORE
1-888-735-5680 (PHONE)
OR APPROVED EQUAL
BY LANDSCAPE ARCH.

R-7539 FLUTED DUCTILE
REMOVABLE IRON BOLLARD

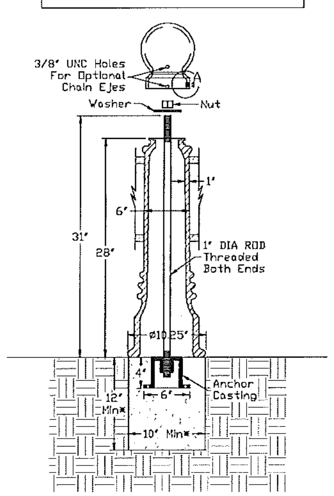

6 BOLLARD
SCALE: 1"=1'-0"

Cell Type	Section Width	Section Length Range Cells Long: 18, 21, 25, 29, 34	
	Variable	Minimum	Maximum
GW20V	7.7 ft - 9.2 ft (2.3 m - 2.8 m)	12.0 ft (3.7 m)	27.3 ft (8.3 m)
GW30V		15.4 ft (4.7 m)	35.1 ft (10.7 m)
GW40V		25.4 ft (7.7 m)	58.2 ft (17.8 m)

Available cell depths	3 in (75 mm), 4 in (100 mm), 6 in (150 mm), 8 in (200 mm)
Cell size and depth are determined by the details of the application, problem or desired solution. Refer to the GEOWEB® material specification for more information.	

(2) 18 CELL
(8) 29 CELL

GEOWEB SUPPLIER:
GEO SOLUTIONS
CONTACT: ROBERT
512-445-0796 (PHONE)
ROBERT@GEOSOLUTIONSINC.COM
OR APPROVED EQUAL
BY LANDSCAPE ARCH.

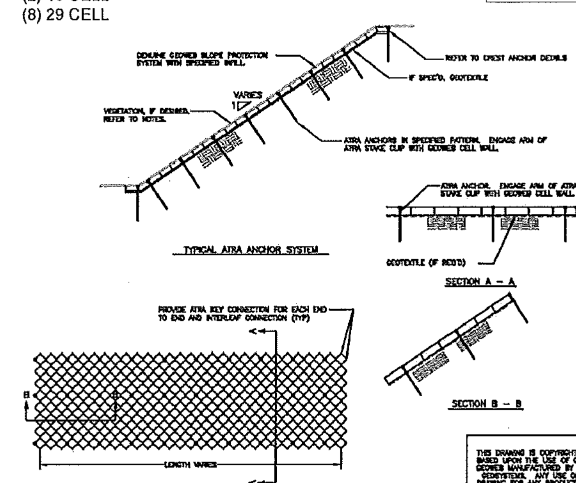

NOTES:
1. ATRA ANCHORS SHALL CONSIST OF NO. 4 REBAR WITH AN ATRA STAKE CLIP INSERTED INTO THE END OF THE REBAR. LENGTH OF THE ATRA ANCHORS SHALL BE AS SPECIFIED.
2. PRE-ASSEMBLED ATRA GFRP (POLYMER) ARE AVAILABLE FROM PRESTO GEOSYSTEMS.
3. THE GEOWEB SHALL BE FILLED WITH THE SPECIFIED MATERIAL (TOPSOIL, STONE, OR CONCRETE) AND SHALL BE SUITABLE TO WITHSTAND THE APPLICABLE HYDRAULIC CONDITIONS.
4. THE GEOWEB SECTIONS SHALL BE ANCHORED TO RESIST SLIDING DUE DRYING AND HYDRAULIC FORCES.
5. IF VEGETATION IS DESIRED, PROVIDE AN EROSION CONTROL BLANKET OR TURF REINFORCEMENT MAT IF THERE IS A POTENTIAL FOR EROSION PRIOR TO ESTABLISHING VEGETATION.
6. THE GEOWEB PANELS SHALL BE CONNECTED WITH ATRA KEYS AT EACH INTERLEAF AND END TO END CONNECTION.
7. REFER TO THE GENERAL DETAIL DRAWINGS FOR ANCHOR DETAILS.

STAKE ANCHOR INSTALLATION
STEPS:
1. POSITION THE ATRA ANCHOR NEXT TO THE UP-SLOPE CELL WALL.
2. DRIVE ATRA ANCHOR INTO THE GROUND UNTIL ARM OF ATRA STAKE CLIP IS LOCATED ABOVE GEOWEB CELL WALL.
3. ENGAGE ARM OF ATRA STAKE CLIP TO CELL WALL AND DRIVE UNTIL TIGHT.

ATRA ANCHOR DETAIL
VARIES
NO. 4 REBAR
ATRA STAKE CLIP CONNECTED TO REBAR

PRESTO® PRODUCTS CO.
GEOSYSTEMS

THIS DRAWING IS COPYRIGHTED AND BASED UPON THE USE OF GENUINE GEOWEB MANUFACTURED BY PRESTO GEOSYSTEMS. ANY USE OF THIS DRAWING FOR ANY PRODUCT OTHER THAN THAT MANUFACTURED BY PRESTO GEOSYSTEMS IS STRICTLY PROHIBITED.

GENUINE GEOWEB®
SLOPE WITH ATRA ANCHORS

7 GEOWEB
NTS

STATE OF TEXAS
DAVID URBAN
82783
LICENSED PROFESSIONAL ENGINEER
6/5/2015

BAKER-AICKLEN & ASSOCIATES, INC.
ENGINEERING | SURVEYING | GIS | PLANNING | LANDSCAPE ARCHITECTS
507 WEST LIBERTY AVENUE
ROUND ROCK TEXAS 78664
(512) 244-9620
ENGINEERING FIRM # F-45
SURVEY FIRM #10023100
TBAE# 1787
ROUND ROCK - CEDAR PARK

DESIGNED: BH/GF
DRAWN: BH/GF
REVIEWED: BH

REGISTERED LANDSCAPE ARCHITECT
BRANDON J. HAY
2758
STATE OF TEXAS
04/15/15

NO.	DATE	REVISIONS		CITY	RECOM'D
NO.1	4.15.15	SECOND PERMIT REVIEW SUBMITTAL		CITY	
NO.2	4.29.15	THIRD PERMIT REVIEW SUBMITTAL		CITY	

CLIENT | OWNER
CITY OF LEANDER TEXAS

PROJECT
VETERAN'S PARK

SHEET TITLE
DETAILS

PROJECT No.
0674-2-017

SHEET No. L-21
24 OF 27

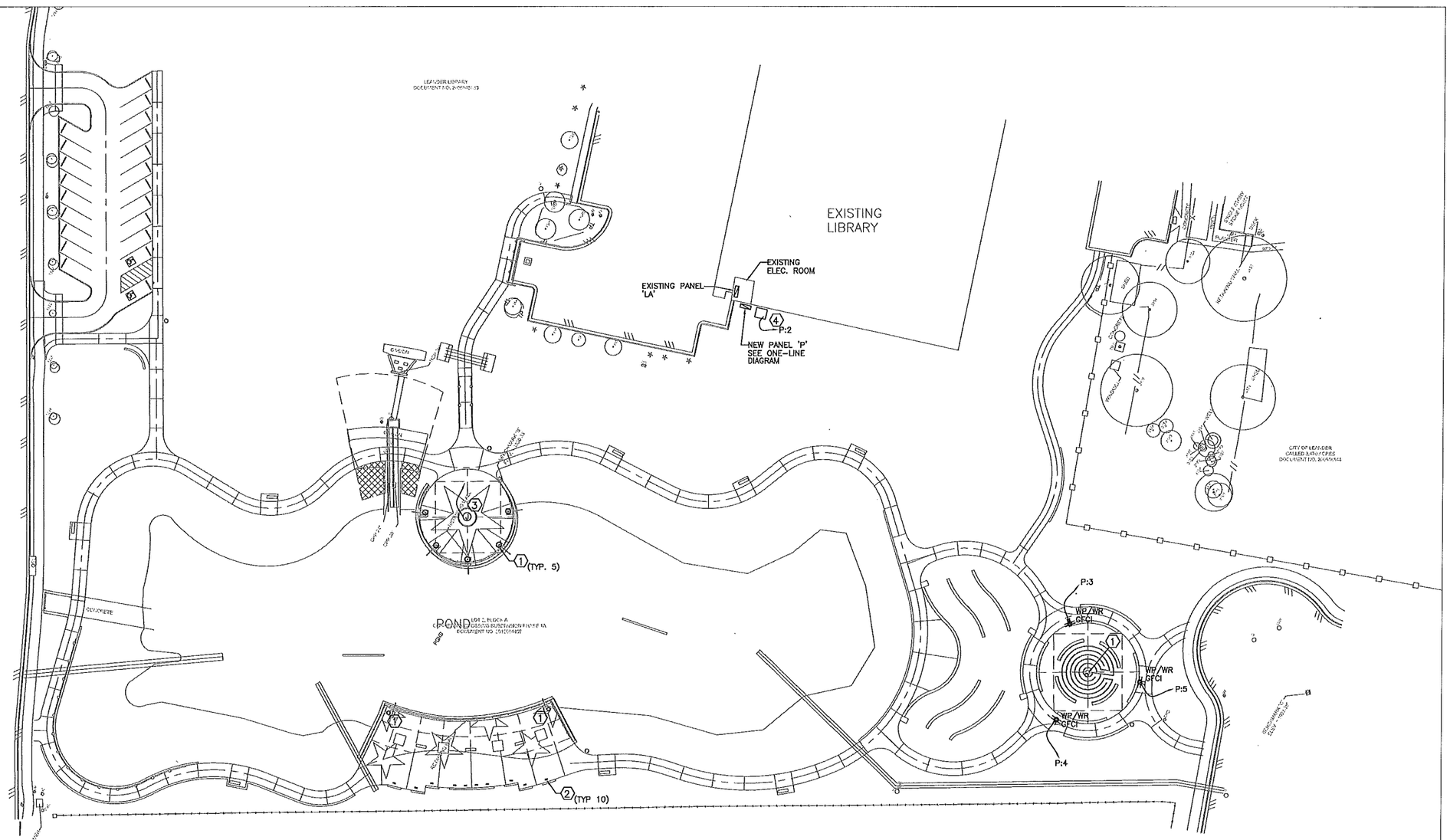

GENERAL NOTES:
1. CIRCUIT ALL LIGHTING TO CIRCUIT P:1 AND THROUGH PHOTOCELL/TIMECLOCK.

2. PROVIDE ROUGH-IN FOR ALL ITEMS IN PHASE 1 CONSTRUCTION. SEE INSTRUCTIONS FOR PHASING OF INSTALLATIONS.

3. VERIFY EXACT PLACEMENT OF LIGHTING FIXTURES WITH LAYOUT OF OBJECTS TO BE ILLUMINATED.

KEYED NOTES:
1. ERCO TERIS IN-GROUND DIRECTIONAL LUMINAIRE 33602.023, 18W LED, 120V, PROVIDE WITH MOUNTING ACCESSORIES AS REQUIRED.
2. ERCO SITE IN-GROUND WALL WASH LUMINAIRE 32809.023, 24W LED, 120V, PROVIDE WITH MOUNTING ACCESSORIES AS REQUIRED.
3. PROVIDE 1 1/4" CONDUIT WITH PULL WIRE FROM CENTRAL OF LOCATION TO PANEL 'P' FOR FUTURE SCULPTURE MOBILITY/LIGHTING REQUIREMENTS.
4. POND AERATOR SYSTEM BY OTHERS.

1 ELECTRICAL SITE PLAN

SCALE: 1" = 30'-0"

ISSUED FOR BIDDING AND CONSTRUCTION

STATE OF TEXAS
F. ALLEN PERRY
80130
REGISTERED PROFESSIONAL ENGINEER
24 APR 2015

ALPACA
ENERGY SOLUTIONS, INC.

M.E.P. ENGINEERING SERVICES
3532 Bee Caves Road Suite 111
Ph. (512) 328-8999
Austin, Texas 78746
F-3616

THE DESIGNS AND IDEAS CONTAINED IN THIS DOCUMENT ARE THE SOLE PROPERTY OF ALPACA ENERGY SOLUTIONS, INC. USE OF THIS DOCUMENT, IN WHOLE OR PART, FOR ANY PURPOSE OTHER THAN THE PROJECT FOR WHICH IT IS PREPARED IS PROHIBITED. NOR SHALL THIS DOCUMENT BE ALTERED IN ANY WAY OR ASSIGNED TO ANY PARTY OTHER THAN THE ORIGINAL INTENDED CLIENT.

BAKER-AICKLEN & ASSOCIATES, INC.
CHARTERED | SURVEYORS | CIS | PLANNERS | LANDSCAPE ARCHITECTS
ENGINEERING FIRM # F-45
SURVEY FIRM #11-0023-10
ROUND ROCK - CEDAR PARK
TBAE# 17837

DESIGNED: FAP
DRAWN: JMP
REVIEWED: FAP

NO.	DATE	REVISIONS	RECOM'D

CLIENT | OWNER: CITY OF LEANDER TEXAS

PROJECT: VETERAN'S PARK

SHEET TITLE: ELECTRICAL SITE PLAN

PROJECT No. 0674-2-017

SHEET No. E-1.0 OF

ELECTRICAL GENERAL NOTES

1. ALL WORK SHALL BE PERFORMED IN COMPLIANCE WITH THE LATEST EDITION OF ALL LOCAL AMENDMENTS AND REGULATIONS AS ADOPTED BY THE AUTHORITY HAVING JURISDICTION AND THE STATE OF TEXAS, AND THE PUBLICATIONS AND STANDARDS OF THE RELATED SUPPLEMANTARY CONDITIONS, WHICH ARE REFERENCED IN ELECTRICAL SPECIFICATIONS BY THE ABBREVIATIONS NOTED:

   UNITED STATES OF AMERICA STANDARDS INSTITUTE - USASI
   INSTITUTE OF ELECTRICAL AND ELCTRONIC ENGINEERS - IEEE .
   NATIONAL ELECTRICAL CODE - NEC
   NATIONAL FIRE PROTECTION ASSOCIATION - NFPA
   UNDERWRITER'S LABORATORIES - UL
   NATIONAL ELECTRICAL MANUFACTURER'S ASSOCIATION - NEMA
   CERTIFIED BALLAST MANUFACTURERS - CBM
   AMERICAN SOCIETY OF TESTING MATERIALS - ASTM
   OCCUPATIONAL SAFETY AND HEALTH ACT - OSHA

2. ALL WORK SHALL BE DONE IN ACCORDANCE WITH THE CONTRACT DOCUMENTS, PLANS AND THE SPECIFICATIONS, AND SHALL BE PERFORMED WITH THE LATEST INDUSTRY ACCEPTED STANDARDS.

3. CONTRACTOR SHALL BE RESPONSIBLE FOR ADEQUATELY BRACING AND PROTECTING ALL WORK DURING CONSTRUCTION AGAINST DAMAGE, BREAKAGE, COLLAPSE, AND MISALIGNMENT ACCORDING TO APPLICABLE CODES, STANDARDS AND GOOD CONSTRUCTION PRACTICES. CONTRACTOR SHALL TAKE PROPER PRECAUTIONS TO PROTECT ALL EXISTING OPERATIONS AND PROPERTY ADJACENT WITH WHICH WORK COMES IN CONTACT, OR OVER OR UNDER EQUIPMENT, DEBRIS, ETC. CONTRACTOR SHALL BE RESPONSIBLE OR REPAIR AND/OR REPLACEMENT IN KIND OF ALL INADVERTENT DAMAGE TO EXISTING SYSTEMS.

4. ALL NECESSARY PERMITS, LICENSES, CERTIFICATES, TESTS, ETC., SHALL BE PROCURED AND PAID FOR BY THE CONRACTOR.

5. THE DRAWINGS SALL NOT BE SCALED FOR CONSTRUCTION INSTALLATION DIMENSIONS. ALL CONDUIT ROUTING IS SHOWN IN APPROXIMATE LOCATIONS ONLY. THE CONTRACTOR SHALL BE RESPONSIBLE FOR FIELD VERIFICATION OF CONDITIONS, ND SHALL PERFORM FIELD MEASUREMENTS PRIOR TO FABRICATION AND/OR PURCHASE OF ANY EQUIPMETN AND MATERIAL. REFERENCE ALL DETAILS FOR ADDITIONAL CONSTRUCTION REQUIREMENTS. DETAILS MAY NOT BE REFERENCED ON THE DRAWING(S), BUT ARE INTENDED TO BE TYPICAL THROUGHOUT UNLESS OTHERWISE NOTED.

   DO NOT BEGIN WORK IF ANY DISCREPANCIES OR CONFLICTS ARE DISCOVERED BETWEEN SYSTEMS, UTILITIES, OT BETWEEN EXISTING ELEMENTS SCHEDULED TO REMAIN AND NEW RENOVATIONS , UNTIL THE DISCREPANCIES OR CONFLICTS ARE BROUGHT TO THE ATTENTION OF THE OWNER'S CONSTRUCTION REPRESENTATIVE AND/OR ENGINEER.SHOULD ANY CONFLICTS OR AMBIGUITIES EXIST IN THE DRAWINGS, NOTES OR SPECIFICATIONS, BRING THOSE TO THE ATTENTION OF THE ENGINEER IMMEDIATELY BEFORE PROCEEDING WITH WORK.

6. THE CONTRACTOR SHALL BE RESPONSIBLE FOR THE ENSURING FULL COORDINATION WITH ALL TRADES TO ACCOMPLISH THE WORK AS INDICATED AND NOTED IN CONTRACT DOCUMENTS, COORDINATE WITH OWNER'S REPRESENTATIVE, AND MAINTAIN A SET OF CONSTRUCTION DRAWINGS ON SITE AT ALL TIMES SO ANY AND ALL CHANGES BETWEEN THE DRAWINGS AND THE ACTUAL CONSTRUCTION CAN BE NOTED. CONFLICTS ARISING DUE TO LACK OF COORDINATION SHALL BE THE RESPONSIBILITY, AND AT HE EXPENSE, OF THE CONTRACTOR. FINAL AS-BUILT DRAWINGS ARE TO BE DELIVERED TO THE OWNER/ENGINEER AND THE FINAL INVOICE FOR THE CONTRACT WILL NOT BE PAID UNTIL THESE AS-BUILT DRAWINGS ARE RECEIVED.

7. WORK AREAS ARE TO BE KEPT FREE OF DEBRIS AT ALL TIMES AND ARE TO BE LEDT BROOM CLEAN AT THE END OF EACH WORKING DAY. THE CONTRACTOR SHALL DISPOSE OF OFF-SITE, ALL MATERIALS REMOVED WHICH ARE NOT TO BE REINSTALLED OR SLAVAGED ON THE PROJECT, UNLESS DIRECTED OTHERWISE BY OWNER. DISPOSAL OF MATERIALS SHALL BE IN ACCORDANCE WITH ACCEPTABLE METHODS APPROVED BY OWNER AND COORINATED THROUGH OWNER'S COORDINATOR.

8. THE CONTRACTOR SHALL BE RESPONSIBLE FOR PROVIDING ALL NECESSARY EQUIPMENT AND MANPOWER FOR HOISTING AND RIGGING ALL MATERIALS FURNISHED UNDER THE SCOPE OF WORK.

9. THE CONTRACTOR SHALL BE RESPONSIBLE FOR MAINTAINING THE RATING OF ALL PENETRATIONS THROUGH FIRE AND SMOKE RATED SURFACES. THE CONTRACTOR SHALL COMPLY WITH THE UL LISTING INSTRUCTIONS FOR PENETRATIONS THROUGH RATED SURFACES.

10. THE CONTRACTOR SHALL BE RESPONSIBLE FOR TRAINING OF HIS EMPLOYEES AND SUBCONTRACTORS IN THE RECOGNITION AND AVOIDANCE OF UNSAFE CONDITIONS, AND IN THE REGULATIONS AND HAZARDS WHICH APPLY TO THE AREA IN WHICH THE WORK WILL TAKE PLACE. ALL SAFETY EXPOSURES OT VOILATIONS BROUGHT TO THE ATTENTION OF THE CONTRACTOR SHALL BE RECTIFIED IMMEDIATELY.

11. THE CONTRACTOR SHALL BE RESPONSIBLE FOR PROVIDING PROTECTION OF PERSONS AND PROPERTY, AND FOR PROVIDING SAFE WORKING CONDITIONS THROUGH OUT THE WORK PROCESS. CONTRACTOR SHALL PROVIDE TEMPORARY COVERINGS FOR OPENING THROUGH WALLS OR FLOORS, AND PROVIDE TEMPORARY BARRIERS, PARTITIONS AND/OR DUST BARRIERS WHERE REQUIRED TO MAINTAIN OSHA AND THE OWNER'S SAFETY STANDARDS AND TO PREVENT DAMAGE TO PROPERTY. ALL AREAS ADJACENT TO THE CONSTRICATION AREA OR AFFECTED BY THE CONSTRUCTION MUST BE PROTECTED FROM DAMAGE. CLEANED AND RESTORED TO THEIR ORIGINAL DAMAGE, CLEANED AND RESTORED TO THEEIR ORIGINAL CONDITION AT THE END OF THE PROJECT. WELDING BLANKETS SHALL BE UTILIZED FOR PROTECTION OF COMBUSTIBLE MATERIALS IN AREAS WHERE WELDING OR CUTTING WITH A TORCH IS CONDUCTED.

12. ALL WORK SHALL BE GUARANTEED AGAINST DEFECTIVE MATERIALS AND WORKMANSHIP FOR A PERIOD OF NO LESS THAN ONE (1) YEAR AFTER THE DATE OF SUBSTANTIAL COMPLETION OR ACCEPTANCE OF THE WORK. THE CONTRACTOR SHALL REPAIR OR REPLACE, AT HIS OWN EXPENSE WHEN ORDERED TO DO SO, ALL WORK THAT MAY DEVELOP DEFECTS IN MATERIAL OR WORKMANSHIP WITHIN SAID PERIOD OF TIME. ALL EQUIPMENT, SHALL BE INSTALLED IN ACCORDANCE WITH MANUFACTURER'S RECOMMENDATIONS FOR SERVICE INTENDED. ALL MATERIALS, TOOLS, COSTS, AND SERVICES NESSARY TO COMPLETELY INSTALL ALL ELECTRICAL WORK SHALL BE PROVIDED BY THE CONTRACTOR.

13. ALL PROPOSED EQUIPMENT INSTALLED ON THE PROJECT SHALL BE NEW AND UNUSED UNLESS NOTED OTHERWISE. ALL EQUIPMENT SHALL BE LABELED AND LISTED FOR THE INTENDED USE. THE EQUIPMENT SHALL BE LABELED AND LISTED FOR THE INTENDED USE. THE ELECTRICAL CONTRACTOR SHALL REMOVE ALL LABELS, DIRT, PAINT SPOTS, GREASE AND STAINS FROM ALL ELECTRICAL EQUIPMENT AND SHALL CLEAN ALL EQUIPMENT AS NECESSARY. NO LOOSE PARTS OR SCRAPS OF EQUIPMENT SHALL BE LEFT ON THE PREMISES. EQUIPMENT LOCATION AND ROUTING IS APPROXIMATE AND SHALL BE REPLACE TO PROVIDE PROPER ACCESS AND CLEARANCE FROM OTHER TRADES AND EQUIPMENT.

14. ALL WIRING SHALL BE THWN/THHN, 98% CONDUCTIVITY, STRANDED COPPER, CONDUCTORS, 600V INSULATION. ALL WIRING SHALL BE INSTALLED ON CONDUIT AND CONDITIONED (WITHOUT SPLICES).

15. A GREEN GROUND CONDUCTOR SHALL BE PROVIDED WITH ALL BRANCH AND FEEDER CIRCUITS. SIZE PER N.E.C. 250 UNLESS NOTED OTHERWISE. ALSO PROVIDE A SEPARATE DEDICATED NEUTRAL WIRE FOR ALL CIRCUITS. UPON COMPLETION OF THE WORK, ALL PARTS OF THE ELECTRICAL INSTALLATION SHALL BE TESTED AND PROVED TO BE FREE OF UNWANTED GROUNDS AND OTHER DEFECTS. FINAL TESTS SHALL BE ACCOMPLISHED BY USE OF MEGGAR.

16. ALL CONDUIT SHALL BE EMT WITH STEEL COMPRESSION TYPE FITTINGS UNLESS NOTED OTHERWISE. MOUNT THE CONDUIT AS HIGH AS POSSIBLE AND RUN PARALLEL AND PERPENDICULAR TO STRUCTURES.

17. ELECTRICAL CONTRACTOR SHALL PROVIDE AND INSTALL TAGGED LABELED PULL WIRES IN ALL EMPTY RACEWAYS. USE NO. 14 AWG ZINC COATED STEEL OR BRAIDED LINE HAVING NOT LESS THAN 200-LB TENSILE STRENGTH.

18. DUCT BANK CONDUIT SHALL BE RIGID SCHEDULE 40 OR 80 GRAY PVC.

19. CHANNEL AND ANGLE SUPPORT SYSTEMS, HANGERS, ANCHORS, SLEEVES, AND FASTENERS SHALL BE DESIGNED TO PROVIDE SECURE SUPPORTS FROM THE BUILDING STRUCTURE FOR ELECTRICAL COMPONENTS. SUPPORTING DEVICES SHALL BE HOT DIPPED GALVANIZED STEEL. CONFORM TO MANUFACTURER'S RECOMMENDATIONS FOR SELECTING SUPPORTS THE STRENGTH OF SUPPORTS SHALL BE ADEQUATE TO CARRY ALL PRESENT AND FUTURE LOADS TIMES A SAFETY FACTOR OF AT LEAST FOUR; 200-LB MINIMUM DESIGN LOAD. SUPPORT PARALLEL RUNS OF HORIZONTAL RACEWAYS TOGETHER ON TRAPEZE OR BRACKET TYPE HANGERS.

20. PULL BOXES SHALL BE GALVANIZED SHEET METAL WITH SCREW ON COVER AND WELDED SEAMS, FULLY HINGED ON ONE SIDE, WITH ALL STAINLESS STEEL NUTS, BOLTS, WASHERS, HARDWARE, ETC. BOXES SHALL BE SIZED IN ACCORDANCE WITH THE NEC.

21. ALL PANEL BOARDS SHALL BE MOUNTED TO KINDORF CHANNEL FRAMING INDEPENDENT OF BUILDING STRUCTURE.

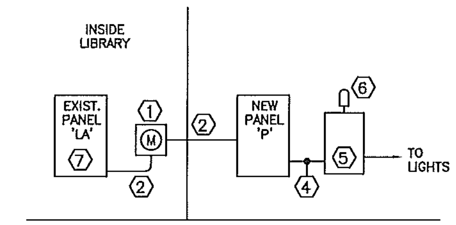

KEYED NOTES, ONE-LINE DIAGRAM:

(1) EMON E20-208100-JHIT, 100A, 208V-3ø SUB-METER WITH CT'S.

(2) 4#8, 1#10G, 3/4"C.

(3) 120/208V-3ø, 125 AMP MLO, 12CKT, NEMA 3R.

(4) 1 1/4" CONDUIT MIN. ALLOW FOR FUTURE CIRCUITS.

(5) TORK DZS400BP, 4 CHANNEL, 365 DAY TIMER, 20A/CKT, 120V.

(6) TORK EPC1 PHOTOCELL, DIRECTIONAL.

(7) INSTALL 40 AMP, 3 POLE BREAKER IN EXISTING PANEL TO FEED SUB-PANEL 'P'.

1 ELECTRICAL ONE-LINE DIAGRAM

SCALE: NONE

PANELBOARD P — FEED FROM: MAIN SERVICE
VOLTAGE: 120 / 208 — MOUNTING: SURFACE NEMA 3R — AIC RATING: 22KAIC Fully Rated — LOCATION:
BUS AMPS: 125 — MAIN: MLO

SERVING	CCT NO.	LOAD	LITE	RECPT	HEAT	HVAC	MISC	KITCH	WIRE SIZE	POLE	BRKR AMP/		BRKR AMP	POLE	WIRE SIZE	LITE	RECPT	HEAT	HVAC	MISC	KITCH	LOAD	CCT NO.	SERVING
LIGHTING	1	500	500						2#10, 1#10G, 3/4"C.	1	20	A	20	1	2#10, 1#10G, 3/4"C.					1800		1800	2	POND AREATOR
RECEPTACLES	3	1500		1500					2#10, 1#10G, 3/4"C.	1	20	B	20	1	2#10, 1#10G, 3/4"C.		1500					1500	4	RECEPTACLES
RECEPTACLES	5	1500		1500					2#10, 1#10G, 3/4"C.	1	20	C	20	1	2#10, 1#10G, 3/4"C.							0	6	SPARE
SPARE	7	0								1	20	A										0	8	SPACE
SPACE	9	0										B										0	10	"
"	11	0										C										0	12	"
			LITE	RECPT	HEAT	HVAC	MISC	KITCH								WATTS			AMPS					
TOTAL CONNECTED VA			500	4500	0	0	1800	0								6800			18.9					
TOTAL DEMAND VA			625	4500	0	0	1800	0								6925			19.2					
NEC MIN. REQUIRED AMPACITY			19																					

ISSUED FOR BIDDING AND CONSTRUCTION

STATE OF TEXAS — F. ALLEN PERRY — 80130 — REGISTERED PROFESSIONAL ENGINEER
24 APR 2015

ALPACA ENERGY SOLUTIONS, INC.
M.E.P. ENGINEERING SERVICES
3532 Bee Caves Road Suite 111
Ph. (512) 328-8999
Austin, Texas 78746
F-3616

THE DESIGNS AND IDEAS CONTAINED IN THIS DOCUMENT ARE THE SOLE PROPERTY OF ALPACA ENERGY SOLUTIONS, INC. USE OF THIS DOCUMENT, IN WHOLE OR PART, FOR ANY PURPOSE OTHER THAN THE PROJECT FOR WHICH IT IS PREPARED IS PROHIBITED. NOR SHALL THIS DOCUMENT BE ALTERED IN ANY WAY OR ASSIGNED TO ANY PARTY OTHER THAN THE ORIGINAL INTENDED CLIENT.

BAKER-AICKLEN & ASSOCIATES, INC.
507 WEST LIBERTY AVENUE
ROUND ROCK TEXAS 78664
(512) 244-9620
ENGINEERING FIRM # F45
SURVEY FIRM #100231-0
TBAE# 1787
ENGINEERS | SURVEYORS | GIS | PLANNERS | LANDSCAPE ARCHITECTS
ROUND ROCK - CEDAR PARK

DESIGNED: FAP — DRAWN: JMP — REVIEWED: FAP

NO.	DATE	REVISIONS	RECOM'D

CLIENT | OWNER: CITY OF LEANDER TEXAS

PROJECT: VETERAN'S PARK

SHEET TITLE: ELECTRICAL

PROJECT No. 0674-2-017

SHEET No. E-2.0 - OF -