City of Leander

Bagdad Road Sidewalk Improvements
Crystal Falls to Eagles Way

JULY 2015

STATE OF TEXAS
7-22-15
GRAYSON M. COX
111345
LICENSED
PROFESSIONAL ENGINEER

Prepared by:

KSA Engineers, Inc.
(TBPE Firm Registration No. F-1356)
4833 Spicewood Springs Road,
Suite 204
Austin, TX 78759
Telephone: (512) 342-6868
Fax: (512) 342-6877
Web Page: www.ksaeng.com

Table of Contents

Page

CONTRACT DOCUMENTS

Notice to Bidders NB-1
Instructions to Bidders IB-1
Statement of Qualifications of Bidders SQ-1
Bid Bond BB-1
Bid Proposal PR-1
Notice of Award NA-1
Agreement – City of Leander
Standard Form of Agreement SF-1
Performance Bond PB-1
Payment Bond PB-3
Separation of Materials Form SM-1
Certification of Insurance IC-1
Notice to Proceed NP-1

GENERAL CONDITIONS 1

SUPPLEMENTARY CONDITIONS SC-1

TECHNICAL SPECIFICATIONS

General 01000

01010 Summary of Work 01010-1
01019 Contract Considerations 01019-1
01027 Applications for Payment 01027-1
01039 Coordination and Meetings 01039-1
01040 Project Administration 01040-1
01041 Job Management 01041-1
01090 Reference Standards 01090-1
01200 Unit Bid Items 01200-1
01300 Submittals 01300-1
01400 Quality Control 01400-1
01410 Testing Services 01410-1
01500 Construction Facilities and temporary Controls 01500-1
01550 Barricades Signs and Traffic Handling 01550-1
01552 Stormwater Pollution Prevention 01552-1
01568 Erosion and Sediment Control During Construction 01568-1
01600 Material and Equipment 01600-1
01700 Contract Closeout 01700-1

Site Work 02000

02220 Trench and Excavation Safety System 02220-1
02240 Care of Water During Construction 02240-1

TxDOT Specifications

Tx100MOD Modifications to Item Tx100 ..... Tx100MOD-1
Tx100 Preparing of Right of Way Tx100-1

Tx104MOD Modifications to Item Tx104 ..... Tx104MOD-1
Tx104 Removing Concrete Tx104-1

Table of Contents

Page

Tx105MOD	Modifications to Item Tx105	Tx105MOD-1
Tx105	Removing Stabilized Base and Asphalt Pavement	Tx105-1
Tx110MOD	Modifications to Item Tx110	Tx110MOD-1
Tx110	Excavation	Tx110-1
Tx132MOD	Modifications to Item Tx132	Tx132MOD-1
Tx132	Embankment	Tx132-1
Tx162MOD	Modifications to Item Tx162	Tx162MOD-1
Tx162	Sodding for Erosion Control	Tx162-1
Tx420MOD	Modifications to Item Tx420	Tx420MOD-1
Tx420	Concrete Structures	Tx420-1
Tx464MOD	Modifications to Item Tx464	Tx464MOD-1
Tx464	Reinforced Concrete Pipe	Tx464-1
Tx465MOD	Modifications to Item Tx465	Tx465MOD-1
Tx465	Manholes and Inlets	Tx465-1
Tx467MOD	Modifications to Item Tx467	Tx467MOD-1
Tx467	Safety End Treatments	Tx467-1
Tx479MOD	Modifications to Item Tx479	Tx479MOD-1
Tx479	Adjusting Manholes and Inlets	Tx479-1
Tx500	Mobilization	Tx500-1
Tx502	Barricades, Signs, and Traffic Handling	Tx502-1
Tx506MOD	Modifications to Item Tx506	Tx506MOD-1
Tx506	Temporary Erosion, Sedimentation, and Environmental Controls	Tx506-1
Tx530MOD	Modifications to Item Tx530	Tx530MOD-1
Tx530	Intersections, Driveways, and Turnouts	Tx530-1
Tx531MOD	Modifications to Item Tx531	Tx531MOD-1
Tx531	Sidewalks	Tx531-1
Tx644MOD	Modifications to Item Tx644	Tx644MOD-1
Tx644	Small Roadside Sign Support and Assemblies	Tx644-1
Tx666MOD	Modifications to Item Tx666	Tx666MOD-1
Tx666	Reflectorized Pavement Markings	Tx666-1

Special Specifications

LEAN-01	Pedestrian Bridge	LEAN-01-1
LEAN-02	Limestone Faced Concrete Wall	LEAN-02-1

Table of Contents

Page

TECHNICAL SPECIFICATION REFERENCES

The technical specifications included herein were prepared from the following sources:

- General specifications (01000) prepared by the Engineer
- Site Work specifications (02000) prepared by the Engineer
- Special specifications (LEAN-00) prepared by the Engineer
- Texas Department of Transportation specifications (Tx###) from TxDOT *Standard Specifications for Construction and Maintenance of Highway, Streets, and Bridges*, 2004 Edition.

The technical specifications may have a modification sheet preceding the specification that modifies, amplifies, or amends the technical specification and plans. The modification sheet takes precedence over the plans and technical specifications. It is the contractor's responsibility to read and understand the requirements of the project specifications and modifications.

The specifications from *Standard Specifications for Construction and Maintenance of Highways, Streets, and Bridges* includes reference specifications that supplement the actual specification, and Departmental Material Specification's (DMS) that are NOT included herein. Furthermore, it is the responsibility of the Contractor to procure, read and understand the applicable reference specifications and DMS's. The reference specifications and DMS's are applicable to this project and are required by these documents, as referred to in the technical specification, even though they are not included herein.

NOTICE TO BIDDERS

The City of Leander, Texas is soliciting bids from qualified contactors for the following work:

Bagdad Road Sidewalk Improvements
Crystal Falls to Eagles Way

Bid Opening: Thursday, August 6, 2015, 2:00 pm

Bids must be returned to the City of Leander: Attention: Joy Simonton, Purchasing Agent, P.O. Box 319, Leander, TX 78646-0319 or 200 W. Willis Street, Leander by the stated deadline, at which time they will be opened and read. All bids must be sealed and plainly marked with the project name. ***No faxes will be accepted.***

Bids should include costs for labor, supplies and supervision necessary for construction in accordance with plans and specifications. The scope of work includes approximately 4,400 linear feet of sidewalks, limestone block retaining walls, drainage facilities, and associated improvements.

SPECIFICATIONS may be examined without charge at the City of Leander. Contract documents including bid proposal forms, plans sheets, and specifications may be viewed and downloaded free of charge (with the option to purchase hard copies) at www.civcastusa.com on or after **July 23, 2015**. Scanned plans and specifications are available on CD for a non-refundable price of $25.00 from KSA Engineers, Inc., 4833 Spicewood Springs Road, Suite 204, Austin, Texas 78759, 512-342-6868. Printed copies may also be viewed at the KSA office.

Please submit questions for this project no later than 72 hours prior to bid opening through www.civcastusa.com in the Q&A portal.

A CERTIFIED CHECK or an acceptable Bid Bond for not less than five percent (5%) of the total bid shall accompany each bid.

A NON-MANDATORY PRE-BID CONFERENCE will be held on Thursday, July 30, 2015 at 2:00 pm at 406 Municipal Drive, Leander, TX.

BIDDERS should inspect the site and be knowledgeable of all conditions. Time of completion shall be **120** calendar days including weekends and holidays.

THE SUCCESSFUL BIDDER will be required to furnish Performance and Payment Bonds in the amount of the contract.

NO BID may be withdrawn after the scheduled opening for at least ninety (90) calendar days.

THE CITY reserves the right to reject any or all bids, waive formalities and award the bid to the lowest responsive bidder.

INSTRUCTIONS TO BIDDERS

INDEX

	Page No.
Defined Terms	IB-1
Items To Be Submitted with Bid	IB-1
Items To Be Submitted By Successful Bidder	IB-1
Copies of Bidding Documents	IB-2
Qualifications of Bidders	IB-2
Examination of Contract Documents and Site	IB-2
Availability of Lands for Work	IB-4
Interpretations and Addenda	IB-4
Bid Security	IB-4
Contract Time	IB-4
Liquidated Damages	IB-4
Substitute or "Or Equal" Items	IB-4
Subcontractors, Suppliers and Others	IB-5
Bid Form	IB-5
Submission of Bids	IB-6
Modification and Withdrawal of Bids	IB-6
Opening of Bids	IB-6
Bids to Remain Subject to Acceptance	IB-6
Award of Contract	IB-6
Contract Security	IB-7
Signing of Agreement	IB-8
Prebid Conference	IB-8
Sales and Use Taxes	IB-8
Retainage	IB-8
Contracts to be Assigned	IB-8
Wage Rates	IB-8

INSTRUCTIONS TO BIDDERS

1. Defined Terms:

Terms used in these Instructions to Bidders which are defined in the Standard General Conditions of the Construction Contract (No. 1910-8, 1996 Edition) have the meanings assigned to them in the General Conditions.

Certain additional terms used in these Instructions to Bidders have the meanings indicated below which are applicable to both the singular and plural thereof.

1.1 Bidder - one who submits a Bid directly to Owner as distinct from a sub-bidder, who submits a bid to a Bidder.

1.2 Issuing Office - the office from which the Bidding Documents are to be issued and where the bidding procedures are to be administered.

1.3 Successful Bidder - the lowest, responsible and responsive Bidder to whom Owner (on the basis of Owner's evaluation as hereinafter provided) makes an award.

2. Items To Be Submitted With Bid:

The following forms in the Contract Documents shall be fully completed by the Bidder and submitted at Bid Time:

1) Certified and Cashier's check or Bid Bond

2) Bid Form

3. Items To Be Submitted By Successful Bidder:

Items which will be required of the successful bidder prior to contract approval shall include, but not be limited to, the following:

1) Performance, Payment and Maintenance Bonds (each in the amount of the contract)

2) Certificate of Insurance

3) Separation of Materials Form

4) Breakdown of Bid (for payment purposes)

4. Copies of Bidding Documents:

4.1. Complete sets of Bidding Documents in the number and for the deposit sum, if any, stated in the Advertisement or Invitation to Bid may be obtained from Issuing Office. A portion of the deposit will be refunded to each document holder of record who returns a complete set of Bidding Documents in good condition within five days after opening Bids, as stated in the Advertisement or Invitation to Bid.

4.2. Complete sets of Bidding Documents must be used in preparing Bids; neither Owner nor Engineer assumes any responsibility for errors or misinterpretations resulting from the use of incomplete sets of Bidding Documents.

4.3. Owner and Engineer in making copies of Bidding Documents available on the above terms do so only for the purpose of obtaining Bids on the Work and do not confer a license or grant for any other use.

5. Qualifications of Bidders

To demonstrate qualifications to perform the Work, each Bidder must be prepared to submit at the time of the Bid Opening written evidence, such as financial data, previous experience, present commitments and other such data as may be called for below (or in the Supplementary Instructions). Each bid must contain evidence of Bidder's qualification to do business in the state where the Project is located or covenant to obtain such qualification prior to award of the contract.

6. Examination of Contract Documents and Site:

6.1. It is the responsibility of each Bidder before submitting a Bid:

6.1.1 To examine the Contract Documents and other related data identified in the Bidding Documents (including "technical data" referred to below);

6.1.2 To visit the site to become familiar with local conditions that may affect cost, progress, performance or furnishing of the Work,

6.1.3 To consider federal, state and local Laws and Regulations that may affect cost, progress, performance or furnishing of the Work,

6.1.4 To study and carefully correlate Bidder's observations with the Contract Documents and such other related data; and

6.1.5 To promptly notify Engineer of all conflicts, error ambiguities or discrepancies in the Contract Documents and such other related documents.

6.2. Reference is made to the Supplementary Conditions for identification of:

6.2.1. Those reports of explorations and tests of subsurface conditions at or contiguous to the site which have been utilized by Engineer in preparation of the Contract Documents. Bidder may rely upon the accuracy of the "technical data" contained in such reports but not upon other data, interpretations, opinions or information contained in such reports or otherwise relating to the subsurface conditions at the site, nor upon the completeness thereof for the purposes of bidding or construction.

6.2.2. Those drawings of physical conditions in or relating to existing surface and subsurface structures (except Underground Facilities) which are at or contiguous to the site which have been utilized by Engineer in preparation of the Contract Documents. Bidder may rely upon the general accuracy of the "technical data" contained in such drawings but not upon other data, interpretations, opinions or information shown or indicated in such drawings or otherwise relating to such structures, nor upon the completeness thereof for the purposes of bidding or construction.

Copies of such reports and drawings will be made available by Owner to any Bidder on request. Those reports and drawings are not part of the Contract Documents, but the "technical data" contained therein upon which Bidder is entitled to rely as provided in Paragraphs 4.2 of the General Conditions has been identified and established in Paragraph SC-4.2 of the Supplementary Conditions. Bidder is responsible for any interpretation or conclusion drawn from any "technical data" or any such data, interpretations, opinions or information.

6.3. Information and data shown or indicated in the Contract Documents with respect to Underground Facilities at or contiguous to the site is based upon information and data furnished to Owner and Engineer by owners of such Underground Facilities or others, and Owner and Engineer do not assume responsibility for the accuracy or completeness thereof unless it is expressly provided otherwise in the Supplementary Conditions.

6.4. Provisions concerning responsibilities for the adequacy of data furnished to prospective Bidders with respect to subsurface conditions, other physical conditions and Underground Facilities, and possible changes in the Contract Documents due to differing conditions appear in Paragraphs 4.2., 4.3, and 4.4. of the General Conditions.

6.5. Before submitting a Bid, each Bidder will be responsible to obtain such additional or supplementary examinations, investigations, explorations, tests, studies and data concerning conditions (surface, subsurface and Underground Facilities) at or contiguous to the site or otherwise, which may affect cost, progress, performance or furnishing of the Work or which relate to any aspect of the means, methods, techniques, sequences or procedures of construction to be employed by Bidder and safety precautions and programs incident thereto or which Bidder deems necessary to determine its Bid for performing and furnishing the Work in accordance with the time, price and other terms and conditions of the Contract Documents.

6.6. On request in advance, Owner will provide each Bidder access to the site to conduct such examinations, investigations, explorations and tests and studies as each Bidder deems necessary for submission of a Bid. Bidder must fill all holes, clean up and restore the site to its former conditions upon completion of such explorations, investigations, tests and studies.

6.7. Reference is made to the Supplementary Conditions for the identification of the general nature of work that is to be performed at the site by Owner or others (such as utilities and other prime contractors) that relates to the work for which a Bid is to be submitted. On request, Owner will provide to each Bidder for examination access to or copies of Contract Documents (other than portions thereof related to price) for such work.

6.8. The submission of a Bid will constitute an incontrovertible representation by Bidder that Bidder has complied with every requirement of this Article 4, that without exception the Bid is premised upon performing and furnishing the Work required by the Contract Documents and applying the specific means, methods, techniques, sequences or procedures of construction (if any) that may be shown or indicated or expressly required by the Contract Documents, that Bidder has given Engineer written notice of all conflicts, errors, ambiguities and discrepancies that Bidder has discovered in the Contract Documents and the written resolutions thereof by Engineer is acceptable to Bidder, and that the Contract Documents are generally sufficient to

indicate and convey understanding of all terms and conditions for performing and furnishing of the Work.

6.9 The provisions of 4.1 through 4.4, inclusive, do not apply to Asbestos, Polychlorinated biphenyls (PCBs), Petroleum, Hazardous Waste or Radioactive Material covered by Paragraph 4.5 of the General Conditions.

7. Availability of Lands for Work, etc.

The lands upon which the Work is to be performed, rights-of-way and easements for access thereto and other lands designated for use by Contractor in performing the Work are identified in the Contract Documents. All additional lands and access thereto required for temporary construction facilities, construction equipment or storage of materials and equipment to be incorporated in the Work are to be obtained and paid for by Contractor. Easements for permanent structures or permanent changes in existing facilities are to be obtained and paid for by Owner unless otherwise provided in the Contract Documents.

8. Interpretations and Addenda:

8.1. All questions about the meaning or intent of the Contract Documents are to be directed to Engineer. Interpretations or clarifications considered necessary by Engineer in response to such questions will be issued by Addenda mailed or delivered to all parties recorded by Engineer as having received the Bidding Documents. Questions received less than ten days prior to the date for opening of Bids may not be answered. Only questions answered by formal written Addenda will be binding. Oral and other interpretations or clarifications will be without legal effect.

8.2. Addenda may also be issued to modify the Bidding Documents as deemed advisable by Owner or Engineer.

9. Bid Security:

9.1. Each Bid must be accompanied by Bid security made payable to Owner in an amount of five percent of the Bidder's maximum Bid price and in the form of a certified or bank check of Texas, payable to "**City of Leander**" or a Bid Bond (on form attached, if a form is prescribed) issued by a surety meeting the requirements of Paragraph 5.1. of the General Conditions.

9.2. The Bid security of the Successful Bidder will be retained until such Bidder has executed the Agreement, furnished the required contract security and met the other conditions of the Notice of Award, whereupon the Bid security will be returned. If the Successful Bidder fails to execute and deliver the Agreement and furnish the required contract security within fifteen days after the Notice of Award, Owner may annul the Notice of Award and the Bid security of that Bidder will be forfeited. The Bid security of other Bidders whom Owner believes to have a reasonable chance of receiving the award may be retained by Owner until the earlier of the seventh day after the Effective Date of the Agreement or the ninety-first day after the Bid opening, whereupon Bid security furnished by such Bidders will be returned. Bid security with Bids which are not competitive will be returned within seven days after the Bid opening.

10. Contract Time:

The number of days within which, or the dates by which, the Work is to be substantially completed and also completed and ready for final payment (the term "Contract Times" is defined in paragraph 1.12 of the General Conditions) are set forth in the Agreement (or incorporated therein by reference to the attached Bid Form).

11. Liquidated Damages:

Provisions for liquidated damages, if any, are set forth in Special Provision 000-1002.

12. Substitute or "Or-Equal" Items:

The Contract, if awarded, will be on the basis of materials and equipment described in the Drawings, specified in the Specifications or allowed in a written Addendum without consideration of possible substitute or "or-equal" items. Whenever it is indicated in the Drawings or specified in the Specifications that a substitute or "or-equal" item of material or equipment may be furnished or used by Contractor if acceptable to Engineer, application for such acceptance will not be considered by Engineer until after the Effective Date of the Agreement. The procedure for submission of any such application by Contractor and consideration by Engineer is set forth in Paragraph 6.7 of the General Conditions and may be supplemented in the General Requirements. (See Section M1, Paragraph 17).

13. Subcontractors, Suppliers, and Others:

13.1. If the Supplementary Conditions require the identity of certain Subcontractors, Suppliers and other persons and organizations (including those who are to furnish the principal items of material and equipment) to be submitted to Owner in advance of the specified date prior to the Effective Date of the Agreement, the apparent Successful Bidder, and any other Bidder so requested, shall within five days after the Bid opening submit to Owner a list of all such Subcontractors, Suppliers and other persons or organizations proposed for those portions of the Work for which such identification is required. Such list shall be accompanied by an experience statement with pertinent information regarding similar projects and other evidence of qualification for each such Subcontractor, Supplier, person or organization if requested by Owner. An Owner or Engineer who after due investigation has reasonable objection to any proposed Subcontractor, Supplier or other person or organization, either may before the Notice of Award is given request the apparent Successful Bidder to submit an acceptable substitute in which case the apparent Successful Bidder shall submit an acceptable substitute, that Bidder's Bid price will be increased (or decreased) by the difference in cost occasioned by such substitution and Owner may consider such price adjustment in evaluating Bids and making the contract award.

If apparent Successful Bidder declines to make any such substitution, Owner may award the contract to the next lowest Bidder that proposes to use acceptable Subcontractors, Suppliers and other persons and organizations. The declining to make requested substitutions will not constitute grounds for sacrificing the Bid security of any Bidder. Any Subcontractor, Supplier, other person or organization listed and to whom Owner or Engineer does not make written objection prior to the giving of the Notice to Award will be deemed acceptable to Owner and Engineer subject to revocation of such acceptance after the Effective Date of the Agreement as provided in Paragraph 6.8 of the General Conditions.

13.2. No Contractor shall be required to employ any Subcontractor, Supplier, other person or organization against whom Contractor has reasonable objection.

14. Bid Form:

14.1. The Bid Form is included with the Bidding Documents; additional copies may be obtained from Engineer (or the Issuing Office).

14.2. All blanks on the Bid Form must be completed in ink or by typewriter.

14.3. Bids by corporations must be executed in the corporate name by the president or a vice-president (or other corporate officer accompanied by evidence of authority to sign) and the

corporate seal must be affixed and attested by the secretary or an assistant secretary. The corporate address and state of incorporation must be shown below the signature.

14.4. Bids by partnerships must be executed in the partnership name and signed by a partner, whose title must appear under the signature and the official address of the partnership must be shown below the signature.

14.5. All names must be typed or printed below the signature.

14.6. The Bid shall contain an acknowledgment of receipt of all Addenda (the numbers of which must be filled in on the Bid Form).

14.7. The address and telephone number for communications regarding the Bid must be shown.

14.8 Evidence of authority to conduct business as an out-of-state corporation in the state where the Work is to be performed shall be provided in accordance with Paragraph 3 above. State contractor license number, if any, must also be shown.

15. Submission of Bids:

Bids shall be submitted at the time and place indicated in the Advertisement or Invitation to Bid and shall be enclosed in an opaque sealed envelope, marked with the Project title (and, if applicable, the designated portion of the Project for which the Bid is submitted) and name and address of the Bidder and accompanied by the Bid security and other required documents. If the Bid is sent through the mail or other delivery system the sealed envelope shall be enclosed in a separate envelope with the notation "BID ENCLOSED" on the face of it.

16. Modification and Withdrawal of Bids:

16.1. Bids may be modified or withdrawn by an appropriate document duly executed (in the manner that a Bid must be executed) and delivered to the place where Bids are to be submitted at any time prior to the opening of Bids.

16.2. If, within twenty-four hours after Bids are opened, any Bidder files a duly signed, written notice with Owner and promptly thereafter demonstrates to the reasonable satisfaction of Owner that there was a material and substantial mistake in the preparation of its Bid, that Bidder may withdraw its Bid and the Bid security will be returned. Thereafter, that Bidder will be disqualified from further bidding on the Work to be provided under the Contract Documents.

17. Opening of Bids:

Bids will be opened and (unless obviously non-responsive) read aloud publicly at the place where Bids are to be submitted. Non-responsive bids include failure to provide Bid Bond, lack of acknowledgment of addenda, and/or incomplete or blank unit prices for Bid Items in the Proposal. An abstract of the amounts of the base Bids and major alternates (if any) will be made available to Bidders after the opening of Bids.

18. Bids to Remain Subject to Acceptance:

All Bids will remain subject to acceptance for ninety days after the day of the Bid opening, but Owner may, in its sole discretion, release any Bid and return the Bid security prior to that date.

19. Award of Contract:

19.1. Owner reserves the right to reject any and all Bids, including without limitation the rights to reject any or all nonconforming, nonresponsive, unbalanced or conditional Bids and to reject

the Bid of any Bidder, whether because the Bid is not responsive or the Bidder is unqualified or doubtful financial ability or fails to meet any other pertinent standard or criteria established by Owner. Discrepancies between the multiplication of units of Work and unit prices will be resolved in favor of the unit prices. Discrepancies between the indicated sum of any column of figures and the correct sum thereof will be resolved in favor of the correct sum. Discrepancies between words and figures will be resolved in favor of the words.

19.2. In evaluating Bids, Owner will consider the qualifications of the Bidders, whether or not the Bids comply with the prescribed requirements, and such alternates, unit prices and other data, as may be requested in the Bid Form or prior to the Notice of Award.

19.3. Owner may consider the qualifications and experience of Subcontractor, Suppliers, and other persons and organizations proposed for those portions of the Work as to which the identity of Subcontractors, Suppliers, and other persons and organizations must be submitted as provided in the Supplementary Conditions. Owner also may consider the operating costs, maintenance requirements, performance data and guarantees of major items of materials and equipment proposed for incorporation in the Work when such data is required to be submitted prior to Notice of Award.

19.4. Owner may conduct such investigations as Owner deems necessary to assist in the evaluation of any Bid and to establish the responsibility, qualifications and financial ability of Bidders, proposed Subcontractors, Suppliers and other persons and organizations to perform and furnish the Work in accordance with the Contract Documents to Owner's satisfaction within the prescribed time.

19.5. If the contract is to be awarded, it will be awarded to the lowest responsive and responsible Bidder. The lowest bid will be determined from the total of all Base Bid schedules. All bid items and alternates must be bid for the bid to be considered responsive. The owner reserves the right to award a contract to the identified low bidder consisting of the Base Bid or alternates listed on the bid form. A detail breakdown for all deductive alternates shall be provided to the Owner and Engineer by the identified low bidder prior to award of a contract for consideration. The breakdown shall be similar to that required for Change Orders as detailed in the General Conditions. Reference is hereby made to Article 11 of the General Conditions for the nature of the required cost breakdown including, but necessarily limited to, detailed information for labor, equipment, and subcontractor costs.

19.6. If the contract is to be awarded, Owner will give the Successful Bidder a Notice of Award within ninety days after the day of the Bid opening.

20. Contract Security:

Paragraph 5.1 of the General Conditions and the Supplementary Conditions set forth Owner's requirements as to performance and payment Bonds. When the Successful Bidder delivers the executed Agreement to Owner, it must be accompanied by the required performance and payment Bonds.

21. Signing of Agreement:

When Owner gives a Notice of Award to the Successful Bidder, it will be accompanied by the required number of unsigned counterparts of the Agreement with all other written Contract Documents attached. Within fifteen days thereafter Contractor shall sign and deliver the required number of counterparts of the Agreement and attached documents to Owner with the required Bonds. Within ten days thereafter Owner shall deliver one fully signed counterpart to Contractor. Each counterpart is to be accompanied by a complete set of the Drawings with appropriate identification.

22. Prebid Conference:

~~A prebid conference will be held at the time and location indicated on the Notice to Bidders. Representatives of Owner and Engineer will be present to discuss the Project. Bidders are encouraged to attend and participate in the conference. Engineer will transmit to all prospective Bidders of record such Addenda as Engineer considers necessary in response to questions arising at the conference. Oral statements may not be relied upon and will not be binding or legally effective.~~

23. Sales and Use Taxes:

Owner is exempt from Texas State Sales and Use Taxes on materials and equipment to be incorporated in the Work. Said taxes shall not be included in the Contract Price. Refer to Supplementary Conditions SC-6.10 for additional Information.

24. Retainage:

Provisions concerning retainage are set forth in the Agreement.

25. Contracts to be Assigned:

None

26. Wage Rates:

Local prevailing wage rates shall be used for this project.

STATEMENT OF QUALIFICATIONS

_____
Bidder

_____
Address

Similar Projects Completed by Bidder:

1. **NAME OF PROJECT:** _____

OWNER: _____ **ADDRESS:** _____

DATE STARTED: _____ **DATE COMPLETED:** _____

APPROX. QUANTITIES OF MAJOR ITEMS: _____

_____

VALUE OF CONTRACT: _____

2. **NAME OF PROJECT:** _____

OWNER: _____ **ADDRESS:** _____

DATE STARTED: _____ **DATE COMPLETED:** _____

APPROX. QUANTITIES OF MAJOR ITEMS: _____

_____

VALUE OF CONTRACT: _____

3. **NAME OF PROJECT:** _____

OWNER: _____ **ADDRESS:** _____

DATE STARTED: _____ **DATE COMPLETED:** _____

APPROX. QUANTITIES OF MAJOR ITEMS: _____

_____

VALUE OF CONTRACT: _____

4. **OTHER PROJECT REFERENCES:** _____

_____

_____

BID BOND

BIDDER (Name and Address):

_____
_____
_____

SURETY (Name and Address of Principal Place of Business):

_____
_____
_____

OWNER (Name and Address):

City of Leander
200 W. Willis Street
Leander, TX 78641

BID

BID DUE DATE: _____
PROJECT (Brief Description Including Location):
City of Leander
Bagdad Road Sidewalk Improvements – Crystal Falls to Eagles Way

BOND

BOND NUMBER: _____
DATE: (Not later than Bid Due Date): _____
PENAL SUM: _____

IN WITNESS WHEREOF, Surety and Bidder, intending to be legally bound hereby, subject to the terms printed on the reverse side hereof, do each cause this Bid Bond to be duly executed on its behalf by its authorized officer, agent, or representative.

BIDDER

_____(Seal)
Bidder's Name and Corporate Seal

By: _____
Signature and Title

Attest: _____
Signature and Title

SURETY

_____(Seal)
Surety's Name and Corporate Seal

By: _____
Signature and Title
(Attach Power of Attorney)

Attest: _____
Signature and Title

Note: (1) Above addresses are to be used for giving required notice.
(2) Any singular reference to Bidder, Surety, Owner or other party shall be considered plural where applicable.

---

1. Bidder and Surety, jointly and severally, bind themselves, their heirs, executors, administrators, successors and assigns to pay to Owner upon default of Bidder any difference between the total amount of Bidder's bid and the total amount of the bid of the next lowest, responsible and responsive bidder as determined by Owner for the Work required by the Contract Documents, provided that:
   1.1 If there is no such lowest, responsible and responsive bidder, and Owner does not abandon the Project, then Bidder and Surety shall pay to Owner the penal sum set forth on the face of this Bond, and
   1.2 If no event shall Bidder's and Surety's obligation hereunder exceed the penal sum set forth on the face of this Bond.

2. Default of Bidder shall occur upon the failure of Bidder to deliver within the time required by the Bidding Documents (or any extension thereof agreed to in writing by Owner) the executed Agreement required by the Bidding Documents and any performance and payment bonds required by the Bidding Documents and Contract Documents .

3. This obligation shall be null and void if:
   3.1 Owner accepts Bidder's bid and bidder delivers within the time required by the Bidding Documents (or any extension thereof agreed to in writing by Owner) the executed Agreement required by the Bidding Documents and any performance and payment bonds required by the Bidding Documents and Contract Documents, or
   3.2 All bids are rejected by Owner, or
   3.3 Owner fails to issue a notice of award to Bidder within the time specified in the Bidding Documents (or any extension thereof agreed to in writing by Bidder and, if applicable, consented to by Surety when required by paragraph 5 hereof).

4. Payment under this Bond will be due and payable upon default by Bidder and within 30 calendar days after receipt by Bidder and Surety of written notice of default from Owner, which notice will be given with reasonable promptness, identifying this Bond and the Project and including a statement of the amount due.

5. Surety waives notice of and any and all defenses based on or arising out of any time extension to issue a notice of award agreed to in writing by Owner and Bidder, provided that the total time for issuing notice of award including extensions shall not in the aggregate exceed 120 days from Bid Due Date without Surety's written consent.

6. No suit or action shall be commenced under this Bond prior to 30 calendar days after the notice of default required in paragraph 4 above is received by Bidder and Surety and in no case later than one year after Bid Due Date.

7. Any suit or action under this Bond shall be commenced only in a court of competent jurisdiction located in the state in which the Project is located.

8. Notices required hereunder shall be in writing and sent to Bidder and Surety at their respective addresses shown on the face of this Bond. Such notices may be sent by personal delivery, commercial courier or by United States Registered or Certified Mail, return receipt requested, postage pre-paid, and shall be deemed to be effective upon receipt by the party concerned.

9. Surety shall cause to be attached to this Bond a current and effective Power of Attorney evidencing the authority of the officer, agent, or representative who executed this Bond on behalf of Surety to execute, seal and deliver such Bond and bind the Surety thereby,

10. This Bond is intended to conform to all applicable statutory requirements. Any applicable requirement of any applicable statute that has been omitted from this Bond shall be deemed to be included herein as if set forth at length. If any provision of this Bond conflicts with any applicable provision of any applicable statute, then the provision of said statute shall govern and the remainder of this Bond that is not in conflict therewith shall continue in full force and effect.

11. The term "bid" as used herein includes a bid, offer or proposal as applicable.

PROJECT IDENTIFICATION:

City of Leander
Bagdad Road Sidewalk Improvements – Crystal Falls to Eagles Way

CONTRACT IDENTIFICATION AND NUMBER:

City of Leander
Bagdad Road Sidewalk Improvements – Crystal Falls to Eagles Way

Engineer Project Number: LEAN.004

THIS BID IS SUBMITTED TO:

The Honorable Christopher Fielder, Mayor
City of Leander
200 W. Willis Street
Leander, TX 78641

1. The undersigned BIDDER proposes and agrees, if this Bid is accepted, to enter into an agreement with OWNER in the form included in the Contract Documents to perform and furnish all Work as specified or indicated in the Contract Documents for the Bid Price and within the Bid Times indicated in the Bid and in accordance with the other terms and conditions of the Contract Documents.

2. BIDDER accepts all of the terms and conditions of the Advertisement or Invitation to Bid and Instructions to Bidders, including without limitation those dealing with the disposition of Bid security. This Bid will remain subject to acceptance for ninety days after the day of Bid opening. BIDDER will sign and deliver the required number of counterparts of the Agreement with the Bonds and other documents required by the Bidding Requirements within fifteen days after the date of OWNER's Notice of Award.

3. In submitting this Bid, BIDDER represents, as more fully set forth in the Agreement, that:

   (a) BIDDER has examined and carefully studied the Bidding Documents and the following Addenda receipt of all which is hereby acknowledged: (List Addenda by Addendum Number and Date)

   _____

   _____

   _____

   (b) BIDDER has visited the site and become familiar with and is satisfied as to the general, local and site conditions that may affect cost, progress, performance and furnishing of the Work;

   (c) BIDDER is familiar with and is satisfied as to all federal, state and local Laws and Regulations that may affect cost, progress, performance and furnishing of the Work.

   (d) BIDDER has carefully studied all reports of explorations and tests of subsurface conditions at or contiguous to the site and all drawings of physical conditions in or relating to existing surface or subsurface structures at or contiguous to the site (except Underground Facilities) which have been identified in the Supplementary Conditions as provided in paragraph 4.2 of the General Conditions. BIDDER accepts the determination set forth in paragraph SC-4.2 of the Supplementary Conditions of the extent to the

"technical data" contained in such reports and drawings upon which BIDDER is entitled to rely as provided in paragraph 4.2 of the General Conditions. BIDDER acknowledges that such reports and drawings are not Contract Documents and may not be complete for BIDDERs purposes. BIDDER acknowledges that OWNER and Engineer do not assume responsibility for the accuracy or completeness of information and data shown or indicated in the Bidding Documents with respect to Underground Facilities at or contiguous to the site. BIDDER has obtained and carefully studied (or assumes responsibility for having done so) all such additional or supplementary examinations, investigations, explorations, tests, studies and data concerning conditions (surface, subsurface and Underground Facilities) at or contiguous to the site or otherwise which may affect cost progress, performance or furnishing of the Work or which relate to any aspect of the means, methods, techniques, sequences and procedures of construction to be employed by BIDDER and safety precautions and programs incident thereto. BIDDER does not consider that any additional examinations, investigations, explorations, tests, studies or data are necessary for the determination of this Bid for performance and furnishing of the Work in accordance with the times, price and other terms and conditions of the Contract Documents.

(e) BIDDER is aware of the general nature of Work to be performed by Owner and others at the site that relates to Work for which this Bid is submitted as indicated in the Contract Documents.

(f) BIDDER has correlated the information known to BIDDER, information and observations obtained from visits to the site, reports and drawings identified in the Contract Documents and all additional examinations, investigations, explorations, tests, studies and data with the Contract Documents.

(g) BIDDER has given ENGINEER written notice of all conflicts, errors, ambiguities or discrepancies that BIDDER has discovered in the Contract Documents and the written resolution thereof by ENGINEER is acceptable to BIDDER, and the Contract Documents are generally sufficient to indicate and convey understanding of all terms and conditions for performing and furnishing the Work for which this Bid is submitted.

(h) This Bid is genuine and not made in the interest of or on behalf of any undisclosed person, firm or corporation and is not submitted in conformity with any agreement or rules of any group, association, organization or corporation; BIDDER has not directly or indirectly induced or solicited any other Bidder to submit a false or sham Bid; BIDDER has not solicited or induced any person, firm or corporation to refrain from bidding; and BIDDER has not sought by collusion to obtain for itself any advantage over any other Bidder or over OWNER.

4. BIDDER agrees that the Work will be substantially complete within **120 calendar days** after the date when the Contract Times commences to run as provided in paragraph 2.3 of the General Conditions.

5. The following documents are attached to and made a condition of this Bid:

(a) Required Bid Security in the form of 5 percent.

(b) A tabulation of Subcontractors, Suppliers and other persons and organizations required to be identified in this Bid. Identification of other involved parties is subject to submission to the Owner within five (5) days after the Bid opening as provided in the Instructions to Bidders – Paragraph 13 (page IB-5).

(c) Required BIDDERs Qualification Statement with supporting data (submitted prior to bid).

(d) (Add other documents as pertinent.) Not applicable.

6. Communications concerning this Bid shall be addressed to:

The address of BIDDER indicated below.

Address:_____

_____

Phone: _____ Fax:_____

Email:_____

7. Terms used in this Bid which are defined in the General Conditions or Instructions will have the meanings indicated in the General Conditions or Instructions.

SUBMITTED on _____, 20_____.

State Contractor License No. _____.

8. The BIDDER will complete the Work for the price(s) indicated in the Bid Schedule (page PR-6).

If BIDDER is:

<u>An Individual</u>

By _____ (SEAL)
(Individual's Name)

doing business as _____

Business address: _____

_____

Phone No.: _____

<u>A Partnership</u>

By _____ (SEAL)
(Firm Name)

_____
(general partner)

Business address: _____

_____

Phone No.: _____

A Corporation

By _____
(Corporation)

_____
(state of incorporation)

By _____
(name of person authorized to sign)

_____
(Title)

(Corporate Seal)

Attest _____
(Secretary)

Business address: _____

_____

Phone No.: _____

A Joint Venture

By _____
(Name)

_____
(Address)

By _____
(Name)

_____
(Address)

(Each joint venturer must sign. The manner of signing for each individual, partnership and corporation that is a party to the joint venture should be in the manner indicated above).

City of Leander

Bagdad Road Sidewalk Improvements
Crystal Falls to Eagles Way
Bid Schedule

Spec No.	Item No.	Quantity	Unit	Description (with unit price in words)	Unit Price	Total Price
	BASE BID					
100-2002	1.01	4,175	LF	PREPARING ROW at_____ Dollars and_____ Cents	$	$
				per linear foot		
104-2015	1.02	9	SY	REMOVING CONC, SIDEWALK at_____ Dollars and_____ Cents	$	$
				per square yard		
162-2002	1.03	5,900	SY	BLOCK SODDING (BERMUDA), INCL WATER at_____ Dollars and_____ Cents	$	$
				per square yard		
420-2001	1.04	165	SY	CL A CONC, CHANNEL at_____ Dollars and_____ Cents	$	$
				per square yard		
420-0000	1.05	4	EA	CL C CONC, BRIDGE ABUTMENTS at_____ Dollars and_____ Cents	$	$
				per each		
LEAN-01	1.06	2	EA	50' PED BRIDGE, PREFAB H SEC TRUSS at_____ Dollars and_____ Cents	$	$
				per each		
LEAN-02	1.07	2,060	LF	LIMESTONE FACED CONC WALL (HEIGHT VARIES) at_____ Dollars and_____ Cents	$	$
				per linear foot		
432-2042	1.08	90	SY	RIRPRAP, STONE TY R, GROUT, 12 IN at_____ Dollars and_____ Cents	$	$
				per square yard		
432-2035	1.09	274	SY	RIRPRAP, CONC, 6 IN at_____ Dollars and_____ Cents	$	$
				per square yard		
460-PLAN	1.10	4	EA	MOD EX CMP CULVERT, CONNECT TO JUNCT BOX at_____ Dollars and_____ Cents	$	$
				per each		
465-PLAN	1.11	3	EA	PRECAST JUNCT BOX, 3'X3', GRATE COVER at_____ Dollars and_____ Cents	$	$
				per each		
465-PLAN	1.12	4	EA	PRECAST JUNCT BOX, 3'X3', ACCESS COVER at_____ Dollars and_____ Cents	$	$
				per each		

City of Leander

Bagdad Road Sidewalk Improvements

Crystal Falls to Eagles Way

Bid Schedule

Spec No.	Item No.	Quantity	Unit	Description (with unit price in words)	Unit Price	Total Price
464-2001	1.13	20	LF	RC PIPE, CL III, 12 IN at_____ Dollars and_____ Cents	$ _____	$ _____
				per linear foot		
464-2003	1.14	550	LF	RC PIPE, CL III, 18 IN at_____ Dollars and_____ Cents	$ _____	$ _____
				per linear foot		
464-2004	1.15	80	LF	RC PIPE, CL III, 21 IN at_____ Dollars and_____ Cents	$ _____	$ _____
				per linear foot		
467-2222	1.16	1	EA	SET, TY 2, 18", RCP, 4:1, C at_____ Dollars and_____ Cents	$ _____	$ _____
				per each		
467-2235	1.17	4	EA	SET, TY 2, 24", RCP, 4:1, C at_____ Dollars and_____ Cents	$ _____	$ _____
				per each		
479-2004	1.18	4	EA	ADJ MANHOLE/VALVE TO GRADE, BLOCK OUT at_____ Dollars and_____ Cents	$ _____	$ _____
				per each		
502-2001	1.19	4	MO	BARRICADES, SIGNS AND TRAFFIC HANDLING at_____ Dollars and_____ Cents	$ _____	$ _____
				per month		
506-2034	1.20	320	LF	SILT FENCE at_____ Dollars and_____ Cents	$ _____	$ _____
				per linear foot		
530-6005	1.21	90	SY	DRIVEWAYS, ASPH REPAIR at_____ Dollars and_____ Cents	$ _____	$ _____
				per square yard		
531-2010	1.22	15	EA	CURB RAMP, TY 7 at_____ Dollars and_____ Cents	$ _____	$ _____
				per each		
531-2004	1.23	70	SY	CONC SIDEWALKS, 6" at_____ Dollars and_____ Cents	$ _____	$ _____
				per square yard		
531-2015	1.24	3,615	SY	CONC SIDEWALKS, 4" at_____ Dollars and_____ Cents	$ _____	$ _____
				per square yard		

City of Leander

Bagdad Road Sidewalk Improvements
Crystal Falls to Eagles Way
Bid Schedule

Spec No.	Item No.	Quantity	Unit	Description (with unit price in words)	Unit Price	Total Price
531-6032	1.25	69	SY	CONC SIDEWALK, ELEVATED PER DETAIL at_____ Dollars and_____ Cents	$ _____	$ _____
				per square yard		
644-2059	1.26	2	EA	RELOCATE SM RD SN SUP & AM TY TWT at_____ Dollars and_____ Cents	$ _____	$ _____
				per each		
666-2042	1.27	780	LF	REF PAV MRK, TY I, W, 12", SLD, 100MIL at_____ Dollars and_____ Cents	$ _____	$ _____
				per linear foot		
500-2001	1.28	1	LS	MOBILIZATION at_____ Dollars and_____ Cents	$ _____	$ _____
				per lump sum		

TOTAL AMOUNT BASE BID: $ _____

BID SUMMARY

BID SCHEDULE NO.:

1 **TOTAL AMOUNT BASE BID:** $ _____

It is understood the quantities of work to be done at unit prices are approximate and are intended for bidding purposes only. Amounts are to be shown in both words and figures. In case of discrepancy the amount shown in words shall govern.

Reference is hereby made to the Measurement and Payment Section of the Technical Specifications for further descriptions of all Bid Schedule work items.

Owner reserves the right to delete certain items of work via a change order at the time of award of the contract to delete bid item quantities to reduce project cost within available funding at the time of award and execution of the contract.

Owner reserves the right to reject total of Bid Schedules for the Contract.

NOTICE OF AWARD

Dated:_____

TO:_____
(BIDDER)

ADDRESS:_____

_____

OWNER'S PROJECT NO.: LEAN.004

PROJECT: City of Leander – Bagdad Road Sidewalk Improvements, Crystal Falls to Eagles Way

OWNER'S CONTRACT NO.: LEAN.004

PROJECT: City of Leander – Bagdad Road Sidewalk Improvements, Crystal Falls to Eagles Way

---

You are notified that your Bid dated _____, 2015 for the above Contract has been considered. You are the apparent successful bidder and an award has been made to your firm for the Base Bid work items as listed in the Bid Form.

The Contract Price of your contract is _____ ($_____).

Four (4) copies of each of the proposed Contract Documents (except Drawings) accompany this Notice of Award. Four (4) sets of the Drawings will be delivered separately or otherwise made available to you immediately.

You must comply with the following conditions within fifteen days of the date of this Notice of Award, that is by _____, 2015.

1. You must deliver to the OWNER four (4) fully executed counterparts of the Agreement including all the Contract Documents.

2. You must deliver along with the executed Agreement the Contract Security (Bonds) as specified in the instructions to Bidders (paragraph 20), General Conditions (paragraph 5.1) and Supplementary Conditions (paragraph SC-5.1).

3. Other conditions:

   a. Please forward Insurance Certificates as specified in the General Conditions (paragraphs 5.3 and 5.4) and Supplementary Conditions (paragraphs SC-5.4 and SC-5.6) with your executed contracts.

   b. Supply the Engineer with the Separation of Materials Form for Tax purposes as specified in the Supplementary Conditions, SC-6.10.

c. Provide the Engineer with a breakdown of all lump sum prices (for payment purposes).

d. Provide the Engineer with a Project Schedule.

e. Provide the Engineer with a schedule of Anticipated Payments.

Failure to comply with these conditions within the time specified will entitle OWNER to consider your bid abandoned, to annul this Notice of Award and to declare your Bid Security forfeited.

By: _____

City of Leander

Acceptance of Notice

Receipt of the above Notice of Award is hereby acknowledged

By _____

this _____ day of _____, 2015

By _____

Title _____

THE STATE OF TEXAS §
§ **KNOW ALL BY THESE PRESENTS:**
COUNTY OF WILLIAMSON §

THIS AGREEMENT is made and entered into on this ____day of the month of _____, 2015, by and between the City of Leander, Texas, a home-rule city and municipal corporation with principal offices located at 200 W. Willis Street, Leander, Williamson and Travis Counties, Texas, 78641 (hereinafter referred to as "Owner" or the "City"),and_____, with principal offices located at _____, (hereinafter referred to as "Contractor").

That, for and in consideration of the mutual terms, conditions and covenants of this Agreement and the accompanying documents between Owner and Contractor and for and in consideration of payments as set forth therein, Contractor hereby agrees to commence and complete the following Project: **Bagdad Road Sidewalk Improvements, Crystal Falls to Eagles Way,** consisting of furnishing all the materials, supplies, machinery, equipment, tools, superintendence, labor, insurance, and other accessories and services necessary to construct and complete the **Bagdad Road Sidewalk Improvements, Crystal Falls to Eagles Way**, together with any and all extra work as described in the drawings, maps, plans, and specifications (the "Project" or "Work"), in accordance with Instructions to Bidders, the Notices to Bidders, the General Conditions, the Bid Proposal, technical specifications, maps and plans, Performance bond, Payment bond, and other drawings and printed or written explanatory matter thereof, and the addenda thereof, all as prepared by Land Design Partners and approved by the Owner, all of which are made a part hereof and collectively evidence and constitute the entire contract (the "Contract Documents").

Contractor hereby agrees to commence Work within ten (10) calendar days following the date contained in the Notice to Proceed issued by Owner, and Contractor hereby agrees to substantially complete same within one hundred and twenty (120) calendar days after the date contained in the Notice to Proceed.

Waiver of any breach of this Agreement shall not constitute waiver of any subsequent breach.

Owner agrees to pay Contractor from available funds for satisfactory performance of this Agreement the price or prices as shown in the approved Bid Proposal submitted by the Contractor for the Project, which forms a part of this contract and has been approved by the Owner, in the total amount of _____*(amount expressed in numerals)* _____, *(amount expressed in words)*, subject to proper additions and deductions (the "Contract Amount"), all as provided in the General Conditions of this Agreement, and Owner agrees to make payments on account thereof as provided therein. The financial obligations of the City under this Agreement shall be paid from current funds and shall be subject to funds being appropriated and budgeted in sufficient amounts to satisfy such obligations.

Although drawn by Owner, both parties hereto expressly agree and assert that in the event of any dispute over its meaning or application, this Agreement shall be interpreted reasonably and fairly, and neither more strongly for nor against either party.

IN WITNESS WHEREOF, both parties have caused this Agreement to be signed in their respective corporate names by duly authorized representatives, and the parties hereby bind themselves, their successors and assigns for the faithful and full performance of the terms and provisions hereof.

EXECUTED on the latest date of the signatories indicated below.

CITY OF LEANDER

By: _____
Kent Cable, City Manager

Date: _____

CONTRACTOR

By: _____
Name & Title: _____

ATTESTED: _____, City Secretary

STANDARD FORM OF AGREEMENT BETWEEN OWNER AND CONTRACTOR ON THE BASIS OF A STIPULATED PRICE

Prepared by

ENGINEERS' JOINT CONTRACT DOCUMENTS COMMITTEE

and

Issued and Published Jointly By

PROFESSIONAL ENGINEERS IN PRIVATE PRACTICE

A practice division of the

NATIONAL SOCIETY OF PROFESSIONAL ENGINEERS

AMERICAN CONSULTING ENGINEERS COUNCIL

AMERICAN SOCIETY OF CIVIL ENGINEERS

CONSTRUCTION SPECIFICATIONS INSTITUTE

This document has been approved and endorsed by
The Associated General Contractors of America

EJDC
STANDARD FORM OF AGREEMENT
BETWEEN OWNER AND CONTRACTOR
ON THE BASIS OF A STIPULATED PRICE

THIS AGREEMENT is dated as of the _____in the year 2015 by and between the City of Leander and _____ (hereinafter called CONTRACTOR). OWNER AND CONTRACTOR, in consideration of the mutual covenants hereinafter set forth, agree as follows:

ARTICLE 1. WORK.

CONTRACTOR shall complete all Work as specified or indicated in the Contract Documents. The Work is generally described as follows:

City of Leander
Bagdad Road Sidewalk Improvements, Crystal Falls to Eagles Way

The Project for which the Work under the Contract Documents may be the whole or only a part is generally described as follows:

City of Leander
Bagdad Road Sidewalk Improvements, Crystal Falls to Eagles Way

ARTICLE 2. ENGINEER.

The Project has been designed by: KSA Engineers, Inc.
4833 Spicewood Springs Road, Suite 204
Austin, Texas 78759 (512-342-6868)

who is hereinafter called the ENGINEER and who is to act as OWNER's representative, assume all duties and responsibilities and have the rights and authority assigned to ENGINEER in the Contract Documents in connection with completion of the Work in accordance with the Contract Documents.

ARTICLE 3. CONTRACT TIME.

3.1. The Work will be substantially completed within **120 days** from the date when the Contract Time commences to run as provided in paragraph 2.3 of the General Conditions. All work required for final completion and acceptance by the Owner, including but not necessarily limited to all final inspection items, shall be completed within 60 days from the date of substantial completion.

3.2. **Liquidated Damages**. OWNER and CONTRACTOR recognize that time is of the essence of this Agreement and that OWNER will suffer financial loss if the Work is not completed within the times specified in paragraph 3.1 above, plus any extensions thereof allowed in accordance with Article 12 of the General Conditions. They also recognize the delays, expense and difficulties involved in proving the actual loss suffered by OWNER if the Work is not completed on time. Accordingly, instead of requiring any such proof, OWNER and CONTRACTOR agree that as liquidated damages for delay (but not as a penalty) CONTRACTOR shall pay OWNER Five Hundred DOLLARS ($500.00) for each day that expires after the time specified in paragraph 3.1 for Substantial Completion until the Work is substantially complete.

ARTICLE 4. CONTRACT PRICE.

Owner shall pay CONTRACTOR for completion of the Work in accordance with the Contract Documents in an amount in current funds equal to the prices or prices shown in the proposal included with this form.

This project is being funded by the City of Leander. The Contractor will look solely to Owner for payment of all sums due under this contract.

As provided in paragraph 11.3 of the General Conditions, estimated unit price quantities are not guaranteed, and determinations of actual quantities and classification are to be made by ENGINEER as provided in paragraph 9.8 of the General Conditions. Unit prices have been computed as provided in paragraph 11.3 of the General Conditions.

ARTICLE 5. PAYMENT PROCEDURES.

CONTRACTOR shall submit Applications for Payment in accordance with Article 14 of the General Conditions. Applications for Payment will be processed by ENGINEER as provided in the General Conditions.

5.1. **Progress Payments; Retainage**. OWNER shall make progress payments on account of the Contract Price on the basis of CONTRACTOR's Applications for Payment as recommended by ENGINEER, on or about the 25th day of each month during construction as provided in paragraphs 5.1.1 and 5.1.2 below. All such payments will be measured by the schedule of values established in paragraph 2.07 of the General Conditions (and in the case of Unit Price Work based on the number of units completed) or, in the event there is no schedule of values, as provided in the General Requirements.

5.1.1 Progress payments will be made in an amount equal to the percentage indicated below, but, in each case, less the aggregate of payments previously made and less such amounts as ENGINEER shall determine, or Owner may withhold, in accordance with paragraph 14.2 of the General Conditions.

In making progress payments, 5 percent of the estimated amount shall be retained until final completion and acceptance of the contract work.

5.2. **Final Payment**. Upon final completion and acceptance of the Work in accordance with paragraph 14.12 of the General Conditions, OWNER shall pay the remainder of the Contract Price as recommended by ENGINEER as provided in said paragraph 14.12.

ARTICLE 6. INTEREST.

All moneys not paid when due as provided in Article 14 of the General Conditions shall bear interest at the maximum rate allowed by law at the place of the Project.

ARTICLE 7. CONTRACTOR'S REPRESENTATIONS.

In order to induce OWNER to enter into this Agreement CONTRACTOR makes the following representations:

7.1. CONTRACTOR has examined and carefully studied the Contract Documents (including the Addenda listed in paragraph 8) and the other related data identified in the Bidding Documents including "technical data."

7.2. CONTRACTOR has visited the site and become familiar with and is satisfied as to the general, local and site conditions that may affect cost, progress, performance and furnishing of the Work.

7.3. CONTRACTOR is familiar with and is satisfied as to all federal, state and local Laws and Regulations that may affect cost, progress, performance and furnishing of the Work.

7.4. CONTRACTOR has carefully studied all reports of explorations and tests of subsurface conditions at or contiguous to the site and all drawings of physical conditions in or relating to existing surface or subsurface structures at or contiguous to the site (except underground Facilities) which have been identified in the Supplementary Conditions as provided in paragraph 4.2 of the General Conditions. CONTRACTOR accepts the determination set forth in paragraph SC-4.2 of the Supplementary Conditions of the extent of the "technical data" contained in such reports and drawings upon which CONTRACTOR is entitled to rely as provided in paragraph 4.2 of the General Conditions. CONTRACTOR acknowledges that such reports and drawings are not Contract Documents and may not be complete for Contractor's purposes. CONTRACTOR acknowledges that OWNER and ENGINEER do not assume responsibility for the accuracy or completeness of information and data shown or indicated in the Contract Documents with respect to Underground Facilities at or contiguous to the site. CONTRACTOR has obtained and carefully studied (or assumes responsibility for having done so) all such additional supplementary examinations, investigations, explorations, tests, studies and data concerning conditions (surface, subsurface and Underground Facilities) at or contiguous to the site or otherwise which may affect cost, progress, performance or furnishing of the Work or which relate to any aspect of the means, methods, techniques, sequences and procedures of construction to be employed by CONTRACTOR and safety precautions and programs incident thereto. CONTRACTOR does not consider that any additional examinations, investigations, explorations, tests, studies or data are necessary for the performance and furnishing of the Work at the Contract Price, within the Contract Times and in accordance with the other terms and conditions of the Contract Documents.

7.5. CONTRACTOR is aware of the general nature of the work to be performed by OWNER and others at the site that relates to the Work as indicated in the Contract Documents.

7.6. CONTRACTOR has correlated the information known to CONTRACTOR, information and observations obtained from visits to the site, reports and drawings identified in the Contract Documents and all additional examinations, investigations, explorations, tests, studies and data with the Contract Documents.

7.7 CONTRACTOR has given ENGINEER written notice of all conflicts, errors, ambiguities or discrepancies that CONTRACTOR has discovered in the Contract Documents and the written resolution thereof by ENGINEER is acceptable to CONTRACTOR, and the Contract Documents are generally sufficient to indicate and convey understanding of all terms and conditions for performance and furnishing of the Work.

ARTICLE 8. CONTRACT DOCUMENTS.

The Contract Documents which comprise the entire agreement between OWNER and CONTRACTOR concerning the Work consist of the following:

8.1. This Agreement (pages 1 to 5, inclusive).

8.2. Performance Bonds and Payment Bonds, identified as exhibits PB1 - PB4, consisting of 2 pages

8.3. Notice of Award

8.4 Notice to Proceed

8.5. Certificate of Insurance

8.6. Separation of Materials Form

8.7. General Conditions

8.8. Supplementary Conditions

8.9 Contract Conditions

8.10 Technical Specifications bearing the title of City of Leander, Bagdad Road Sidewalk Improvements, Crystal Falls to Eagles Way

8.11. Drawings bearing the title City of Leander, Bagdad Road Sidewalk Improvements, Crystal Falls to Eagles Way

8.12. Addendum _____

8.13. CONTRACTOR'S Bid (pages PR-1 through PR-8) plus Bid Schedule, inclusive).

8.14. The following which may be delivered or issued after the Effective Date of the Agreement and are not attached hereto: All Written Amendments and other documents amending, modifying, or supplementing the Contract Documents pursuant to paragraph 3.5 of the General Conditions.

The documents listed in paragraphs 8.2 et seq. above are attached to this Agreement (except as expressly noted otherwise above).

There are no Contract Documents other than those listed above in this Article 13. The Contract Documents may only be amended, modified or supplemented as provided in paragraph 3.5 of the General Conditions.

ARTICLE 9. MISCELLANEOUS.

9.1. Terms used in this Agreement which are defined in Article 1 of the General Conditions will have the meanings indicated in the General Conditions.

9.2. No assignment by a party hereto of any rights under or interests in the Contract Documents will be binding on another party hereto without the written consent of the party sought to be bound; and specifically but without limitation moneys that may become due and moneys that are due may not be assigned without such consent (except to the extent that the effect of this restriction may be limited by law), and unless specifically stated to the contrary in any written consent to an assignment no assignment will release or discharge the assignor from any duty or responsibility under the Contract Documents.

9.3. OWNER and CONTRACTOR each binds itself, its partners, successors, assigns and legal representatives to the other party hereto, its partners, successors, assigns and legal representatives in respect to all covenants, agreements and obligations contained in the Contract Documents.

9.4 Any provisions or part of the Contract Documents held to be void or unenforceable under any Law or Regulation shall be deemed stricken, and all remaining provisions shall continue to be valid and binding upon OWNER and CONTRACTOR, who agree that the Contract Documents shall be reformed to replace such stricken provision or part thereof with a valid and enforceable provision that comes as close as possible to expressing the intention of the stricken provision.

IN WITNESS WHEREOF, OWNER AND CONTRACTOR have signed this Agreement for four (4) originals. One counterpart each has been delivered to OWNER, CONTRACTOR (2), and ENGINEER. All portions of the Contract Documents have been signed, initialed or identified by OWNER and CONTRACTOR or by ENGINEER on their behalf.

This Agreement will be effective on _____, 2015.

OWNER:
City of Leander

By: _____

[CORPORATE SEAL]

Attest _____

Address for giving notices:

200 W. Willis Street

Leander, Texas 78641

(If OWNER is a public body, attach evidence of authority to sign and resolution or other documents authorizing execution of Agreement.)

CONTRACTOR:
_____

By: _____

[CORPORATE SEAL]

Attest _____

Address for giving notices:

_____

_____

License No.: _____

Agent for service of process: _____

_____

(If CONTRACTOR is a corporation, attach evidence of authority to sign.)

PERFORMANCE BOND

THE STATE OF TEXAS **§** **BOND NO. _____**

COUNTY OF _____ **§**

KNOW ALL BY THESE PRESENTS, THAT : _____of the City of_____, County of _____,and State of _____, as PRINCIPAL, and _____, a corporation organized and existing under the laws of _____ and authorized under the laws of the State of Texas to act as SURETY on bonds for PRINCIPALS, are held and firmly bound unto the City of Leander, Texas (OWNER), in the penal sum of _____Dollars ($_____) for the payment whereof, the said PRINCIPAL and SURETY bind themselves and their heirs, administrators, executors, successors and assigns, jointly and severally, firmly by these presents:

WHEREAS, the PRINCIPAL has entered into a certain written Contract with the OWNER, dated the _____ day of _____, 2009, for the construction of the Bagdad Road Sidewalk Improvements, Crystal Falls to Eagles Way to which Contract is hereby referred to and made a part hereof as fully and to the same extent as if copied at length herein.

NOW, THEREFORE, THE CONDITIONS OF THIS OBLIGATION ARE SUCH, that if the said PRINCIPAL shall faithfully perform the work in accordance with the plans, specifications and under said Contract and shall in all respects duly and faithfully observe and perform all and singular the covenants, conditions and agreements in and by said Contract agreed and covenanted by the PRINCIPAL to be observed and performed, and according to the true intent and meaning of said Contract and the Plans and Specifications thereto annexed, then this obligation shall be void; otherwise to remain in full force and effect;

PROVIDED, HOWEVER, that this bond is executed pursuant to the provisions of Texas Gov't Code Chapter 2253 as amended and all liabilities on this bond shall be determined in accordance with the provisions of said Article to the same extent as if it were copied at length herein.

OWNER may draw on any part or all of the total amount of this bond by submitting a written request for a draw from the OWNER'S Public Works Director or designee to SURETY'S Attorney-in fact.

SURETY, for value received, stipulates and agrees that no change, extension of time, alteration or addition to the terms of the Contract, or to the work performed thereunder, or the Plans, specifications or drawings accompanying the same, shall in any way affect its obligation on this bond, and it does hereby waive notice of any such change, extension of time, alteration or addition to the terms of the Contract, or to the work to be performed thereunder.

IN WITNESS WHEREOF, the said PRINCIPAL and SURETY have signed and sealed this instrument this ____ day of _____, 20____.

_____ _____

Principal
By:_____

Title:_____

Address:_____

Surety
By:_____

Title:_____

Address:_____

_____ _____

The name and address of the Resident Agent of Surety is:
(Seal)

PAYMENT BOND

THE STATE OF TEXAS §
§
COUNTY OF WILLIAMSON §

Bond No._____

KNOW ALL BY THESE PRESENTS:

That _____, of the City of _____, County of _____, and State of _____ as Principal, and _____ authorized under the laws of the State of Texas to act as Surety on Bonds for Principals, are held and firmly bound unto **THE CITY OF LEANDER, (Owner)**, and all subcontractors, workers, laborers, mechanics and suppliers as their interest may appear, all of whom shall have the right to sue upon this bond, in the penal sum of _____ Dollars ($ _____) for the payment whereof, well and truly be made the said Principal and Surety bind themselves and their heirs, administrators, executors, successors, and assigns, jointly and severally, by these presents:

WHEREAS, the Principal has entered into a certain written Contract with the Owner, dated the _____ day of _____, 200__, for the construction of the Bagdad Road Sidewalk Improvements, Crystal Falls to Eagles Way to which Contract is hereby referred to and made a part hereof as fully and to the same extent as if copied at length herein.

NOW, THEREFORE, THE CONDITION OF THIS OBLIGATION IS SUCH, that if the said Principal shall well and truly pay all subcontractors, workers, laborers, mechanics, and suppliers, all monies to them owing by said Principals for subcontracts, work, labor, equipment, supplies and materials done and furnished for the construction of the improvements of said Contract, then this obligation shall be and become null and void; otherwise to remain in full force and effect.

PROVIDED, HOWEVER, that this bond is executed pursuant to the provisions of Chapter 2253, Texas Government Code, as amended, and all liabilities on this bond shall be determined in accordance with the provisions of said Chapter 2253 to the same extent as if it were copied at length herein.

Surety, for value received, stipulates and agrees that no change, extension of time, alteration or addition to the terms of the Contract, or to the work performed thereunder, or the plans, specifications or drawings accompanying the same shall in any way affect its obligation on this bond, and it does hereby waive notice of any such change, extension of time, alteration or addition to the terms of the contract, or to the work to be performed thereunder.

IN WITNESS WHEREOF, the said Principal and Surety have signed and sealed this instrument this_____ day of _____, 20__.

_____	_____
Principal	Surety
_____	_____
Name & Title	Name & Title
By: _____	By: _____
Address: _____	Address:_____
_____	_____

Resident Agent of Surety:

_____	_____
Signature	Printed Name

Address: _____

SECTION SM - SEPARATION OF MATERIALS FORM

The successful Bidder shall prepare an itemized list of materials (including his prices to Owner) which are to be incorporated into the project and/or furnished to the Owner uninstalled. Consumable materials including motor fuel are excluded from this list.

This is a list of materials which, for sales tax purposes, are considered sold by the Contractor to the owner who is a sales tax exempt entity. Such materials are thus exempt from any sales taxes, either on the Contractor's purchase of the materials for resale or on his resale to the Owner.

The level of detail in this breakdown is at the discretion of the Contractor, with the understanding that the Contractor is responsible for furnishing required documentation to the State Comptroller. Major material purchases should be included to ensure their tax exempt status.

Material quantities in this breakdown should be limited to the amounts reasonably necessary for completion of the project. Excess materials which are used on another project may become subject to sales tax if not properly documented.

The Contractor's material prices to the Owner must be no less than his purchase price and may include transportation and handling costs plus a reasonable profit.

The total material price in the required breakdown must equal the total material price listed below. The breakdown must be mathematically correct before it will be approved by the Engineer and incorporated into the contract documents as sales tax exempt.

The material price breakdown shall be submitted with this form before execution of the contract documents. Otherwise, the Contractor may risk losing his sales tax exemption for this project.

1.	TOTAL CONTRACT AMOUNT (As Awarded)	$_____
2.	SALES TAX EXEMPT MATERIALS (All materials which are (a) furnished by Contractor and incorporated into completed project or (b) furnished uninstalled by Contractor to Owner)	$_____
3.	OTHER COSTS (Including installation and consumable materials)	$_____

NOTES:

1. Line 1 = contract price as awarded.
2. Line 2 + Line 3 <u>must</u> equal Line 1.
3. Line 2 must be <u>not less than</u> Contractor's anticipated invoice price for all sales tax exempt materials.

CERTIFICATE OF INSURANCE

TO: Date:_____

Project No.: LEAN.004

Owner

Type of Project: City of Leander
Bagdad Road Sidewalk Improvements, Crystal Falls
To Eagles Way

Address: City of Leander
200 W. Willis Street
Leander, TX 78641

THIS IS TO CERTIFY THAT:_____
(Name and address of insured)

is, at the date of this certificate, insured by this Company with respect to the business operations hereinafter described, for the types of Insurance and in accordance with the provisions of the standard policies used by this Company, and further hereinafter described. Exceptions to standard policy noted on reverse side hereof.

	Policy No.	Effective	Expires	Limits of Liability
Workmen's Compensation				
Public Liability				1 Person $ 1Accident
Contingent Liability				1 Person $ 1Accident
Property Damage				
Builder's Risk				
Automobile				
Other				

The foregoing Policies (do) (do not) cover all sub-contractors.

Locations Covered: _____

Descriptions of Operations Covered: _____

Additional Insured: ***City of Leander and KSA Engineers, Inc.***

The above policies either in the body thereof or by appropriate endorsement provide that they may not be changed or canceled by the insurer in less than ten days after the insured has received written notice of such change or cancellation.

Where applicable local laws or regulations require more than ten days actual notice of change or cancellation to the assured, the above policies contains such special requirements, either in the body thereof or by appropriate endorsement thereto attached.

_____
(Name of Insurer)

By_____

Title_____

NOTICE TO PROCEED

Dated _____ 2015

TO: _____
(CONTRACTOR)

ADDRESS: _____

_____

OWNER'S PROJECT NO.: LEAN.004

PROJECT: City of Leander – Bagdad Road Sidewalk Improvements, Crystal Falls To Eagles Way

You are notified that the Contract Times under the above contract will commence to run on:
_____.

By that date, you are to start performing your obligations under the Contract Documents. In accordance with Paragraphs 1.38 and 14.13 of the General Conditions the dates of Substantial Completion and completion and readiness for final payment is _____.

Before you may start any Work at the site, Paragraphs 2.5, 2.6, and 2.7 of the General Conditions provides, in part, that the Contractor must deliver to the Owner (with copies to ENGINEER and other identified additional insureds) certificates of insurance which Contractor is required to purchase and maintain in accordance with the General Provisions.

Also before you may start any Work at the site, you must:

_____

ACCEPTANCE OF NOTICE

City of Leander	_____
OWNER	CONTRACTOR
By: _____	By: _____
(AUTHORIZED SIGNATURE)	(AUTHORIZED SIGNATURE)
Kent Cagle City Manager	Title: _____
Date: _____	Date: _____

STANDARD

GENERAL CONDITIONS

OF THE

CONSTRUCTION CONTRACT

Prepared by

Engineers Joint Contract Documents Committee

and Issued and Published by

PROFESSIONAL ENGINEERS IN PRIVATE PRACTICE
A practice division of the
NATIONAL SOCIETY OF PROFESSIONAL ENGINEERS

AMERICAN CONSULTING ENGINEERS COUNCIL

AMERICAN SOCIETY OF CIVIL ENGINEERS

CONSTRUCTION SPECIFICATIONS INSTITUTE

This document has been approved and endorsed by
The Associated General Contractors of America

TABLE OF CONTENTS OF GENERAL CONDITIONS

Article or Paragraph Number & Title		*Page Number*
1.	DEFINITIONS	13
	Addenda	13
1.2	Agreement	13
1.3	Application for Payment	13
1.4	Asbestos	13
1.5	Bid	13
1.6	Bidding Documents	13
1.7	Bidding Requirements	13
1.8	Bonds	13
1.9	Change Order	13
1.10	Contract Documents	13
1.11	Contract Price	13
1.12	Contract Times	13
1.13	CONTRACTOR	13
1.14	*defective*	13
1.15	Drawings	13
1.16	Effective Date of the Agreement	13
1.17	ENGINEER	13
1.18	ENGINEER's Consultant	13
1.19	Field Order	13
1.20	General Requirements	13
1.21	Hazardous Waste	13
1.22	Laws and Regulations; Laws or Regulations	13
1.23	Liens	13
1.24	Milestone	13
1.25	Notice of Award	13
1.26	Notice to Proceed	14
1.27	OWNER	14
1.28	Partial Utilization	14
1.29	PCBs	14
1.30	Petroleum	14
1.31	Project	14
1.32	Radioactive Material	14
1.33	Resident Project Representative	14
1.34	Samples	14
1.35	Shop Drawings	14
1.36	Specifications	14
1.37	Subcontractor	14
1.38	Substantial Completion	14
1.39	Supplementary Conditions	14
1.40	Supplier	14
1.41	Underground Facilities	14
1.42	Unit Price Work	14
1.43	Work	14
1.44	Work Change Directive	14
1.45	Written Amendment	14
2.	PRELIMINARY MATTERS	14
2.1	Delivery of Bonds	14
2.2	Copies of Documents	15
2.3	Commencement of Contract Times; Notice to Proceed	15
2.4	Starting the Work	15
2.5-2.7	Before Starting Construction; CONTRACTOR's Responsibility to Report; Preliminary Schedules; Delivery of Certificates of Insurance	15
2.8	Preconstruction Conference	15
2.9	Initially Acceptable Schedules	15
3.	CONTRACT DOCUMENTS: INTENT, AMENDING, REUSE	15
1.1		
3.1-3.2	Intent	15
3.3	Reference to Standards and Specifications of Technical Societies; Reporting and Resolving Discrepancies	15
3.4	Intent of Certain Terms or Adjectives	16
3.5	Amending Contract Documents	16
3.6	Supplementing Contract Documents	16
3.7	Reuse of Documents	16
4.	AVAILABILITY OF LANDS: SUBSURFACE AND PHYSICAL CONDITIONS; REFERENCE POINTS	16
4.1	Availability of Lands	16
4.2	Subsurface and Physical Conditions	16
4.2.1	Reports and Drawings	16
4.2.2	Limited Reliance by CONTRACTOR Authorized; Technical Data	17
4.2.3	Notice of Differing Subsurface or Physical Conditions	17
4.2.4	ENGINEER's Review	17
4.2.5	Possible Contract Documents Change	17
4.2.6	Possible Price and Times Adjustments	17
4.3	Physical Conditions-Underground Facilities	17
4.3.1	Shown or Indicated	18
4.3.2	Not Shown or Indicated	18
4.4	Reference Points	18
4.5	Asbestos, PCBs, Petroleum, Hazardous Waste or Radioactive Material	18
5.	BONDS AND INSURANCE	18
5.1-5.2	Performance, Payment and Other Bonds	18
5.3	Licensed Sureties and Insurers; Certificates of Insurance	19
5.4	CONTRACTOR's Liability Insurance	19
5.5	OWNER's Liability Insurance	19
5.6	Property Insurance	19
5.7	Boiler and Machinery or Additional Property Insurance	20
5.8	Notice of Cancellation Provisions	20
5.9	CONTRACTOR's Responsibility for Deductible Amounts	20
5.10	Other Special Insurance	20

Article or Paragraph Number & Title		Page Number
5.11	Waiver of Rights	20
5.12-5.13	Receipt and Application of Insurance Proceeds	20
5.14	Acceptance of Bonds and Insurance; Option to Replace	21
5.15	Partial Utilization-Property Insurance	21
6.	CONTRACTOR's RESPONSIBILITIES	21
6.1-6.2	Supervision and Superintendence	21
6.3-6.5	Labor, Materials and Equipment	21
6.6	Progress Schedule	21
6.7	Substitutes and "Or-Equal" Items; CONTRACTOR's Expense; Substitute Construction Methods or Procedures; ENGINEER's Evaluation	21
6.8-6.11	Concerning Subcontractors, Suppliers and Others; Waiver of Rights	22
6.12	Patent Fees and Royalties	22
6.13	Permits	23
6.14	Laws and Regulations	23
6.15	Taxes	23
6.16	Use of Premises	23
6.17	Site Cleanliness	23
6.18	Safe Structural Loading	24
6.19	Record Documents	24
6.20	Safety and Protection	24
6.21	Safety Representative	24
6.22	Hazard Communication Programs	24
6.23	Emergencies	24
6.24	Shop Drawings and Samples	24
6.25	Submittal procedures; CONTRACTOR's Review Prior to Shop Drawing or Sample Submittal	25
6.26	Shop Drawing & Sample Submittals Review by ENGINEER	25
6.27	Responsibility for Variation From Contract Documents	25
6.28	Related Work Performed Prior to ENGINEER's Review and Approval of Required Submittals	25
6.29	Continuing the Work	25
6.30	CONTRACTOR's General Warranty and Guarantee	25
6.31-6.33	Indemnification	25
6.34	Survival of Obligations	26
7.	OTHER WORK	26
7.1-7.3	Related Work at Site	26
7.4	Coordination	26
8.	OWNER's RESPONSIBILITIES	26
8.1	Communications to Contractor	26
8.2	Replacement of ENGINEER	26
8.3	Furnish Data and Pay Promptly When Due	26
8.4	Lands and Easements; Reports and Tests	26
8.5	Insurance	26
8.6	Change Orders	26
8.7	Inspections, Tests and Approvals	26
8.8	Stop or Suspend Work; Terminate CONTRACTOR's Services	27
8.9	Limitations on OWNER's Responsibilities	27
8.10	Asbestos, PCBs, Petroleum, Hazardous Waste or Radioactive Material	27
8.11	Evidence of Financial Arrangements	27
9.	ENGINEER's STATUS DURING CONSTRUCTION	27
9.1	OWNER's Representative	27
9.2	Visits to Site	27
9.3	Project Representative	27
9.4	Clarifications and Interpretations	27
9.5	Authorized Variations In Work	27
9.6	Rejecting Defective Work	27
9.7-9.9	Shop Drawings; Change Orders and Payments	27
9.10	Determinations for Unit Prices	28
9.11-9.12	Decisions on Disputes; ENGINEER as Initial Interpreter	28
9.13	Limitations on ENGINEER'S Authority and Responsibilities	28
10.	CHANGES IN THE WORK	28
10.1	OWNER Ordered Change	28
10.2	Claim for Adjustment	29
10.3	Work Not Required by Contract Documents	29
10.4	Change Orders	29
10.5	Notification of Surety	29
11.	CHANGE OF CONTRACT PRICE	29
11.1-11.3	Contract Price; Claim for Adjustment; Value of the Work	29
11.4	Cost of the Work	29
11.5	Exclusions to Cost of the Work	30
11.6	CONTRACTOR's Fee	30
11.7	Cost Records	31
11.8	Cash Allowances	31
11.9	Unit Price Work	31
12.	CHANGE OF CONTRACT TIMES	31
12.1	Claim for Adjustment	31
12.2	Time of the Essence	31
12.3	Delays Beyond CONTRACTOR's Control	32
12.4	Delays Beyond OWNER's and CONTRACTOR's Control	32

Article or Paragraph Number & Title		*Page Number*
13. TESTS AND INSPECTIONS; CORRECTION, REMOVAL OR ACCEPTANCE OF DEFECTIVE WORK		32
13.1	Notice of Defects	32
13.2	Access to the Work	32
13.3	Tests and Inspections; Contractor's Cooperation	32
13.4	OWNER's Responsibilities; Independent Testing Laboratory	32
13.5	CONTRACTOR's Responsibilities	32
13.6-13.7	Covering Work Prior to Inspection, Testing or Approval	32
13.8-13.9	Uncovering Work at ENGINEER's Request	32
13.10	OWNER May Stop the Work	32
13.11	Correction or Removal of Defective Work	33
13.12	Correction Period	33
13.13	Acceptance of Defective Work	33
13.14	OWNER May Correct Defective Work	33
14. PAYMENTS TO CONTRACTOR AND COMPLETION		33
14.1	Schedule of Values	33
14.2	Application for Progress Payment	33
14.3	CONTRACTOR's Warranty of Title	34
14.4-14.7	Review of Applications for Progress Payments	34
14.8-14.9	Substantial Completion	34
14.10	Partial Utilization	35
14.11	Final Inspection	35
14.12	Final Application for Payment	35
14.13-14.14	Final Payment and Acceptance	35
14.15	Waiver of Claims	36
15. SUSPENSION OF WORK AND TERMINATION		36
15.1	OWNER May Suspend Work	36
15.2-15.4	OWNER May Terminate	36
15.5	CONTRACTOR May Stop Work or Terminate	36
16. DISPUTE RESOLUTION		37
17. MISCELLANEOUS		37
17.1	Giving Notice	37
17.2	Computation of Times	37
17.3	Notice of Claim	37
17.4	Cumulative Remedies	37
17.5	Professional Fees and Court Costs Included	37

INDEX TO GENERAL CONDITIONS

Article or Paragraph Number

Acceptance of-
Bonds and Insurance 5.14
defective Work 10.4.1, 13.13, 13.15
final payment 9.12, 14.15
insurance 5.14
other Work, by CONTRACTOR 7.3
Substitutes and "Or-Equal" Items 6.7.1
Work by OWNER 2.5, 6.30, 6.34
Access to the-
Lands, OWNER and CONTRACTOR responsibilities 4.1
site, related work 7.2
Work 13.2, 13.14, 14.9
Acts or Omissions-, Acts and Omissions-
CONTRACTOR 6.9.1, 9.13.3
ENGINEER 6.20, 9.13.3
OWNER 6.20, 8.9
Addenda-definition of (also see definition of Specifications) ..... (1.6, 1.10, 6.19) 1.1
Additional Property Insurance 5.7
Adjustments
Contract Price or Contract Times 1.5, 3.5, 4.1, 4.3.2, 4.5.2, 4.5.3, 9.4, 9.5, 10.2-10.4, 11, 12, 14.8, 15.1
progress schedule 6.6
Agreement-
definition of 1.2
All risk Insurance, policy form 5.6.2
Allowances, Cash 11.8
Amending Contract Documents 3.5
Amendment, Written-
in general 1.10, 1.45, 3.5, 5.10, 5.12, 6.6.2, 6.8.2, 6.19, 10.1, 10.4, 11.2, 12.1, 13.12.2, 14.7.2
Appeal, OWNER, or CONTRACTOR
intent to 9.10, 9.11, 10.4, 16.2, 16.5
Application for Payment-
definition of 1.3
ENGINEER's Responsibility 9.9
final payment 9.13.4, 9.13.5, 14.12-14.15
in general 2.8, 2.9, 5.6.4, 9.10, 15.5
progress payment 14.1, 14.7
review of 14.4-14.7
Asbestos-
claims pursuant thereto 4.5.2, 4.5.3
CONTRACTOR authorized to stop Work 4.5.2
definition of 1.4
OWNER responsibility for 4.5.1, 8.10
possible price and times change 4.5.2
Authorized Variations in Work 3.6, 6.25, 6.27, 9.5
Availability of Lands 4.1, 8.4
Award, Notice of--defined 1.25
Before Starting Construction 2.5-2.8
Bid--definition of 1.5 (1.1, 1.10, 2.3, 3.3, 4.2.6.4, 6.13, 11.4.3, 11.9.1)
Bidding Documents--definition of 1.6 (6.8.2)
Bidding Requirements--definitions of 1.7 (1.1, 4.2.6.2)
Bonds-
acceptance of 5.14
additional bonds 10.5,11.4.5.9
Cost of the Work 11.5.4
definition of 1.8
delivery of 2.1, 5.1
final application for payment 14.12-14.14
general 1.10, 5.1-5.3, 5.13, 9.13, 10.5, 14.7.6
performance, Payment and Other 5.1-5.2
Bonds and Insurance--in general 5
Builder's risk "all risk" policy form 5.6.2
Cancellation Provisions, Insurance 5.4.11, 5.8, 5.15
Cash Allowances 11.8
Certificate of Substantial Completion 1.38, 6.30, 2.3, 14.8, 14.10
Certificates of Inspection 9.13.4, 13.5, 14.12
Certificates of Insurance 2.7, 5.3, 5.4.11, 5.4.13, 5.6.5, 5.8, 5.14, 9.13.4, 14.12
Change in Contract Price--
Cash Allowances 11.8
claim for price adjustment 4.1, 4.2.6, 4.5, 5.15, 6.8.2, 9.4, 9.5, 9.11, 10.2, 10.5, 11.2, 13.9, 13.13, 13.14, 15.1, 15.5
CONTRACTOR's fee 11.6
Cost of the Work general 11.4-11.7
Exclusions to 11.5
Cost Records 11.7
in general 1.19, 1.44, 9.11, 10.4.2, 10.4.3, 11
Lump Sum Pricing 11.3.2
Notification of Surety 10.5
Scope of 10.3-10.4
Testing and Inspection, Uncovering the Work 13.9
Unit Price Work 11.9
Value of Work 11.3
Change in Contract Times-
Claim for times adjustment 4.1, 4.2.6, 4.5, 5.15, 6.8.2, 9.4, 9.5, 9.11, 10.2, 10.5, 12.1, 13.9, 13.13, 13.14, 14.7, 15.1, 15.5
Contractual time limits 12.2
Delays beyond CONTRACTOR's control 12.3
Delays beyond OWNER's and CONTRACTOR's control 12.4
Notification of surety 10.5
Scope of change 10.3-10.4
Change Orders-
Acceptance of Defective Work 13.13
Amending Contract Documents 3.5
Cash Allowances 11.8
Change of Contract Price 11
Change of Contract Times 12
Changes in the Work 10
CONTRACTOR's fee 11.6
Cost of the Work 11.4-11.7
Cost Records 11.7
definition of 1.9
emergencies 6.23
ENGINEER's responsibility 9.8, 10.4, 11.2, 12.1
execution of 10.4
Indemnification 6.12, 6.16, 6.31, 6.33
Insurance, Bonds and 5.10, 5.13, 10.5
OWNER may terminate 15.2-15.4
OWNER's Responsibility 8.6, 10.4
Physical Conditions-
Subsurface and, ... 4.2
Underground Facilities 4.3.2
Record Documents 6.19

Scope of Change 10.3-10.4
Substitutes 6.7.3-6.8.2
Unit Price Work 11.9
value of Work, covered by 11.3
Changes in the Work 10
Notification of surety 10.5
OWNER's and CONTRACTOR's responsibilities 10.4
Right to an adjustment 10.2
Scope of change 10.3-10.4
Claims-
against CONTRACTOR 6.16
against ENGINEER 6.32
against OWNER 6.32
Change of Contract Price 9.4, 11.2
Change of Contract Times 9.4, 12.1
CONTRACTOR's 4, 7.1, 9.4, 9.5, 9.11, 10.2 11.2, 11.9, 12.1, 14.8, 15.1, 15.5, 17.3
CONTRACTOR's Fee 11.6
CONTRACTOR's liability 5.4, 6.12, 6.16, 6.31
Cost of the Work 11.4, 11.5
Decisions on Disputes 9.11, 9.12
Dispute Resolution 16.1
Dispute Resolution Agreement 16.1-16.6
ENGINEER as initial interpreter 9.11
Lump Sum Pricing 11.3.2
Notice of 17.3
OWNER's 9.4, 9.5, 9.11, 10.2, 11.2, 11.9, 12.1, 13.9, 13.13, 13.14, 17.3
OWNER's liability 5.5
OWNER may refuse to make payment 14.7
Professional Fees and Court Costs Included 17.5
request for formal decision on 9.11
Substitute items 6.7.1.2
Time Extension 12.1
Time requirements 9.11, 12.1
Unit Price Work 11.9.3
Value of 11.3
Waiver of--on Final Payment 14.14, 14.15
Work Change Directive 10.2
written notice required 9.11, 11.2, 12.1
Clarifications and Interpretations 3.6.3, 9.4, 9.11
Clean Site 6.17
Codes of Technical Society, Organization or Association 3.3.3
Commencement of Contract Times 2.3
Communications-
general 6.2, 6.9.2, 8.1
Hazard Communication Programs 6.22
Completion-
Final Application for Payment 14.12
Final Inspection 14.11
Final Payment and Acceptance 14.13-14.14
Partial Utilization 14.10
Substantial Completion 1.38, 14.8-14.9
Waiver of Claims 14.15
Computation of Times 17.2.1-17.2.2
Concerning Subcontractors, Suppliers and Others 6.8-6.11
Conferences-
initially acceptable schedules 2.9
preconstruction 2.8
Conflict, Error, Ambiguity, Discrepancy-
CONTRACTOR to Report 2.5, 3.3.2
Construction, before starting by CONTRACTOR 2.5-2.7

Article or Paragraph Number

Construction Machinery, Equipment, etc. 6.4
Continuing the Work 6.29, 10.4
Contract Documents-
Amending 3.5
Bonds 5.1
Cash Allowances 11.8
Change of Contract Price 11
Change of Contract Times 12
Changes in the Work 10.4-10.5
check and verify 2.5
Clarifications and Interpretations 3.2, 3.6, 9.4, 9.11
definition of 1.10
ENGINEER as initial interpreter of 9.11
ENGINEER as OWNER's representative 9.1
general 3
Insurance 5.3
Intent 3.1-3.4
minor variations in the Work 3.6
OWNER's responsibility to furnish data 8.3
OWNER's responsibility to make prompt payment 8.3, 14.4, 14.13
precedence 3.1, 3.3.3
Record Documents 6.19
Reference to Standards and Specifications of Technical Societies 3.3
Related Work 7.2
Reporting and Resolving Discrepancies 2.5, 3.3
Reuse of 3.7
Supplementing 3.6
Termination of ENGINEER's Employment 8.2
Unit Price Work 11.9
variations 3.6, 6.23, 6.27
Visits to Site, ENGINEER's 9.2
Contract Price-
adjustment of 3.5, 4.1, 9.4 10.3 11.2-11.3
Change of 11
Decision on Disputes 9.11
definition of 1.11
Contract Times-
adjustment of 3.5, 4.1, 9.4, 10.3, 12
Change of 12.1-12.4
Commencement of 2.3
definition of 1.12
CONTRACTOR-
Acceptance of Insurance 5.14
Limited Reliance on Technical Data Authorized 4.2.2
Communications 6.2, 6.9.2
Continue Work 6.29, 10.4
coordination and scheduling 6.9.2
definition of 1.13
May Stop Work or Terminate 15.5
provide site access to others 7.2, 13.2
Safety and Protection 4.3.1.2, 6.16, 6.18, 6.21-6.23, 7.2, 13.2
Shop Drawing and Sample Review Prior to Submittal 6.25
Stop Work requirements 4.5.2
CONTRACTOR's-
Compensation 11.1-11.2
Continuing Obligation 14.15
Defective Work 9.6, 13.10-13.14
Duty to correct defective Work 13.11
Duty to Report-
Changes in the Work caused by

Emergency 6.23
Defects in Work of Others 7.3
Differing conditions 4.2.3
Discrepancy in Documents 2.5, 3.3.2,6.14.2
Underground Facilities not indicated 4.3.2
Emergencies 6.23
Equipment and Machinery Rental, Cost of the Work 11.4.5.3
Fee-Cost-Plus 11.4.5.6, 11.5.1, 11.6
General Warranty and Guarantee 6.30
Hazard Communication Programs 6.22
Indemnification 6.12, 6.16, 6.31-6.33
Inspection of the Work 7.3, 13.4
Labor, Materials and Equipment 6.3-6.5
Laws and Regulations, Compliance by 6.14.1
Liability Insurance 5.4
Notice of Intent to Appeal 9.10, 10.4
obligation to perform and complete the Work 6.30
Patent Fees and Royalties, paid for by 6.12
Performance and Other Bonds 5.1
Permits, obtained and paid for by 6.13
Progress Schedule 2.6, 2.8, 2.9 6.6, 6.29, 10.4, 15.2.1
Request for formal decision on disputes 9.11
Responsibilities-
Changes in the Work 10.1
Concerning Subcontractors, Suppliers and Others 6.8- 6.11
Continuing the Work 6.29, 10.4
CONTRACTOR's expense 6.7.1
CONTRACTOR's General Warranty and Guarantee 6.30
CONTRACTOR's review prior to Shop Drawing or Sample submittal 6.25
Coordination of Work 6.9.2
Emergencies 6.23
ENGINEER's evaluation, Substitutes or "Or-Equal" Items 6.7.3
For Acts and Omissions of Others 6.9.1-6.9.2,9.13
for deductible amounts, insurance 5.9
general 6, 7.2, 7.3, 8.9
Hazardous Communication Programs 6.22
Indemnification 6.31-6.33
Labor, Materials and Equipment 6.3-6.5
Laws and Regulations 6.14
Liability Insurance 5.4
Notice of variation from Contract Documents 6.27
Patent Fees and Royalties 6.12
Permits 6.13
Progress Schedule 6.6
Record Documents 6.19
related Work performed prior to ENGINEER's approval of required submittals 6.28
safe structural loading 6.18
Safety and Protection 6.20, 7.2, 13.2
Safety Representative 6.21
Scheduling the Work 6.9.2
Shop Drawings and Samples 6.24
Shop Drawings and Samples Review by ENGINEER 6.26
Site Cleanliness 6.17
Submittal Procedures 6.25
Substitute Construction Methods and Procedures 6.7.2

Article or Paragraph Number

Substitutes and "Or-Equal" Items 6.7.1
Superintendence 6.2
Supervision 6.1
Survival of Obligations 6.34
Taxes 6.15
Tests and Inspections 13.5
To Report 2.5
Use of Premises 6.16-6.18, 6.30.2.4
Review Prior to Shop Drawing or Sample Submittal 6.25
Right to adjustment for changes in the Work 10.2
right to claim 4, 7.1, 9.4, 9.5, 9.11, 10.2, 11.2, 11.9, 12.1, 13.9, 14.8, 15.1, 15.5, 17.3
Safety and Protection 6.20-6.22, 7.2, 13.2
Safety Representative 6.21
Shop Drawings and Samples Submittals 6.24-6.28
Special Consultants 11.4.4
Substitute Construction Methods and Procedures 6.7
Substitutes and "Or-Equal" Items, Expense 6.7.1, 6.7.2
Subcontractors, Suppliers and Others 6.8-6.11
Supervision and Superintendence 6.1, 6.2, 6.21
Taxes, Payment by 6.15
Use of Premises 6.16-6.18
Warranties and guarantees 6.30, 6.5
Warranty of Title 14.3
Written Notice Required-
CONTRACTOR stop Work or terminate 15.5
Reports of Differing Subsurface and Physical Conditions 4.2.3
Substantial Completion 14.8
CONTRACTORS--other 7
Contractual Liability Insurance 5.4.10
Contractual Time Limits 12.2
Coordination
CONTRACTOR's responsibility 6.9.2
Copies of Documents 2.2
Correction Period 13.12
Correction, Removal or Acceptance of Defective Work
in general 10.4.1, 13.10-13.14
Acceptance of Defective Work 13.13
Correction or Removal of Defective Work 6.30, 13.11
Correction Period 13.12
OWNER May Correct Defective Work 13.14
OWNER May Stop Work 13.10

Cost--
of Tests and Inspections 13.4
Records 11.7
Cost of the Work--
Bonds and insurance, additional 11.4.5.9
Cash Discounts 11.4.2
CONTRACTOR's Fee 11.6
Employee Expenses 11.4.5.1
Exclusions to11.5
General 11.4-11.5
Home office and overhead expenses 11.5
Losses and damages 11.4.5.6
Materials and equipment 11.4.2
Minor expenses 11.4.5.8
Payroll costs on changes 11.4.1
performed by Subcontractors 11.4.3
Records 11.7
Rentals of construction equipment and machinery 11.4.5.3

Royalty payments, permits and license fees 11.4.5.5
Site office and temporary facilities 11.4.5.2
Special Consultants, CONTRACTOR's 11.4.4
Supplemental 11.4.5
Taxes related to the Work..... 11.4.5.4
Tests and Inspection..... 13.4
Trade Discounts..... 11.4.2
Utilities, fuel and sanitary facilities 11.4.5.7
Work after regular hours..... 11.4.1
Covering Work 13.6-13.7
Cumulative Remedies 17.4-17.5
Cutting, fitting and patching..... 7.2
Data, to be furnished by OWNER 8.3
Day--definition of 17.2.2
Decisions on Disputes..... 9.11, 9.12
defective --definition of 1.14
defective Work--
Acceptance of 10.4.1, 13.13
Correction or Removal of 10.4.1, 13.11
Correction Period..... 13.12
in general 13, 14.7, 14.11
Observation by ENGINEER 9.2
OWNER May Stop Work 13.10
Prompt Notice of Defects 13.1
Rejecting..... 9.6
Uncovering the Work 13.8
Definitions..... 1
Delays 4.1, 6.29, 12.3-12.4
Delivery of Bonds 2.1
Delivery of certificate of insurance 2.7
Determinations for Unit Prices..... 9.10
Differing Subsurface or .....Physical Conditions
Notice of..... 4.2.3
ENGINEER's Review..... 4.2.4
Possible Contract Documents Change..... 4.2.5
Possible Price and Times Adjustments 4.2.6
Discrepancies-Reporting and Resolving 2.5, 3.3.2, 6.14.2
Dispute Resolution--
Agreement 16.1-16.6
Arbitration 16.1-16.5
general..... 16
Mediation 16.6
Dispute Resolution Agreement..... 16.1-16.6
Disputes, Decisions by ENGINEER 9.11-9.12
Documents--
Copies of 2.2
Record 6.19
Reuse of 3.7
Drawings--definition of..... 1.15
Easements 4.1
Effective date of Agreement--definition of 1.16
Emergencies 6.23
ENGINEER--
as initial interpreter on disputes..... 9.11-9.12
definition of 1.17
Limitations on authority and
responsibilities 9.13
Replacement of..... 8.2
Resident Project Representative 9.3
ENGINEER's Consultant--definition of 1.18
ENGINEER's--
authority and responsibility, limitations on 9.13
Authorized Variations in the Work 9.5
Change Orders, responsibility for 9.7, 10, 11, 12

Article or Paragraph Number

Clarifications and Interpretations 3.6.3, 9.4
Decisions on disputes..... 9.11-9.12
defective Work, notice of 13.1
Evaluation of Substitute Items 6.7.3
Liability..... 6.32, 9.12
Notice Work is Acceptable..... 14.13
Observations6.30.2, 9.2
OWNER's Representative 9.1
Payments to the CONTRACTOR,
Responsibility for 9.9, 14
Recommendation of Payment 14.4, 14.13
Responsibilities--
Limitations on..... 9.11-9.13
Review of Reports on Differing Subsurface
and Physical Conditions 4.2.4
Shop Drawings and Samples, review
responsibility..... 6.26
Status During Construction--
authorized variations in the Work 9.5
Clarifications and Interpretations 9.4
Decisions on Disputes 9.11-9.12
Determinations on Unit Price 9.10
ENGINEER as Initial Interpreter 9.11-9.12
ENGINEER's Responsibilities..... 9.1-9.12
Limitations on ENGINER'S Authority and
Responsibilities 9.13
OWNER's Representative 9.1
Project Representative 9.3
Rejecting Defective Work 9.6
Shop Drawings, Change Orders and
Payments 9.7-9.9
Visits to Site 9.2
Unit Price Determinations 9.10
Visits to Site 9.2
Written consent required 7.2, 9.1
Equipment, Labor, Materials and 6.3-6.5
Equipment rental, Cost of the Work 11.4.5.3
Equivalent Materials and Equipment..... 6.7
Errors or omissions 6.33
Evidence of Financial Arrangements..... 8.11
Explorations of physical conditions 4.2.1
Fee, CONTRACTOR's-Costs-Plus 11.6
Field Order-
definition of 1.19
issued by ENGINEER 3.6.1, 9.5
Final Application for Payment..... 14.12
Final Inspection 14.11
Final Payment-
and Acceptance..... 14.13-14.14
Prior to, for cash allowances..... 11,8
General Provisions 17.3-17.4
General Requirements-
definition of..... 1.20
principal references to 2.6, 6.4, 6.6-6.7. 6.24
Giving Notice 17.1
Guarantee of Work-by
CONTRACTOR 6.30, 14.12
Hazard Communication Programs 6.22
Hazardous Waste-
definition of..... 1.21
general 4.5
Owner's responsibility for 8.10
Indemnification 6.12, 6.16, 6.31-6.33
Initially Acceptable Schedules..... 2.9

Article or Paragraph Number

Inspection-
Certificates of 9.13.4, 13.5, 14.12
Final 14.11
Special, required by ENGINEER 9.6
Tests and Approval 8.7, 13.3-13.4
Insurance-
Acceptance of, by OWNER 5.14
Additional, required by changes in the Work 11.4.5.9
Before starting the Work 2.7
Bonds and-in general 5
Cancellation Provisions 5.8
Certificates of 2.7, 5, 5.3, 5.4.11, 5.4.13, 5.6.5, 5.8, 5.14, 9.13.4, 14.12
completed operations 5.4.13
CONTRACTOR's Liability 5.4
CONTRACTOR's objection to coverage 5.14
Contractual Liability 5.4.10
deductible amounts, CONTRACTOR's responsibility 5.9
Final Application for Payment 14.12
Licensed Insurers 5.3
Notice requirements, material changes 5.8, 10.50
Option to Replace 5.14
other special insurances 5.10
OWNER as fiduciary for insureds 5.12-5.13
OWNER's Liability 5.5
OWNER's Responsibility 8.5
Partial Utilization, Property Insurance 5.15
Property 5.6-5.10
Receipt and Application of Insurance Proceeds 5.12-5.13
Special Insurance 5.10
Waiver of Rights 5.11
Intent of Contract Documents 3.1-3.4
Interpretations and Clarifications 3.6.3, 9.4
Investigations of physical conditions 4.2
Labor, Materials and Equipment 6.3-6.5
Lands-
and Easements 8.4
Availability of 4.1, 8.4
Reports & Tests 8.4
Laws and Regulations-Laws or Regulations-
Bonds 5.1-5.2
Changes in the Work 10.4
Contract Documents 3.1
CONTRACTOR's Responsibilities 6.14
Correction Period, defective Work 13.12
Cost of the Work, taxes 11.4.5.4
definition of 1.22
general 6.14
Indemnification 6.31-6.33
Insurance 5.3
Precedence 3.1,3.3.3
Reference to 3.3.1
Safety and Protection 6.20, 13.2
Subcontractors, Suppliers and Others 6.8-6.11
Tests and Inspections 13.5
Use of Premises 6.16
Visits to Site 9.2
Liability Insurance-
CONTRACTOR's 5.4
OWNER's 5.5
Licensed Sureties and Insurers 5.3

Article or Paragraph Number

Liens-
Application for Progress Payment 14.2
Contractor's Warranty of Title 14.3
Final Application for Payment 14.12
definition of 1.23
Waiver of Claims 14.15
Limitations on ENGINEER's authority and responsibilities 9.13
Limited Reliance by CONTRACTOR Authorized 4.2.2
Maintenance and Operating Manuals-
Final Application for Payment 14.12
Manuals (of others)-
Precedence 3.3.3.1
Reference to in Contract Documents 3.3.1
Materials and equipment-
furnished by CONTRACTOR 6.3
not incorporated in Work 14.2
Materials or equipment-equivalent 6.7
Mediation (Optional) 16.7
Milestones-definition of 1.24
Miscellaneous-
Computation of Times 17.2
Cumulative Remedies 17.4
Giving Notice 17.1
Notice of Claim 17.3
Professional Fees and Court Costs Included 17.5
Multi-prime contracts 7
Not Shown or Indicated 4.3.2
Notice of-
Acceptability of Project 14.13
Award, definition of 1.25
Claim 17.3
Defects, ... 13.1
Differing Subsurface or Physical Conditions 4.2.3
Giving 17.1
Tests and Inspections 13.3
Variation, Shop Drawing and Sample 6.27
Notice to Proceed-
definition of 1.26
giving of 2.3
Notification to Surety 10.5
Observations, by ENGINEER 6.30, 9.2
Occupancy of the Work 5.15, 6.30.2.4, 14.10
Omissions or acts by CONTRACTOR 6.9, 9.13
"Open peril" policy form, Insurance 5.6.2
Option to Replace 5.14
"Or Equal" Items 6.7
Other work 7
Overtime Work-prohibition of 6.3
OWNER-
Acceptance of defective Work 13.13
appoint an ENGINEER 8.2
as fiduciary 5.12-5.13
Availability of Lands, responsibility 4.1
definition of 1.27
data, furnish 8.3
May Correct Defective Work 13.14
May refuse to make payment 14.7
May Stop the Work 13.10
may suspend work, terminate 8.8, 13.10, 15.1-15.4
Payment, make prompt 8.3, 14.4, 14.13
performance of other Work 7.1
permits and licenses, requirements 6.13

purchased insurance requirements 5.6-5.10
OWNER's-
Acceptance of the Work 6.30.2.5
Change Orders, obligation to
execute 8.6, 10.4
Communications 8.1
Coordination of the Work 7.4
Disputes, request for decision 9.11
Inspections, tests and approvals 8.7, 13.4
Liability Insurance 5.5
Notice of Defects 13.1
Representative-During Construction,
ENGINEER's Status 9.1
Responsibilities-
Asbestos, PCB's, Petroleum, Hazardous
Waste on Radioactive Material 8.10
Change Orders 8.6
Changes in the Work 10.1
communications 8.1
CONTRACTOR's responsibilities 8.9
evidence of financial arrangements 8.11
inspections, tests and approvals 8.7
Insurance 8.5
lands and easements 8.4
prompt payment by 8.3
replacement of ENGINEER 8.2
reports and tests 8.4
stop or suspend Work 8.8, 13.10, 15.1
terminate CONTRACTOR's services 8.8, 15.2
separate representative at site 9.3
independent testing 13.4
use or occupancy of the
Work 5.15, 14.10
written consent or approval
required 9.1,6.3,11.4
written notice
required 7.1, 9.4, 9.11, 11.2, 11.9, 14.7, 15.4
PCBs-
definition of 1.29
general 4.5
OWNER's responsibility for 8.10
Partial Utilization-
definition of 1.28
general 6.30.2.4, 14.10
Property Insurance 5.15
Patent Fees and Royalties 6.12
Payment Bonds 5.1-5.2
Payments, Recommendation of 14.4-14.7, 14.13
Payments to CONTRACTOR and Completion-
Application for Progress Payments 14.2
CONTRACTOR's Warranty of Title 14.3
Final Application for Payment 14.12
Final Inspection 14.11
Final Payment and Acceptance 14.13-14.14
general 8.3, 14
Partial Utilization 14.10
Retainage 14.2
Review of Applications for Progress
Payments 14.4-14.7
prompt payment 8.3
Schedule of Values 14.1
Substantial Completion 14.8-14.9
Waiver of Claims 14.15
when payments due 14.4, 14.13

Article or Paragraph Number

withholding payment 14.7
Performance Bonds 5.1-5.2
Permits 6.13
Petroleum-
definition of 1.30
general 4.5
OWNER's responsibility for 8.10
Physical Conditions-
Drawings of, in or relating to 4.2.1.2
ENGINEER's review 4.2.4
existing structures 4.2.2
general 4.2.1.2
Subsurface and, ... 4.2
Subsurface Conditions 4.2.1.1
Underground Facilities 4.3
Possible Contract Documents Change 4.2.5
Possible Price and Times Adjustments 4.2.6
Reports and Drawings 4.2.1
Notice of Differing Subsurface or, ... 4.2.3
Subsurface and 4.2
Subsurface Conditions 4.2.1.1
Technical Data, Limited Reliance by
CONTRACTOR Authorized 4.2.2
Underground Facilities-
general 4.3
Not Shown or Indicated 4.3.2
Protection of 4.3, 6.20
Shown or Indicated 4.3.1
Technical Data 4.2.2
Preconstruction Conference 2.8
Preliminary Matters 2
Preliminary Schedules 2.6
Premises, Use of 6.16-6.18
Price, Change of Contract 11
Price, Contract-definition of 1.11
Progress Payment, Applications for 14.2
Progress payment-retainage 14.2
Progress schedule, CONTRACTOR's 2.6, 2.8, 2.9,
6.6, 6.29, 10.4, 15.2.1
Project-definition of 1.31
Project Representative-
ENGINEER's Status During Construction 9.3
Project Representative, Resident
-definition of 1.33
prompt payment by OWNER 8.3
Property Insurance
Additional 5.7
general5.6-5.10
Partial Utilization 5.15, 14.10.2
receipt and application of
proceeds 5.12-5.13
Protection, Safety and 6.20-6.21,13.2
Punch list 14.11
Radioactive Material-
definition 1.32
general4.5
OWNER's responsibility for 8.10
Recommendation of Payment 14.4, 14.5, 14.13
Record Documents 6.19, 14.12
Records, procedures for maintaining 2.8
Reference Points 4.4
Reference to Standards and Specifications
of Technical Societies 3.3
Regulations, laws and (or) 6.14

Article or Paragraph Number

Rejecting Defective Work 9.6
Related Work-
at Site 7.1-7.3
Performed prior to Shop Drawings and Samples submittals review 6.28
Remedies, cumulative 17.4, 17.5
Removal or Correction of Defective Work 13.11
rental agreements, OWNER approval required 11.4.5.3
replacement of ENGINEER, by OWNER 8.2
Reporting and Resolving Discrepancies 2.5, 3.3.2, 6.14.2
Reports-
and Drawings 4.2.1
and Tests, OWNER's responsibility 8.4
Resident Project Representative-
definition of 1.33
provision for 9.3
Resident Superintendent, CONTRACTOR's 6.2
Responsibilities-
CONTRACTOR's-in general 6
ENGINEER's-in general 9
Limitations on 9.13
OWNER's-in general 8
Retainage 14.2
Reuse of Documents 3.7
Review by CONTRACTOR: Shop Drawings and Samples Prior to Submittal 6.25
Review of applications for Progress Payments 14.4-14.7
Right to an adjustment 10.2
Rights of Way 4.1
Royalties, Patent Fees and 6.12
Safe Structural Loading 6.18
Safety-
and Protection 4.3.2, 6.16, 6.18, 6.20-6.21, 7.2,13.2
general 6.20-6.23
Representative, CONTRACTOR's 6.21
Samples-
definition of 1.34
general 6.24-6.28
Review by CONTRACTOR 6.25
Review by ENGINEER 6.26, 6.27
related Work 6.28
submittal of 6.24.2
submittal procedures 6.25
Schedule of progress 2.6, 2.8-2.9, 6.6, 6.29, 10.4, 15.2.1
Schedule of Shop Drawing and Sample Submittals 2.6, 2.8-2.9, 6.24-6.28
Schedule of Values 2.6, 2.8-2.9, 14.1
Schedules-
Adherence to 15.2.1
Adjusting 6.6
Change of Contract Times 10.4
Initially Acceptable 2.8-2.9
Preliminary 2.6
Scope of Changes 10.3-10.4
Subsurface Conditions 4.2.1.1
Shop Drawings--
and Samples, general 6.24-6.28
Change Orders & Applications for Payments, and 9.7-9.9

Article or Paragraph Number

definition of 1.35
ENGINEER ..... 's approval of 3.6.2
ENGINEER's responsibility for review 9.7, 6.24-6.28
related Work 6.28
review procedures 2.8, 6.24-6.28
submittal required 6.24.1
Submittal Procedures 6.25
use to approve substitutions 6.7.3
Shown or Indicated 4.3.1
Site Access 7.2, 13.2
Site Cleanliness 6.17
Site, Visits to--
by ENGINEER 9.2, 13.2
by others 13.2
"Special causes of loss" policy form, insurance 5.6.2
Specifications--
definition of 1.36
of Technical Societies, reference to 3.3.1
precedence 3.3.3
Standards and Specifications of Technical Societies 3.3
Starting Construction, Before 2.5-2.8
Starting the Work 2.4
Stop or Suspend Work--
by CONTRACTOR 15.5
by OWNER 8.8, 13.10,15.1
Storage of materials and equipment 4.1, 7.2
Structural Loading, Safety 6.18
Subcontractor--
Concerning 6.8-6.11
definition of 1.37
delays 12.3
waiver of rights 6.11
Subcontractors--in general 6.8-6.11
Subcontract--required provisions 5.11, 6.11, 11.4.3
Submittals--
Applications for Payment 14.2
Maintenance and Operation Manuals 14.12
Procedures 6.25
Progress Schedules 2.6, 2.9
Samples 6.24-6.28
Schedule of Values 2.6, 14.1
Schedule of Shop Drawings and Samples Submissions 2.6, 2.8-2.9
Shop Drawings 6.24-6.28
Substantial Completion--
Certification of 6.30.2.3, 14.8-14.9
definition of 1.38
Substitute Construction Methods or Procedures 6.7.2
Substitutes and "Or Equal" Items 6.7
CONTRACTOR's EXPENSE 6.7.1.3
ENGINEER's Evaluation 6.7.3
"Or-Equal" 6.7.1
Substitute Construction Methods of Procedures 6.7.2
Substitute Items 6.7.1.2
Subsurface and Physical Conditions--
Drawings of, in or relating to 4.2.1.2
ENGINEER's Review 4.2.4
general 4.2
Limited Reliance by CONTRACTOR Authorized 4.2.2
Notice of Differing Subsurface or Physical Conditions 4.2.3
Physical Conditions 4.2.1.2
Possible Contract Documents Change 4.2.5

Article or Paragraph Number

Possible Price and Times Adjustments 4.2.6
Reports and Drawings 4.2.1
Subsurface and 4.2
Subsurface Conditions at the Site 4.2.1.1
Technical Data 4.2.2
Supervision-
CONTRACTOR's responsibility 6.1
OWNER shall not supervise 8.9
ENGINEER shall not supervise 9.2, 9.13.2
Superintendence 6.2
Superintendent, CONTRACTOR's resident 6.2
Supplemental costs 11.4.5
Supplementary Conditions-
definition of 1.39
principal reference to 1.10, 1.18, 2.2, 2.7, 4.2, 4.3, 5.1, 5.3, 5.4, 5.6-5.9, 5.11, 6.8, 6.13, 7.4, 8.11, 9.3, 9.10
Supplementing Contract Documents 3.6
Supplier-
definition of 1.40
principal references to 3.7, 6.5, 6.8-6.11, 6.20, 6.24, 9.13, 14.12
Waiver of Rights 6.11
Surety-
consent to final payment 14.12, 14.14
ENGINEER has no duty to 9.13
Notification of 10.1, 10.5, 15.2
qualification of 5.1-5.3
Survival of Obligations 6.34
Suspend Work, OWNER May 13.10, 15.1
Suspension of Work and Termination- 15
CONTRACTOR May Stop Work or Terminate 15.5
OWNER May Suspend Work 15.1
OWNER May Terminate 15.2-15.4
Taxes-Payment by CONTRACTOR 6.15
Technical Data-
Limited Reliance by CONTRACTOR 4.2.2
Possible Price and Times Adjustments 4.2.6
Reports of Differing Subsurface and Physical Conditions 4.2.3
Temporary construction facilities 4.1
Termination-
by CONTRACTOR 15.5
By OWNER 8.8, 15.1-15.4
of ENGINEER's employment 8.2
Suspension of Work-in general 15
Terms and Adjectives 3.4
Tests and Inspections-
Access to the Work, by others 13.2
CONTRACTOR's responsibilities 13.5
cost of 13.4
covering Work prior to 13.6-13.7
Laws and Regulations (or) 13.5
Notice of Defects 13.1
OWNER May Stop Work 13.10
OWNER's independent testing 13.4
special, required by ENGINEER 9.6
timely notice required 13.4
Uncovering the Work, at ENGINEER's request 13.8-13.9
Times-
Adjusting 6.6
Change of Contract 12
Adjusting 6.6

Article or Paragraph Number

Computation of 17.2
Contract Times-definition of 1.12
day 17.72
Milestones 12
Requirements-
appeals 16
clarifications, claims and disputes 9.11, 11.2, 12
commencement of contract times 2.3
preconstruction conference 2.8
schedules 2.6, 2.9, 6.6
starting the Work 2.4
Title, Warranty of 14.3
Uncovering Work 13.8-13.9
Underground Facilities, Physical Conditions-
definition of 1.41
Not Shown or Indicated 4.3.2
protection of 4.3, 6.20
Shown or Indicated 4.3.1
Unit Price Work-
claims 11.9.3
definition of 1.42
general 11.9, 14.1, 14.5
Unit Prices-
general 11.3.1
Determination for 9.10
Use of Premises 6.16, 6.18, 6.30.2.4
Utility owners 6.13, 6.20, 7.1-7.3, 13.2
Utilization, Partial 1.28, 5.15, 6.30, 2.4, 14.10
Value of the Work 11.3
Values, Schedule of 2.6, 2.8-2.9, 14.1
Variations in Work-Minor Authorized 6.25, 6.27, 9.5
Visits of Site-by ENGINEER 9.2
Waiver of Claims-on Final Payment 14.15
Waiver of Rights by insured parties 5.11, 6.11
Warranty and Guarantee, General-by CONTRACTOR 6.30
Warranty of Title, CONTRACTOR's 14.3
Work-
Access to 13.2
by others, ... 7
Changes in the 10
Continuing the, ... 6.29

CONTRACTOR May Stop Work or Terminate 15.5
Coordination of 7.4
Cost of the 11.4-11.5
definition of 1.43
neglected by CONTRACTOR 13.14
other Work 7
OWNER May Stop Work 13.10
OWNER May Suspend Work 13.10, 15.1
Related, Work at Site 7.1-7.3
Starting the 2.4
Stopping by CONTRACTOR 15.5
Stopping by OWNER 15.1-15.4
Variation and deviation authorized, minor 3.6
Work Change Directive-
claims pursuant to 10.2
definition of 1.44
principal references to 3.5.3, 10.1-10.2
Written Amendment-
definition of 1.45

Article or Paragraph Number

principal references to 1.10, 3.5, 5.10, 5.12, 6.6.2, 6.8.2, 6.19, 10.1, 10.4, 11.2, 12.1, 13.12.2, 14.7.2
Written Clarifications and Interpretations 3.6.3, 9.4, 9.11

Article or Paragraph Number

Written Notice Required-
by CONTRACTOR 7.1, 9.10-9.11, 10.4, 11.2, 12.1
by OWNER 9.10-9.11, 10.4, 11.2, 13.14

GENERAL CONDITIONS

ARTICLE 1 - DEFINITIONS

Wherever used in these General Conditions or in the other Contract documents the following terms have the meanings indicated which are applicable to both the singular and plural thereof:

1.1. *Addenda* - Written or graphic instruments issued prior to the opening of Bids which clarify, correct or change the Bidding Requirements or the Contract Documents.

1.2. *Agreement* - The written contract between OWNER and CONTRACTOR covering the Work to be performed; other Contract Documents are attached to the Agreement and made a part thereof as provided therein.

1.3. *Application for Payment* - The form accepted by ENGINEER which is to be used by CONTRACTOR in requesting progress or final payments and which is to be accompanied by such supporting documentation as is required by the Contract Documents.

1.4. *Asbestos* - Any material that contains more than one percent asbestos and is friable or is releasing asbestos fibers into the air above current action levels established by the United States Occupational Safety and Health Administration.

1.5. *Bid* - The offer or proposal of the bidder submitted on the prescribed form setting forth the prices for the Work to be performed.

1.6. *Bidding Documents* - The advertisement or invitation to Bid, instructions to bidders, the Bid form, and the proposed Contract Documents (including all Addenda issued prior to receipt of Bids).

1.7. *Bidding Requirements* - The advertisement or invitation to Bid, instructions to bidders, and the Bid form.

1.8. *Bonds* - Performance and Payment bonds and other instruments of security.

1.9. *Change Order* - A document recommended by ENGINEER, which is signed by CONTRACTOR and OWNER and authorizes an addition, deletion or revision in the Work, or an adjustment in the Contract Price or the Contract Times, issued on or after the Effective Date of the Agreement.

1.10. *Contract Documents* - The Agreement, Addenda (which pertain to the Contract Documents), CONTRACTOR's Bid (including documentation accompanying the Bid and any post Bid documentation submitted prior to the Notice of Award) when attached as an exhibit to the Agreement, the Notice to Proceed, the Bonds, these General Conditions, the Supplementary Conditions, the Specifications and the Drawings as the same are more specifically identified in the Agreement, together with all Written Amendments, Change Orders, Work Change Directives, Field Orders and ENGINEER's written interpretations and clarifications issued pursuant to paragraphs 3.5, 3.6.1, and 3.6.3 on or after the Effective Date of the Agreement. Shop Drawing submittals approved pursuant to paragraphs 6.26 and 6.27 and the reports and drawings referred to in paragraphs 4.2.1.1 and 4.2.2.2 are not Contract Documents.

1.11. *Contract Price* - The moneys payable by OWNER to CONTRACTOR for completion of the Work in accordance with the Contract Documents as stated in the Agreement (subject to the provisions of paragraph 11.9.1 in the case of Unit Price work).

1.12. *Contract Times* - The numbers of days or the dates stated in the Agreement: (i) to achieve Substantial Completion, and (ii) to complete the Work so that it is ready for final payment as evidenced by ENGINEER's written recommendation of final payment in accordance with paragraph 14.13.

1.13. *CONTRACTOR* - The person, firm or corporation with whom OWNER has entered into the Agreement.

1.14. D*efective* - An adjective which when modifying the word Work refers to Work that is unsatisfactory, faulty or deficient, in that it does not conform to the Contract Documents, or does not meet the requirements of any inspection, reference standard, test or approval referred to in the Contract Documents, or has been damaged prior to ENGINEER's recommendation of final payment (unless responsibility for the protection thereof has been assumed by OWNER at Substantial Completion in accordance with paragraph 14.8 or 14.10).

1.15. *Drawings* - The drawings which show the scope, extent and character of the Work to be furnished and performed by CONTRACTOR and which have been prepared or approved by ENGINEER and are referred to in the Contract Documents. Shop drawings are not Drawings as so defined.

1.16. *Effective Date of the Agreement* - The date indicated in the Agreement on which becomes effective, but if no such date is indicated it means the date on which the Agreement is signed and delivered by the last of the two parties to sign and deliver.

1.17. *ENGINEER* - The person, firm or corporation named as such in the Agreement.

1.18. *ENGINEER's Consultant* - A person, firm or corporation having a contract with ENGINEER to furnish services as ENGINEER's independent professional associate or consultant with respect to the Project and who is identified as such in the Supplementary Conditions.

1.19. *Field Order* - A written order issued by ENGINEER which orders minor changes in the Work in accordance with paragraph 9.5 but which does not involve a change in the Contract Price or the Contract Times.

1.20. *General Requirements* - Sections of Division 1 of the Specifications.

1.21. *Hazardous Waste* - The term Hazardous Waste shall have the meaning provided in Section 1004 of the Solid Waste Disposal Act (42 USC Section 6903) as amended from time to time.

1.22. *Laws and Regulations; Laws or Regulations* - Any and all applicable laws, rules, regulations, ordinances, codes and orders of any and all governmental bodies, agencies, authorities and courts having jurisdiction.

1.23. *Liens* - Liens, charges, security interests or encumbrances upon real property or personal property.

1.24. *Milestone* - A principal event specified in the Contract Documents relating to an intermediate completion date or time prior to Substantial Completion of all the Work.

1.25. *Notice of Award* - The written notice by OWNER to the apparent successful bidder stating that upon compliance by the apparent successful bidder with the conditions precedent enumerated therein, within the time specified, OWNER will sign and deliver the Agreement.

1.26. *Notice to Proceed* - A written notice given by OWNER to CONTRACTOR (with a copy to ENGINEER) fixing the date on which the Contract Times will commence to run and on which CONTRACTOR shall start to perform CONTRACTOR's obligations under the Contract Documents.

1.27. *OWNER* - The public body or authority, corporation, association, firm or person with whom CONTRACTOR has entered into the Agreement and for whom the Work is to be provided.

1.28. *Partial Utilization* - Use by OWNER of a substantially completed part of the Work for the purpose for which it is intended (or a related purpose) prior to Substantial Completion of all the Work.

1.29. *PCBs* - Polychlorinated biphenyl's.

1.30. *Petroleum* - Petroleum, including crude oil or any fraction thereof which is liquid at standard conditions of temperature and pressure (60 degrees Fahrenheit and 14.7 pounds per square inch absolute), such as oil, petroleum, fuel oil, oil sludge, oil refuse, gasoline, kerosene, and oil mixed with other non-Hazardous Wastes and crude oils.

1.31. *Project* - The total construction of which the Work to be provided under the Contract Documents may be the whole, or a part as indicated elsewhere in the Contract Documents.

1.32. *Radioactive Material* - Source, special nuclear, or byproduct material as defined by the Atomic Energy Act of 1954 (42 USC Section 2011 et seq.) as amended from time to time.

1.33. *Resident Project Representative* - The authorized representative of ENGINEER who may be assigned to the site or any part thereof.

1.34. *Samples* - Physical examples of materials, equipment, or workmanship that are representative of some portion of the Work and which establish the standards by which such portion of the Work will be judged.

1.35. *Shop Drawings* - All drawings, diagrams, illustrations, schedules and other data or information which are specifically prepared or assembled by or for CONTRACTOR and submitted by CONTRACTOR to illustrate some portion of the Work.

1.36. *Specifications* - Those portions of the Contract Documents consisting of written technical descriptions of materials, equipment, construction systems, standards and workmanship as applied to the Work and certain administrative details applicable thereto.

1.37. *Subcontractor* - An individual, firm or corporation having a direct contract with CONTRACTOR or with any other Subcontractor for the performance of a part of the Work at the site.

1.38. *Substantial Completion* - The Work (or a specified part thereof) has progressed to the point where, in the opinion of ENGINEER as evidenced by ENGINEER's definitive certificate of Substantial Completion, it is sufficiently complete, in accordance with the Contract Documents, so that the Work (or specified part) can be utilized for the purposes for which it is intended; or if no such certificate is issued, when the Work is complete and ready for final payment as evidenced by ENGINEER's written recommendation of final payment in accordance with paragraph 14.13. The terms "substantially complete" and "substantially completed" as applied to all or part of the Work refer to Substantial Completion thereof.

1.39. *Supplementary Conditions* - The part of the Contract Documents which amends or supplements these General Conditions.

1.40. *Supplier* - A manufacturer, fabricator, supplier, distributor, materialmen or vendor having a direct contract with CONTRACTOR or with any Subcontractor to furnish materials or equipment to be incorporated in the Work by CONTRACTOR or any Subcontractor.

1.41. *Underground Facilities* - All pipelines, conduits, ducts, cables, wires, manholes, vaults, tanks, tunnels or other such facilities or attachments, and any encasements containing such facilities which have been installed underground to furnish any of the following services or materials: electricity, gases, steam, liquid petroleum products, telephone or other communications, cable television, sewage and drainage removal, traffic or other control systems or water.

1.42. *Unit Price Work* - Work to be paid for on the basis of unit prices.

1.43. *Work* - The entire completed construction or the various separately identifiable parts thereof required to be furnished under the Contract Documents. Work includes and is the result of performing or furnishing labor and furnishing and incorporating materials and equipment into the construction, and performing or furnishing services and furnishing documents, all as required by the Contract Documents.

1.44. *Work Change Directive* - A written directive to CONTRACTOR, issued on or after the Effective Date of the Agreement and signed by OWNER and recommended by ENGINEER, ordering an addition, deletion or revision in the Work, or responding to differing or unforeseen physical conditions under which the Work is to be performed as provided in paragraph 4.2 or 4.3 or to emergencies under paragraph 6.23. A Work Change Directive will not change the Contract Price or the Contract Times, but is evidence that the parties expect that the change directed or documented by a Work Change Directive will be incorporated in a subsequently issued Change Order following negotiations by the parties as to its effect, if any, on the Contract Price or Contract Times as provided in paragraph 10.2.

1.45. *Written Amendment* - A written amendment of the Contract Documents, signed by OWNER and CONTRACTOR on or after the Effective Date of the Agreement and normally dealing with the nonengineering or nontechnical rather than strictly construction-related aspects of the Contract Documents.

ARTICLE 2 - PRELIMINARY MATTERS

Delivery of Bonds:

2.1. When CONTRACTOR delivers the executed Agreements to OWNER, CONTRACTOR shall also deliver to OWNER such Bonds as CONTRACTOR may be required to furnish in accordance with paragraph 5.1.

Copies of Document:

2.2. OWNER shall furnish to CONTRACTOR up to ten copies (unless otherwise specified in the Supplementary Conditions) of the Contract Documents as are reasonable necessary for the execution of the Work. Additional copies will be furnished, upon request, at the cost of reproduction.

Commencement of Contract Times; Notice to Proceed:

2.3. The Contract Times will commence to run on the thirtieth day after the Effective Date of the Agreement, or, if a Notice to Proceed is given, on the day indicated in the Notice to Proceed. A Notice to Proceed may be given at any time within thirty days after the Effective Date of the Agreement. ~~In no event will the Contract Times commence to run later than the sixtieth day after the day of Bid opening or the thirtieth day after the Effective Date of the Agreement, whichever date is earlier.~~

SEE SUPPLEMENTARY CONDITIONS

Starting the Work:

2.4. CONTRACTOR shall start to perform the Work on the date when the Contract Times commence to run, but no Work shall be done at the site prior to the date on which the Contract Times commence to run.

Before Starting Construction:

2.5. Before undertaking each part of the Work, CONTRACTOR shall carefully study and compare the Contract Documents and check and verify pertinent figures shown thereon and all applicable field measurements. CONTRACTOR shall promptly report in writing to

ENGINEER any conflict, error, ambiguity or discrepancy which CONTRACTOR may discover and shall obtain a written interpretation or clarification from ENGINEER before proceeding with any Work affected thereby; however, CONTRACTOR shall not be liable to OWNER or ENGINEER for failure to report any conflict, error, ambiguity or discrepancy in the Contract Documents, unless CONTRACTOR knew or reasonably should have know thereof.

2.6. Within ten days after the Effective Date of the Agreement (unless otherwise specified in the General Requirements), CONTRACTOR shall submit to ENGINEER for review:

2.6.1. a preliminary progress schedule indicating the time (number of days or dates) for starting and completing the various stages of the Work, including any Milestones specified in the Contract Documents;

2.6.2 a preliminary schedule of Shop Drawing and Sample submittals which will list each required submittal and the times for submitting, reviewing and processing such submittal;

2.6.3. a preliminary schedule of values for all of the Work which will include quantities and prices of items aggregating the Contract Price and will subdivide the Work into component parts in sufficient detail to serve as the basis for progress payments during construction. Such prices will include an appropriate amount of overhead and profit applicable to each item of Work.

2.7. Before any Work at the site is started, CONTRACTOR and OWNER shall each deliver to the other, with copies to each additional insured identified in the Supplementary Conditions, certificates of insurance (and other evidence of insurance which either of them or any additional insured may reasonably request) which CONTRACTOR and OWNER respectively are required to purchase and maintain in accordance with paragraphs 5.4, 5.6 and 5.7.

Preconstruction Conference:

2.8. Within twenty days after the Contract Times start to run, but before any Work at the site is started, a conference attended by CONTRACTOR, ENGINEER and others as appropriate will be held to establish a working understanding among the parties as to the Work and to discuss the schedules referred to in paragraph 2.6, procedures for handling Shop Drawings and other submittals, processing Applications for Payment and maintaining required records.

Initially Acceptable Schedules:

2.9. Unless otherwise provided in the Contract Documents, at least ten days before submission of the first Application for Payment a conference attended by CONTRACTOR, ENGINEER and others as appropriate will be held to review for acceptability to ENGINEER as provided below the schedules submitted in accordance with paragraph 2.6. CONTRACTOR shall have an additional ten days to make corrections and adjustments and to complete and resubmit the schedules. No progress payment shall be made to CONTRACTOR until the schedules are submitted to and acceptable to ENGINEER as provided below. The progress schedule will be acceptable to ENGINEER as providing an orderly progression of the Work to completion within any specified Milestones and the Contract Times, but such acceptance will neither impose on ENGINEER responsibility for the sequencing, scheduling or progress of the Work nor interfere with or relieve CONTRACTOR from CONTRACTOR's full responsibility therefor. CONTRACTOR's schedule of Shop Drawing and Sample submissions will be acceptable to ENGINEER as providing a workable arrangement for reviewing and processing the required submittals. CONTRACTOR's schedule of values will be acceptable to ENGINEER as to form and substance.

ARTICLE 3 - CONTRACT DOCUMENTS: INTENT, AMENDING, REUSE

Intent:

3.1. The Contract Documents comprise the entire agreement between OWNER and CONTRACTOR concerning the Work. The Contract Documents are complementary; what is called for by one is as binding as if called for by all. The Contract Documents will be construed in accordance with the law of the place of the Project.

3.2. It is the intent of the Contract Documents to describe a functionally complete Project (or part thereof) to be constructed in accordance with the Contract Documents. Any Work, materials or equipment that may reasonably be inferred from the Contract Documents or from prevailing custom or trade usage as being required to produce the intended result will be furnished and performed whether or not specifically called for. When words or phrases which have a well-known technical or construction industry or trade meaning are used to describe Work, materials or equipment, such words or phrases shall be interpreted in accordance with that meaning. Clarifications and interpretations of the Contract Documents shall be issued by ENGINEER as provided in paragraph 9.4.

3.3. *Reference to Standards and Specifications of Technical Societies; Reporting and Resolving Discrepancies:*

3.3.1. Reference to standards, specifications, manuals or codes of any technical society, organization or association, or to the Laws or Regulations of any governmental authority, whether such reference be specific or by implication, shall mean the latest standard, specification, manual, code or Laws or Regulations in effect at the time of opening of Bids (or, on the Effective Date of the Agreement if there were no Bids), except as may be otherwise specifically stated in the Contract Documents.

3.3.2. If, during the performance of the Work, CONTRACTOR discovers any conflict, error, ambiguity or discrepancy within the Contract Documents or between the Contract Documents and any provision of any such Law or Regulation applicable to the performance of the Work or of any such standard, specification, manual or code or of any instruction of any Supplier referred to in paragraph 6.5, CONTRACTOR shall report it to ENGINEER in writing at once, and, CONTRACTOR shall not proceed with the Work affected thereby (except in an emergency as authorized by paragraph 6.23) until an amendment or supplement to the Contract Documents has been issued by one of the methods indicated in paragraph 3.5 or 3.6; provided, however, that CONTRACTOR shall not be liable to OWNER or ENGINEER for failure to report any such conflict, error, ambiguity or discrepancy unless CONTRACTOR knew or reasonably should have known thereof.

3.3.3. Except as otherwise specifically stated in the Contract Documents or as may be provided by amendment or supplement thereto issued by one of the methods indicated in paragraph 3.5 or 3.6, the provisions of the Contract Documents shall take precedence in resolving any conflict, error, ambiguity or discrepancy between the provisions of the Contract Documents and:

3.3.3.1. the provisions of any such standard, specification, manual, code or instruction (whether or not specifically incorporated by reference in the Contract Documents); or

3.3.3.2. the provisions of any such Laws or Regulations applicable to the performance of the Work (unless such an interpretation of the provisions of the Contract Documents would result in violation of such Law or Regulation).

No provision of any such standard, specification, manual, code or instruction shall be effective to change the duties and responsibilities of OWNER, CONTRACTOR or ENGINEER, or any of their subcontractors, consultants, agents, or employees from those set forth in the Contract Documents, nor shall it be effective to assign to OWNER, ENGINEER or any of ENGINEER's Consultants, agents or employees any duty or authority to supervise or direct the furnishing or performance of the Work or any duty or authority to undertake responsibility inconsistent with the

provisions of paragraph 9.13 or any other provision of the Contract Documents.

3.4. Whenever in the Contract Documents the terms "as ordered," "as directed," "as required," "as allowed," "as approved" or terms of like effect or import are used, or the adjectives "reasonable," "suitable," "acceptable," "proper" or "satisfactory" or adjectives of like effect or import are used to describe a requirement, direction, review or judgment of ENGINEER as to the Work, it is intended that such requirement, direction, review or judgment will be solely to evaluate, in general, the completed Work for compliance with the requirements of and information in the Contract Documents and conformance with the design concept of the completed Project as a functioning whole as shown or indicated in the Contract Documents (unless there is a specific statement indicating otherwise). The use of any such term or adjective shall not be effective to assign to ENGINEER any duty or authority to supervise or direct the furnishing or performance of the Work or any duty or authority to undertake responsibility contrary to the provisions of paragraph 9.13 or any other provision of the Contract Documents.

Amending and Supplementing Contract Documents:

3.5. The Contract Documents may be amended to provide for additions, deletions and revisions in the Work or to modify the terms and conditions thereof in one or more of the following ways:

3.5.1. a formal Written Amendment,

3.5.2. a Change Order (pursuant to paragraph 10.4), or

3.5.3. a Work Change Directive (pursuant to paragraph 10.1).

3.6. In addition, the requirements of the Contract Documents may be supplemented, and minor variations and deviations in the Work may be authorized, in one or more of the following ways:

3.6.1. a Field Order (pursuant to paragraph 9.5),

3.6.2. ENGINEER's approval of a Shop Drawing or Sample (pursuant to paragraphs 6.26 and 6.27), or

3.6.3. ENGINEER's written interpretation or clarification (pursuant to paragraph 9.4)

Reuse of Documents:

3.7. CONTRACTOR, and any Subcontractor or Supplier or other person or organization performing or furnishing any of the Work under a direct or indirect contract with OWNER (i) shall not have or acquire any title to or ownership rights in any of the Drawings, Specifications or other documents (or copies of any thereof) prepared by or bearing the seal of ENGINEER or ENGINEER's Consultant, and (ii) shall not reuse any of such Drawings, Specifications, other documents or copies on extensions of the Project or any other project without written consent of OWNER and ENGINEER and specific written verification or adaptation by ENGINEER.

ARTICLE 4 - AVAILABILITY OF LANDS; SUBSURFACE AND PHYSICAL CONDITIONS; REFERENCE POINTS

Availability of Lands:

4.1. OWNER shall furnish, as indicated in the Contract Documents, the lands upon which the Work is to be performed, rights-of-way and easements for access thereto, and such other lands which are designated for the use of CONTRACTOR. Upon reasonable written request, OWNER shall furnish CONTRACTOR with a correct statement of record legal title and legal description of the lands upon which the Work is to be performed and OWNER's interest therein as necessary for giving notice of or filing a mechanic's lien against such lands in accordance with applicable Laws and Regulations. OWNER shall identify any encumbrances or restrictions not of general application but specifically related to use of lands so furnished with which CONTRACTOR will have to comply in performing the Work. Easements for permanent structures or permanent changes in existing facilities will be obtained and paid for by OWNER, unless otherwise provided in the Contract Documents. If CONTRACTOR and OWNER are unable to agree on entitlement to or the amount or extent of any adjustments in the Contract Price or the Contract Times as a result of any delay in OWNER's furnishing these lands, rights-of-way or easements, CONTRACTOR may make a claim therefor as provided in Articles 11 and 12. CONTRACTOR shall provide for all additional lands and access thereto that may be required for temporary construction facilities or storage of materials and equipment.

4.2 Subsurface and Physical Conditions:

4.2.1. *Reports and Drawings:* Reference is made to the Supplementary Conditions for identification of:

4.2.1.1. *Subsurface Conditions:* Those reports of explorations and tests of subsurface conditions at or contiguous to the site that have been utilized by ENGINEER in preparing the Contract Documents; and

4.2.1.2 *Physical Conditions*: Those drawings of physical conditions in or relating to existing surface or subsurface structures at or contiguous to the site (except Underground Facilities) that have been utilized by ENGINEER in preparing the Contract Document.

4.2.2. *Limited Reliance by CONTRACTOR Authorized: Technical Data:* CONTRACTOR may rely upon the general accuracy of the "technical data" contained in such reports and drawings, but such reports and drawings are not Contract Documents. Such "technical data," is identified in the Supplementary Conditions. Except for such reliance on such "technical data," CONTRACTOR may not rely upon or make any claim against OWNER, ENGINEER or any of ENGINEER's Consultants with respect to:

4.2.2.1. the completeness of such reports and drawings for CONTRACTOR's purposes, including, but not limited to, any aspects of the means, methods, techniques, sequences and procedures of construction to be employed by CONTRACTOR and safety precautions and programs incident thereto, or

4.2.2.2. other data, interpretations, opinions and information contained in such reports or shown or indicated in such drawings, or

4.2.2.3. any CONTRACTOR interpretation of or conclusion drawn from any "technical data" or any such data, interpretations, opinions or information.

4.2.3. *Notice of Differing Subsurface or Physical Conditions:* If CONTRACTOR believes that any subsurface or physical condition at or contiguous to the site that is uncovered or revealed either:

4.2.3.1. is of such a nature as to establish that any "technical data" on which CONTRACTOR is entitled to rely as provided in paragraphs 4.2.1 and 4.2.2 is materially inaccurate, or

4.2.3.2. is of such a nature as to require a change in the Contract Documents, or

4.2.3.3. differs materially from that shown or indicated in the Contract Documents, or

4.2.3.4. is of an unusual nature, and differs materially from conditions ordinarily encountered and generally recognized as inherent in work of the character provided for in the Contract Documents; then

CONTRACTOR shall, promptly after becoming aware thereof and before further disturbing conditions affected thereby or performing any Work in connection therewith (except in an emergency as permitted by paragraph 6.23), notify OWNER and ENGINEER in writing about such

condition. CONTRACTOR shall not further disturb such conditions or perform any Work in connection therewith (except as aforesaid) until receipt of written order to do so.

4.2.4. *ENGINEER's Review:* ENGINEER will promptly review the pertinent conditions, determine the necessity of OWNER's obtaining additional exploration or tests with respect thereto and advise OWNER in writing (with a copy to CONTRACTOR) of ENGINEER's findings and conclusions.

4.2.5. *Possible Contract Documents Change:* If ENGINEER concludes that a change in the Contract Documents is required as a result of a condition that meets one or more of the categories in paragraph 4.2.3., a Work Change Directive or a Change Order will be issued as provided in Article 10 to reflect and document the consequences of such change.

4.2.6. *Possible Price and Times Adjustments:* An equitable adjustment in the Contract Price or in the Contract Times, or both, will be allowed to the extent that the existence of such uncovered or revealed condition causes an increase or decrease in CONTRACTOR's cost of, or time required for performance of, the Work; subject, however, to the following:

4.2.6.1. such condition must meet any one or more of the categories described in paragraphs 4.2.3.1. through 4.2.3.4, inclusive;

4.2.6.2. a change in the Contract Documents pursuant to paragraph 4.2.5 will not be an automatic authorization of nor a condition precedent to entitlement to any such adjustment;
4.2.6.3. with respect to Work that is paid for on a Unit Price Basis, any adjustment in Contract Price will be subject to the provisions of paragraphs 9.10 and 11.9; and

4.2.6.4. CONTRACTOR shall not be entitled to any adjustment in the Contract Price or Times if;

4.2.6.4.1. CONTRACTOR knew of the existence of such conditions at the time CONTRACTOR made a final commitment to OWNER in respect of Contract Price and Contract Times by the submission of a bid or becoming bound under a negotiated contract; or

4.2.6.4.2. the existence of such condition could reasonably have been discovered or revealed as a result of any examination, investigation, exploration, test or study of the site and contiguous areas required by the Bidding Requirements or Contract Documents to be conducted by or for CONTRACTOR prior to CONTRACTOR's making such final commitment; or

4.2.6.4.3. CONTRACTOR failed to give the written notice within the time and as required by paragraph 4.2.3.

If OWNER and CONTRACTOR are unable to agree on entitlement to or as to the amount or length of any such equitable adjustment in the Contract Price or Contract Times, a claim may be made therefor as provided in Articles 11 and 12. However, OWNER, ENGINEER and ENGINEER's Consultants shall not be liable to CONTRACTOR for any claims, costs, losses or damages sustained by CONTRACTOR on or in connection with any other project or anticipated project.

4.3. *Physical Conditions - Underground Facilities:*

4.3.1. *Shown or Indicated:* The information and data shown or indicated in the Contract Documents with respect to existing Underground Facilities at or contiguous to the site is based on information and data furnished to OWNER or ENGINEER by the owners of such Underground Facilities or by others. Unless it is otherwise expressly provided in the Supplementary Conditions:

4.3.1.1. OWNER and ENGINEER shall not be responsible for the accuracy or completeness of any such information or data; and

4.3.1.2. The cost of all of the following will be included in the Contract Price and CONTRACTOR shall have full responsibility for: (i) reviewing and checking all such information and data, (ii) locating all Underground Facilities shown or indicated in the Contract Documents, (iii) coordination of the Work with the owners of such Underground Facilities during construction, and (iv) the safety and protection of all such Underground Facilities as provided in paragraph 6.20 and repairing any damage thereto resulting from the Work.

4.3.2. *Not Shown or indicated:* If an Underground Facility is uncovered or revealed at or contiguous to the site which was not shown or indicated in the Contract Documents, CONTRACTOR shall, promptly after becoming aware thereof and before further disturbing conditions affected thereby or performing any Work in connection therewith (except in an emergency as required by paragraph 6.23), identify the owner of such Underground Facility and give written notice to that owner and to OWNER and ENGINEER. ENGINEER will promptly review the Underground Facility and determine the extent, if any, to which a change is required in the Contract Documents to reflect and document the consequences of the existence of the Underground Facility. If ENGINEER concludes that a change in the Contract Documents is required, a Work Change Directive or a Change Order will be issued as provided in Article 10 to reflect and document such consequences. During such time, CONTRACTOR shall be responsible for the safety and protection of such Underground Facility as provided in paragraph 6.20. CONTRACTOR shall be allowed an increase in the Contract Price or an extension of the Contract Times, or both, to the extent that they are attributable to the existence of any Underground Facility that was not shown or indicated in the Contract Documents and that CONTRACTOR did not know of and could not reasonably have been expected to be aware of or to have anticipated. If OWNER and CONTRACTOR are unable to agree on entitlement to or the amount or length of any such adjustment in Contract Price or Contract Times, CONTRACTOR may make a claim therefor as provided in Articles 11 and 12. However, OWNER, ENGINEER and ENGINEER's Consultants shall not be liable to CONTRACTOR for any claims, costs, losses or damages incurred or sustained by CONTRACTOR on or in connection with any other project or anticipated project.

Reference Points:

4.4. OWNER shall provide engineering surveys to establish reference points for construction which in ENGINEER's judgment are necessary to enable CONTRACTOR to proceed with the Work. CONTRACTOR shall be responsible for laying out the Work, shall protect and preserve the established reference points and shall make no changes or relocations without the prior written approval of OWNER. CONTRACTOR shall report to ENGINEER whenever any reference point is lost or destroyed or requires relocation because of necessary changes in grades or locations, and shall be responsible for the accurate replacement or relocation of such reference points by professionally qualified personnel.

4.5 Asbestos, PCBs, Petroleum, Hazardous Waste or Radioactive Material:

4.5.1. OWNER shall be responsible for any Asbestos, PCBs, Petroleum, Hazardous Waste or Radioactive Material uncovered or revealed at the site which was not shown or indicated in Drawings or Specifications or identified in the Contract Documents to be within the scope of the Work and which may present a substantial danger to persons or property exposed thereto in connection with the Work at the site. OWNER shall not be responsible for any such materials brought to the site by CONTRACTOR, Subcontractor, Suppliers or anyone else for whom CONTRACTOR is responsible.

4.5.2. CONTRACTOR shall immediately: (i) stop all Work in connection with such hazardous condition and in any area affected thereby (except in an emergency as required by paragraph 6.23),

and (ii) notify OWNER and ENGINEER (and thereafter confirm such notice in writing). OWNER shall promptly consult with ENGINEER concerning the necessity for OWNER to retain a qualified expert to evaluate such hazardous condition or take corrective action, if any. CONTRACTOR shall not be required to resume Work in connection with such hazardous condition or in any such affected area until after OWNER has obtained any required permits related thereto and delivered to CONTRACTOR special written notice: (i) specifying that such condition and any affected area is or has been rendered safe for the resumption of Work, or (ii) specifying any special conditions under which such Work may be resumed safely. If OWNER and CONTRACTOR cannot agree as to entitlement to or the amount or extent of an adjustment, if any, in Contract Price or Contract Times as a result of such Work stoppage or such special conditions under which Work is agreed by CONTRACTOR to be resumed, either party may make a claim therefor as provided in Articles 11 and 12.

4.5.3. If after receipt of such special written notice CONTRACTOR does not agree to resume such Work based on a reasonable belief it is unsafe, or does not agree to resume such Work under such special conditions, then OWNER may order such portion of the Work that is in connection with such hazardous condition or in such affected area to be deleted from the Work. If OWNER and CONTRACTOR cannot agree as to entitlement to or the amount or extent of an adjustment, if any, in Contract Price or Contract Times as a result of deleting such portion of the Work then either party may make a claim therefor as provided in Articles 11 and 12. OWNER may have such deleted portion of the Work performed by OWNER's own forces or others in accordance with Article 7.

4.5.4. To the fullest extent permitted by Laws and Regulations, OWNER shall indemnify and hold harmless CONTRACTOR, Subcontractors, ENGINEER, ENGINEER's Consultants and the officers, directors, employees, agents, other consultants and subcontractors of each and any of them from and against all claims, costs, losses and damages arising out of or resulting from such hazardous condition, provided that: (i) any such claim, cost, loss or damage is attributable to bodily injury, sickness, disease or death, or to injury to or destruction of tangible property (other than the Work itself), including the loss of use resulting therefrom, and (ii) nothing in this subparagraph 4.5.4 shall obligate OWNER to indemnify any person or entity from and against the consequences of that person's or entity's own negligence.

4.5.5. The provisions of paragraphs 4.2 and 4.3 are not intended to apply to Asbestos, PCBs, Petroleum, Hazardous Waste or Radioactive Material uncovered or revealed at the site.

ARTICLE 5 - BONDS AND INSURANCE

Performance, Payment and other Bonds:

5.1. CONTRACTOR shall furnish Performance and Payment Bonds, each in an amount at least equal to the Contract Price as security for the faithful performance and payment of all CONTRACTOR's obligations under the Contract Documents. These Bonds shall remain in effect at least until one year after the date when final payment becomes due, except as provided otherwise by Laws or Regulations or by the Contract Documents. CONTRACTOR shall also furnish such other Bonds as are required by the Supplementary Conditions. ~~All Bonds shall be in the form prescribed by the Contract Documents except as provided otherwise by Laws or Regulations., and shall be executed by such sureties as are named in the current list of "Companies Holding Certificates of Authority as Acceptable Sureties on Federal Bonds and as Acceptable Reinsuring Companies" as published in Circular 570 (amended) by the Audit Staff, Bureau of Government Financial Operations, U.S. Treasury Department.~~ All Bonds signed by an agent must be accompanied by a certified copy of such agent's authority to act.

SEE SUPPLEMENTARY CONDITIONS

5.2. If the surety on any Bond furnished by CONTRACTOR is declared a bankrupt or becomes insolvent or its right to do business is terminated in any state where any part of the Project is located or it ceases to meet the requirements of paragraph 5.1, CONTRACTOR shall within ten days thereafter substitute another Bond and surety, both of which must be acceptable to OWNER.

5.3. ***Licensed Sureties and Insurers; Certificates of Insurance:***

5.3.1. All Bonds and insurance required by the Contract Documents to be purchased and maintained by OWNER or CONTRACTOR shall be obtained from surety or insurance companies that are duly licensed or authorized in the jurisdiction in which the Project is located to issue Bonds or insurance policies for the limits and coverages so required. Such surety and insurance companies shall also meet such additional requirements and qualifications as may be provided in the Supplementary Conditions.

5.3.2. CONTRACTOR shall deliver to OWNER, with copies to each additional insured identified in the Supplementary Conditions, certificates of insurance (and other evidence of insurance requested by OWNER or any other additional insured) which CONTRACTOR is required to purchase and maintain in accordance with paragraph 5.4. OWNER shall deliver to CONTRACTOR, with copies to each additional insured identified in the Supplementary Conditions, certificates of insurance (and other evidence of insurance requested by CONTRACTOR or any other additional insured) which OWNER is required to purchase and maintain in accordance with paragraphs 5.6 and 5.7 hereof.

CONTRACTOR's Liability Insurance:

5.4. CONTRACTOR shall purchase and maintain such liability and other insurance as is appropriate for the Work being performed and furnished and as will provide protection from claims set forth below which may arise out of or result from CONTRACTOR's performance and furnishing of the Work and CONTRACTOR's other obligations under the Contract Documents, whether it is to be performed or furnished by CONTRACTOR, any Subcontractor or Supplier, or by anyone directly or indirectly employed by any of them to perform or furnish any of the Work, or by anyone for whose acts any of them may be liable:

5.4.1. claims under workers' compensation, disability benefits and other similar employee benefit acts;

5.4.2. claims for damages because of bodily injury, occupational sickness or disease, or death of CONTRACTOR's employees;

5.4.3. claims for damages because of bodily injury, sickness or disease, or death of any person other than CONTRACTOR's employees;

5.4.4. claims for damages insured by customary personal injury liability coverage which are sustained: (i) by any person as a result of an offense directly or indirectly related to the employment of such person by CONTRACTOR, or (ii) by any other person for any other reason;

5.4.5. claims for damages, other than to the Work itself, because of injury to or destruction of tangible property wherever located, including loss of use resulting therefrom; and

5.4.6. claims for damages because of bodily injury or death of any person or property damage arising out of the ownership, maintenance or use of any motor vehicle.

The policies of insurance so required by this paragraph 5.4 to be purchased and maintained shall:

5.4.7. with respect to insurance required by paragraphs 5.4.3 through 5.4.6 inclusive, include as additional insureds (subject to any customary exclusion in respect of professional liability) OWNER, ENGINEER, ENGINEER's Consultants and any other

persons or entities identified in the Supplementary Conditions, all of whom shall be listed as additional insureds, and include coverage for the respective officers and employees of all such additional insureds;

5.4.8. include the specific coverages and be written for not less than the limits of liability provided in the Supplementary Conditions or required by Laws or Regulations, whichever is greater;

5.4.9. include completed operations insurance;

5.4.10. include contractual liability insurance covering CONTRACTOR's indemnity obligations under paragraphs 6.12, 6.16 and 6.31 through 6.33;

5.4.11. contain a provision or endorsement that the coverage afforded will not be canceled, materially changed or renewal refused until at least thirty days prior written notice has been given to OWNER and CONTRACTOR and to each other additional insured identified in the Supplementary Conditions to whom a certificate of insurance has been issued (and the certificates of insurance furnished by the CONTRACTOR pursuant to paragraph 5.3.2 will so provide);

5.4.12. remain in effect at least until final payment and at all times thereafter when CONTRACTOR may be correcting, removing or replacing *defective* Work in accordance with paragraph 13.12; and

5.4.13. with respect to completed operations insurance, and any insurance coverage written on a claims-made basis, remain in effect for at least two years after final payment (and CONTRACTOR shall furnish OWNER and each other additional insured identified in the Supplementary Conditions to whom a certificate of insurance has been issued evidence satisfactory to OWNER and any such additional insured of continuation of such insurance at final payment and one year thereafter).

OWNER's Liability Insurance:

5.5. In addition to the insurance required to be provided by CONTRACTOR under paragraph 5.4, OWNER, at OWNER's option, may purchase and maintain at OWNER's expense OWNER's own liability insurance as will protect OWNER against claims which may arise from operations under the Contract Documents.

Property Insurance:

~~5.6 Unless otherwise provided in the Supplementary Conditions, OWNER shall purchase and maintain property insurance upon the Work at the Site in the amount of the full replacement cost thereof (subject to such deductible amounts as may be provided in the Supplementary Conditions or required by Laws and Regulations). This insurance shall:~~

~~5.6.1 include the interests of OWNER, CONTRACTOR, Subcontractors, ENGINEER, ENGINEER's Consultants and any other persons or entities identified in the Supplementary Conditions, each of whom is deemed to have an insurable interest and shall be listed as an insured or additional insured;~~

~~5.6.2 be written on a Builder's Risk "all risk" or open peril or special causes of loss policy form that shall at least include insurance for physical loss or damage to the Work, temporary buildings, falsework and Work in transit and shall insure against at least the following perils: fire, lightning, extended coverage, theft, vandalism and malicious mischief, earthquake, collapse, debris removal, demolition occasioned by enforcement of Laws and Regulations, water damage, and such other perils as may be specifically required by the Supplementary Conditions;~~

~~5.6.3 Include expenses incurred in the repair or replacement of any insured property (including but not limited to fees and charges of engineers and architects);~~

~~5.6.4 Cover materials and equipment stored at the site or at another location that was agreed to in writing by OWNER prior to being incorporated in the Work, provided that such materials and equipment have been included in an Application for Payment recommended by ENGINEER; and~~

~~5.6.5 be maintained in effect until final payment is made unless otherwise agreed to in writing by OWNER, CONTRACTOR and ENGINEER with thirty days written notice to each other additional insured to whom a certificate of insurance has been issued.~~

SEE SUPPLEMENTARY CONDITIONS

5.7. OWNER shall purchase and maintain such boiler and machinery insurance or additional property insurance as may be required by the Supplementary Conditions or Laws or Regulations which will include the interests of OWNER, CONTRACTOR, Subcontractors, ENGINEER, ENGINEER's Consultants and any other persons or entities identified in the Supplementary Conditions, each of whom is deemed to have an insurable interest and shall be listed as an insured or additional insured.

5.8. All the policies of insurance (and the certificates or other evidence thereof) required to be purchased and maintained by OWNER in accordance with paragraphs 5.6 and 5.7 will contain a provision or endorsement that the coverage afforded will not be canceled or materially changed or renewal refused until at least thirty days' prior written notice has been given to OWNER and CONTRACTOR and to each other additional insured to whom a certificate of insurance has been issued and will contain waiver provisions in accordance with paragraph 5.11.

5.9. OWNER shall not be responsible for purchasing and maintaining any property insurance to protect the interests of CONTRACTOR, Subcontractor or others in the Work to the extent of any deductible amounts that are identified in the Supplementary Conditions. The risk of loss within such identified deductible amount, will be borne by CONTRACTOR, Subcontractor or others suffering any such loss and if any of them wishes property insurance coverage within the limits of such amounts, each may purchase and maintain it at the purchaser's own expense.

5.10. If CONTRACTOR requests in writing that other special insurance be included in the property insurance policies provided under paragraphs 5.6 or 5.7, OWNER shall, if possible, include such insurance, and the cost thereof will be charged to CONTRACTOR by appropriate Change Order or Written Amendment. Prior to commencement of the Work at the site, OWNER shall in writing advise CONTRACTOR whether or not such other insurance has been procured by OWNER.

5.11. ***Waiver of Rights:***

5.11.1. OWNER and CONTRACTOR intend that all policies purchased in accordance with paragraphs 5.6 and 5.7 will protect OWNER, CONTRACTOR, Subcontractors, ENGINEER, ENGINEER's Consultants and all other persons or entities identified in the Supplementary Conditions to be listed as insureds or additional insureds in such policies and will provide primary coverage for all losses and damages caused by the perils covered thereby. All such policies shall contain provisions to the effect that in the event of payment of any loss or damage the insurers will have not rights of recovery against any of the insureds or additional insureds thereunder. OWNER and CONTRACTOR waive all rights against each other and their respective officers, directors, employees and agents for all losses and damages caused by, arising out of or resulting from any of the perils covered by such policies and any other property insurance applicable to the Work; and, in addition, waive all such rights against Subcontractors, ENGINEER, ENGINEER's Consultants and all other persons or entities identified in the Supplementary Conditions to be listed as insureds or additional insureds under such policies for losses and damages so caused. None of the above waivers shall extend to

the rights that any party making such waiver may have to the proceeds of insurance held by OWNER as trustee or otherwise payable under any policy so issued.

5.11.2. In addition, OWNER waives all rights against CONTRACTOR, Subcontractors, ENGINEER, ENGINEER's Consultants and the officers, directors, employees and agents of any of them, for:

5.11.2.1. loss due to business interruption, loss of use or other consequential loss extending beyond direct physical loss or damage to OWNER's property or the Work caused by, arising out of or resulting from fire or other peril, whether or not insured by OWNER; and

5.11.2.2. loss or damage to the completed Project or part thereof caused by, arising out of or resulting from fire or other insured peril covered by any property insurance maintained on the completed Project or part thereof by OWNER during partial utilization pursuant to paragraph 14.10, after substantial completion pursuant to paragraph 14.8 or after final payment pursuant to paragraph 14.13.

Any insurance policy maintained by OWNER covering any loss, damage or consequential loss referred to in this paragraph 5.11.2 shall contain provisions to the effect that in the event of payment of any such loss, damage or consequential loss the insurers will have no rights of recovery against any of CONTRACTOR, Subcontractors, ENGINEER, ENGINEER's Consultants and the officers, directors, employees and agents of any of them.

Receipt and Application of Insurance Proceeds

5.12. Any insured loss under the policies of insurance required by paragraphs 5.6 and 5.7 will be adjusted with OWNER and made payable to OWNER as fiduciary for the insureds, as their interests may appear, subject to the requirements of any applicable mortgage clause and of paragraph 5.13. OWNER shall deposit in a separate account any money so received, and shall distribute it in accordance with such agreement as the parties in interest may reach. If no other special agreement is reached the damaged Work shall be repaired or replaced, the moneys so received applied on account thereof and the Work and the cost thereof covered by an appropriate Change Order or Written Amendment.

5.13. OWNER as fiduciary shall have power to adjust and settle any loss with the insurers unless one of the parties in interest shall object in writing within fifteen days after the occurrence of loss to OWNER's exercise of this power. If such objection be made, OWNER as fiduciary shall make settlement with the insurers in accordance with such agreement as the parties in interest may reach. If no such agreement among the parties in interest is reached, OWNER as fiduciary shall adjust and settle the loss with the insurers and, if required in writing by any party in interest, OWNER as fiduciary shall give bond for the proper performance of such duties.

Acceptance of Bonds and Insurance; Option to Replace:

5.14. If either party (OWNER or CONTRACTOR) has any objection to the coverage afforded by or other provisions of the Bonds or insurance required to be purchased and maintained by the other party in accordance with Article 5 on the basis of non-conformance with the Contract Documents, the objecting party shall so notify the other party in writing within ten days after receipt of the certificates (or other evidence requested) required by paragraph 2.7. OWNER and CONTRACTOR shall each provide to the other such additional information in respect of insurance provided as the other may reasonably request. If either party does not purchase or maintain all of the Bonds and insurance required of such party by the Contract Documents, such party shall notify the other party in writing of such failure to purchase prior to the start of the Work, or of such failure to maintain prior to any change in the required coverage. Without prejudice to any other right or remedy, the other party may elect to obtain equivalent Bonds or insurance to protect such other party's interests at the expense of the party who was required to provide such coverage, and a Change order shall be issued to adjust the Contract Price accordingly.

Partial utilization - Property Insurance:

5.15. If OWNER finds it necessary to occupy or use a portion or portions of the Work prior to Substantial Completion of all the Work, such use or occupancy may be accomplished in accordance with paragraph 14.10; provided that no such use or occupancy shall commence before the insurers providing the property insurance have acknowledged notice thereof and in writing effected any changes in coverage necessitated thereby. The insurers providing the property insurance shall consent by endorsement on the policy or policies, but the property insurance shall not be canceled or permitted to lapse on account of any such partial use or occupancy.

ARTICLE 6 - CONTRACTOR'S RESPONSIBILITIES

Supervision and Superintendence:

6.1. CONTRACTOR shall supervise, inspect and direct the Work competently and efficiently, devoting such attention thereto and applying such skills and expertise as may be necessary to perform the Work in accordance with the Contract Documents. CONTRACTOR shall be solely responsible for the means, methods, techniques, sequences and procedures of construction, but CONTRACTOR shall not be responsible for the negligence of others in the design or specification of a specific means, method, technique, sequence or procedure of construction which is shown or indicated in and expressly required by the Contract Documents. CONTRACTOR shall be responsible to see that the completed Work complies accurately with the Contract Documents.

6.2. CONTRACTOR shall keep on the Work at all times during its progress a competent resident superintendent, who shall not be replaced without written notice to OWNER and ENGINEER except under extraordinary circumstances. The superintendent will be CONTRACTOR's representative at the site and shall have authority to act on behalf of CONTRACTOR. All communications to the superintendent shall be as binding as if given to CONTRACTOR.

Labor, Materials and Equipment:

6.3. CONTRACTOR shall provide competent, suitably qualified personnel to survey, lay out and construct the Work as required by the Contract Documents. CONTRACTOR shall at all times maintain good discipline and order at the site. Except as otherwise required for the safety or protection of persons or the Work or property at the site or adjacent thereto, and except as otherwise indicated in the Contract Documents, all Work at the site shall be performed during regular working hours and CONTRACTOR will not permit overtime work or the performance of Work on Saturday, Sunday or any legal holiday without OWNER's written consent given after prior written notice to ENGINEER.

6.4 Unless otherwise specified in the General Requirements, CONTRACTOR shall furnish and assume full responsibility for all materials, equipment, labor, transportation, construction equipment and machinery, tools, appliances, fuel, power, light, heat, telephone, water, sanitary facilities, temporary facilities and all other facilities and incidentals necessary for the furnishing, performance, testing, start-up and completion of the Work.

6.5 All materials and equipment shall be of good quality and new, except as otherwise provided in the Contract Documents. All warranties and guarantees specifically called for by the Specifications shall expressly run to the benefit of OWNER. If required by ENGINEER, CONTRACTOR shall furnish satisfactory evidence (including reports of required tests) as to the kind and quality of materials and equipment. All materials and equipment shall be applied, installed, connected, erected, used, cleaned and conditioned in accordance with instructions of the applicable Supplier, except as otherwise provided in the Contract Documents.

Progress Schedule:

6.6 CONTRACTOR shall adhere to the progress schedule established in accordance with paragraph 2.9 as it may be adjusted from time to time as provided below:

6.6.1 CONTRACTOR shall submit to ENGINEER for acceptance (to the extent indicated in paragraph 2.9) proposed adjustments in the progress schedule that will not change the Contract Times (or Milestones). Such adjustments will conform generally to the progress schedule then in effect and additionally will comply with any provisions of the General Requirements applicable thereto.

6.6.2 Proposed adjustments in the progress schedule that will change the Contract Times (or Milestones) shall be submitted in accordance with the requirements of paragraph 12.1. Such adjustments may only be made by a Change Order or Written Amendment in accordance with Article 12.

6.7. Substitutes and "Or-Equal" Items:

6.7.1. Whenever an item of material or equipment is specified or described in the Contract Documents by using the name of a proprietary item or the name of a particular Supplier, the specification or description is intended to establish the type, function and quality required. Unless the specification or description contains or is followed by words reading that no like, equivalent or "or-equal" item or no substitution is permitted, other items of material or equipment or material or equipment of other Suppliers may be accepted by ENGINEER under the following circumstances:

6.7.1.1. *"Or-Equal"*: If in ENGINEER's sole discretion an item of material or equipment proposed by CONTRACTOR is functionally equal to that named and sufficiently similar so that no change in related Work will be required, it may be considered by ENGINEER as an "or-equal" item, in which case review and approval of the proposed item may, in ENGINEER's sole discretion, be accomplished without compliance with some or all of the requirements for acceptance of proposed substitute items.

6.7.1.2. *Substitute Items:* If in ENGINEER's sole discretion an item of material or equipment proposed by CONTRACTOR does not qualify as an "or-equal" item under subparagraph 6.7.1.1, it will be considered a proposed substitute item. CONTRACTOR shall submit sufficient information as provided below to allow ENGINEER to determine that the item of material or equipment proposed is essentially equivalent to that named and an acceptable substitute therefor. The procedure for review by the ENGINEER will include the following as supplemented in the General Requirements and as ENGINEER may decide is appropriate under the circumstances. Requests for review of proposed substitute items of material or equipment will not be accepted by ENGINEER from anyone other than CONTRACTOR. If CONTRACTOR wishes to furnish or use a substitute item of material or equipment, CONTRACTOR shall first make written application to ENGINEER for acceptance thereof, certifying that the proposed substitute will perform adequately the functions and achieve the results called for by the general design, be similar in substance to that specified and be suited to the same use as that specified. The application will state the extent, if any, to which the evaluation and acceptance of the proposed substitute will prejudice CONTRACTOR's achievement of Substantial Completion on time, whether or not acceptance of the substitute for use in the Work will require a change in any of the Contract Documents (or in the provisions of any other direct contract with OWNER for work on the Project) to adapt the design to the proposed substitute and whether or not incorporation or use of the substitute in connection with the Work is subject to payment of any license fee or royalty. All variations of the proposed substitute from that specified will be identified in the application and available maintenance, repair and replacement service will be indicated. The application will also contain an itemized estimate of all costs or credits that will result directly or indirectly from acceptance of such substitute, including costs of redesign and claims of other contractors affected by the resulting change, all of which will be considered by ENGINEER in evaluating the proposed substitute. ENGINEER may require CONTRACTOR to furnish additional data about the proposed substitute.

6.7.1.3. *CONTRACTOR's Expense:* All data to be provided by CONTRACTOR in support of any proposed "or-equal" or substitute item will be at CONTRACTOR's expense.

6.7.2. *Substitute Construction Methods or Procedures:* If a specific means, method, technique, sequence or procedure of construction is shown or indicated in and expressly required by the Contract Documents, CONTRACTOR may furnish or utilize a substitute means, method, technique, sequence or procedure of construction acceptable to ENGINEER. CONTRACTOR shall submit sufficient information to allow ENGINEER, in ENGINEER's sole discretion, to determine that the substitute proposed is equivalent to that expressly called for by the Contract Documents. The procedure for review by ENGINEER will be similar to that provided in subparagraph 6.7.1.2.

6.7.3. *Engineer's Evaluation:* ENGINEER will be allowed a reasonable time within which to evaluate each proposal or submittal made pursuant to paragraphs 6.7.1.2 and 6.7.2. ENGINEER will be the sole judge of acceptability. No "or-equal" or substitute will be ordered, installed or utilized without ENGINEER's prior written acceptance which will be evidenced by either a Change Order or an approved Shop Drawing. OWNER may require CONTRACTOR to furnish at CONTRACTOR's expense a special performance guarantee or other surety with respect to any "or-equal" or substitute. ENGINEER will record time required by ENGINEER and ENGINEER's Consultants in evaluating substitutes proposed or submitted by CONTRACTOR pursuant to paragraphs 6.7.1.2. and 6.7.2 and in making changes in the Contract Documents (or in the provisions of any other direct contract with OWNER for work on the Project) occasioned thereby. Whether or not ENGINEER accepts a substitute item so proposed or submitted by CONTRACTOR, CONTRACTOR shall reimburse OWNER for charges of ENGINEER and ENGINEER's Consultants for evaluating each such proposed substitute item.

Concerning Subcontractors, Suppliers and Others:

6.8.1. CONTRACTOR shall not employ any Subcontractor, Supplier or other person or organization (including those acceptable to OWNER and ENGINEER as indicated in paragraph 6.8.2), whether initially or as a substitute, against whom OWNER or ENGINEER may have reasonable objection. CONTRACTOR shall not be required to employ any Subcontractor, Supplier or other person or organization to furnish or perform any of the Work against whom CONTRACTOR has reasonable objection.

6.8.2. If the Supplementary Conditions require the identity of certain Subcontractors, Suppliers or other persons or organizations (including those who are to furnish the principal items of materials or equipment) to be submitted to OWNER in advance of the specified date prior to the Effective Date of the Agreement for acceptance by OWNER and ENGINEER, and if CONTRACTOR has submitted a list thereof in accordance with the Supplementary Conditions, OWNER's or ENGINEER's acceptance (either in writing or by failing to make written objection thereto by the date indicated for acceptance or objection thereto by the date indicated for acceptance or objection in the bidding documents or the Contract Documents) of any such Subcontractor, Supplier or other person or organization so identified may be revoked on the basis of reasonable objection after due investigation, in which case CONTRACTOR shall submit an acceptable substitute, the Contract Price will be adjusted by the difference in the cost occasioned by such substitution and an appropriate Change Order will be issued or Written Amendment signed. No acceptance by OWNER or ENGINEER of any such Subcontractor, Supplier or other person or organization shall constitute a waiver of any right of OWNER or ENGINEER to reject *defective* Work.

6.9.1. CONTRACTOR shall be fully responsible to OWNER and ENGINEER for all acts and omissions of the Subcontractors, Suppliers and other persons and organizations performing or furnishing any of the Work under a direct or indirect contract with CONTRACTOR just as CONTRACTOR is responsible for CONTRACTOR's own acts and omissions. Nothing in the Contract Documents shall create for the benefit of any such Subcontractor, Supplier or other person or organization any contractual relationship between OWNER or ENGINEER and any such Subcontractor, Supplier, or other person or organization, nor shall it create any obligation on the part of OWNER or ENGINEER to pay or to see to the payment of any moneys due any such Subcontractor, Supplier or other person or organization except as may otherwise be required by Laws and Regulations.

6.9.2. CONTRACTOR shall be solely responsible for scheduling and coordinating the Work of Subcontractors, Suppliers and other persons and organizations performing or furnishing any of the Work under a direct or indirect contract with CONTRACTOR. CONTRACTOR shall require all Subcontractors, Suppliers and such other persons and organizations performing or furnishing any of the Work to communicate with the ENGINEER through CONTRACTOR.

6.10. The divisions and sections of the Specifications and the identifications of any Drawings shall not control CONTRACTOR in dividing the Work among Subcontractors or Suppliers or delineating the Work to be performed by an specific trade.

6.11. All Work performed by CONTRACTOR by a Subcontractor or Supplier will be pursuant to an appropriate agreement between CONTRACTOR and the Subcontractor or Supplier which specifically binds the Subcontractor or Supplier to the applicable terms and conditions of the Contract Documents for the benefit of OWNER and ENGINEER. Whenever any such agreement is with a Subcontractor or Supplier who is listed as an additional insured on the property insurance provided in paragraph 5.6 or 5.7, the agreement between the CONTRACTOR and the Subcontractor or Supplier will contain provisions whereby the Subcontractor or Supplier waives all rights against OWNER, CONTRACTOR, ENGINEER, ENGINEER's Consultants and all other additional insureds for all losses and damages cause by, arising out of or resulting from any of the perils covered by such policies and any other property insurance applicable to the Work. If the insurers on any such policies require separate waiver forms to be signed by any Subcontractor or Supplier, CONTRACTOR will obtain the same.

Patent Fees and Royalties:

6.12. CONTRACTOR shall pay all license fees and royalties and assume all costs incident to the use in the performance of the Work or the incorporation in the Work of any invention, design, process, product or device which is the subject of patent rights or copyrights held by others. If a particular invention, design, process, product or device is specified in the Contract Documents for use in the performance of the Work and if to the actual knowledge of OWNER or ENGINEER its use is subject to patent rights or copyrights calling for the payment of any license fee or royalty to others, the existence of such rights shall be disclosed by OWNER in the Contract Documents. To the fullest extent permitted by Laws and Regulations, CONTRACTOR shall indemnify and hold harmless OWNER, ENGINEER, ENGINEER's Consultants and the officers, directors, employees, agents and other consultants of each and any of them from and against all claims, costs, losses and damages arising out of or resulting from any infringement of patent rights or copyrights incident to the use in the performance of the Work or resulting from the incorporation in the Work of any invention, design, process, product or device not specified in the Contract Documents.

Permits:

6.13. Unless otherwise provided in the Supplementary Conditions, CONTRACTOR shall obtain and pay for all construction permits and licenses. OWNER shall assist CONTRACTOR, when necessary, in obtaining such permits and licenses. CONTRACTOR shall pay all governmental charges and inspection fees necessary for the prosecution of the Work, which are applicable at the time of opening of Bids, or, if there are no Bids, on the Effective Date of the Agreement. CONTRACTOR shall pay all charges of utility owners for connections to the Work, and OWNER shall pay all charges of such utility owners for capital costs related thereto such as plant investment fees.

Laws and Regulations:

6.14.1 CONTRACTOR shall give all notices and comply with all Laws and Regulations applicable to furnishing and performance of the Work. Except where otherwise expressly required by applicable Laws and Regulations, neither OWNER nor ENGINEER shall be responsible for monitoring CONTRACTOR's compliance with any Laws or Regulations.

6.14.2. If CONTRACTOR performs any Work knowing or having reason to know that it is contrary to Laws or Regulations, CONTRACTOR shall bear all claims, costs, losses and damages caused by, arising out of or resulting therefrom; however, it shall not be CONTRACTOR's primary responsibility to make certain that the Specifications and Drawings are in accordance with Laws and Regulations, but this shall not relieve CONTRACTOR of CONTRACTOR's obligations under paragraph 3.3.2.

Taxes:

6.15. CONTRACTOR shall pay all sales, consumer, use and other similar taxes required to be paid by CONTRACTOR in accordance with the Laws and Regulations of the place of the Project which are applicable during the performance of the Work.

SEE SUPPLEMENTARY CONDITIONS

Use of Premises:

6.16. CONTRACTOR shall confine construction equipment, the storage of materials and equipment and the operations of workers to the site and land and areas identified in and permitted by the Contract Documents and other land and areas permitted by Laws and Regulations, rights-of-way, permits and easements, and shall not unreasonably encumber the premises with construction equipment or other materials or equipment. CONTRACTOR shall assume full responsibility for any damage to any such land or area, or to the owner or occupant thereof or of any adjacent land or areas, resulting from the performance of the Work. Should any claim be made by any such owner or occupant because of the performance of the Work, CONTRACTOR shall promptly settle with such other party by negotiation or otherwise resolve the claim by arbitration or other dispute resolution proceeding or at law. CONTRACTOR shall, to the fullest extent permitted by Laws and Regulations, indemnify and hold harmless OWNER, ENGINEER, ENGINEER's Consultant and anyone directly or indirectly employed by any of them from and against all claims, costs, losses and damages arising out of or resulting from any claim or action, legal or equitable, brought by any such owner or occupant against OWNER, ENGINEER, or any other party indemnified hereunder to the extent caused by or based upon CONTRACTOR's performance of the Work.

6.17. During the progress of the Work, CONTRACTOR shall keep the premises free from accumulations of waste materials, rubbish and other debris resulting from the Work. At the completion of the Work CONTRACTOR shall remove all waste materials, rubbish and debris from and about the premises as well as all tools, appliances, construction equipment and machinery and surplus materials. CONTRACTOR shall leave the site clean and ready for occupancy by OWNER at Substantial Completion of the Work. CONTRACTOR shall restore to original condition all property not designated for alteration by the Contract Documents.

6.18. CONTRACTOR shall not load nor permit any part of any structure to be loaded in any manner that will endanger the structure, nor shall CONTRACTOR subject any part of the Work or adjacent property to stresses or pressures that will endanger it.

Record Documents:

6.19. CONTRACTOR shall maintain in a safe place at the site one record copy of all Drawings, Specifications, Addenda, Written Amendments, Change Orders, Work Change Directives, Field Orders and written interpretations and clarifications (issued pursuant to paragraph 9.4) in good order and annotated to show all changes made during construction. These record documents together with all approved Samples and a counterpart of all approved Shop Drawings will be available to ENGINEER for reference. Upon completion of the Work, these record documents, Samples and Shop Drawings will be delivered to ENGINEER for OWNER.

Safety and Protection:

6.20. CONTRACTOR shall be responsible for initiating, maintaining and supervising all safety precautions and programs in connection with the Work. CONTRACTOR shall take all necessary precautions for the safety of, and shall provide the necessary protection to prevent damage, injury or loss to:

6.20.1 all persons on the Work site or who may be affected by the Work;

6.20.2 all the Work and materials and equipment to be incorporated therein, whether in storage on or off the site; and

6.20.3. other property at the site or adjacent thereto, including trees, shrubs, lawns, walks, pavements, roadways, structures, utilities and Underground Facilities not designated for removal, relocation or replacement in the course of construction.

CONTRACTOR shall comply with all applicable Laws and Regulations of any public body having jurisdiction for safety of persons or property or to protect them from damage, injury or loss; and shall erect and maintain all necessary safeguards for such safety and protection. CONTRACTOR shall notify owners of adjacent property and of Underground Facilities and utility owners when prosecution of the Work may affect them, and shall cooperate with them in the protection, removal, relocation and replacement of their property. All damage, injury or loss to any property referred to in paragraph 6.20.2 or 6.20.3 caused, directly or indirectly, in whole or in part, by CONTRACTOR, and Subcontractor, Supplier or any other person or organization directly or indirectly employed by any of them to perform or furnish any of the Work or anyone for whose acts any of them may be liable, shall be remedied by CONTRACTOR (except damage or loss attributable to the fault of Drawings or Specifications or to the acts or omissions of OWNER or ENGINEER or ENGINEER's Consultant or anyone employed by any of them or anyone for whose acts any of them may be liable, and not attributable, directly or indirectly, in whole or in part, to the fault or negligence of CONTRACTOR or any Subcontractor, Supplier or other person or organization directly or indirectly employed by any of them). CONTRACTOR's duties and responsibilities for safety and for protection of the Work shall continue until such time as all the Work is completed and ENGINEER has issued a notice to OWNER and CONTRACTOR in accordance with paragraph 14.13 that the Work is acceptable (except as otherwise expressly provided in connection with Substantial Completion).

Safety Representative:

6.21. CONTRACTOR shall designate a qualified and experienced safety representative at the site whose duties and responsibilities shall be the prevention of accidents and the maintaining and supervising of safety precautions and programs.

Hazard Communication Programs:

6.22. CONTRACTOR shall be responsible for coordinating any exchange of material safety data sheets or other hazards communication information required to be made available to or exchanged between or among employers at the site in accordance with Laws or Regulations.

Emergencies:

6.23. In emergencies affecting the safety or protection of persons or the Work or property at the site or adjacent thereto, CONTRACTOR, without special instruction or authorization from OWNER or ENGINEER, is obligated to act to prevent threatened damage, injury, or loss. CONTRACTOR shall give ENGINEER prompt written notice if CONTRACTOR believes that any significant changes in the Work or variations from the Contract Documents have been caused thereby. If ENGINEER determines that a change in the Contract Documents is required because of the action taken by CONTRACTOR in response to such an emergency, a Work Change Directive or Change Order will be issued to document the consequences of such action.

6.24. Shop Drawings and Samples:

6.24.1. CONTRACTOR shall submit Shop Drawings to ENGINEER for review and approval in accordance with the accepted schedule of Shop Drawings and Sample submittals (see paragraph 2.9). All submittals will be identified as ENGINEER may require and in the number of copies specified in the General Requirements. The data shown on the Shop Drawings will be complete with respect to quantities, dimensions, specified performance and design criteria, materials and similar data to show ENGINEER the materials and equipment CONTRACTOR proposes to provide and to enable ENGINEER to review the information for the limited purposes required by paragraph 6.26.

6.24.2 CONTRACTOR shall also submit Samples to ENGINEER for review and approval in accordance with said accepted schedule of Shop Drawings and Sample submittals. Each Sample will be identified clearly as to material, Supplier, pertinent data such as catalog numbers and the use for which intended and otherwise as ENGINEER may require to enable ENGINEER to review the submittal for the limited purposes required by paragraph 6.26. The numbers of each Sample to be submitted will be as specified in the Specifications.

6.25. Submittal Procedures:

6.25.1. Before submitting each Shop Drawing or Sample, CONTRACTOR shall have determined and verified:

6.25.1.1. all field measurements, quantities, dimensions, specified performance criteria, installation requirements, materials, catalog numbers and similar information with respect thereto,

6.25.1.2. all materials with respect to intended use, fabrication, shipping, handling, storage, assembly and installation pertaining to the performance of the Work, and

6.25.1.3. all information relative to CONTRACTOR's sole responsibilities in respect of means, methods, techniques, sequences and procedures of construction and safety precautions and programs incident thereto.

CONTRACTOR shall also have reviewed and coordinated each Shop Drawing or Sample with other Shop Drawings and Samples and with the requirements of the Work and the Contract Documents.

6.25.2. Each submittal will bear a stamp or specific written indication that CONTRACTOR has satisfied CONTRACTOR's obligations under the Contract Documents with respect to CONTRACTOR's review and approval of that submittal.

6.25.3. At that time of each submission, CONTRACTOR shall give ENGINEER specific written notice of such variations, if any, that the Shop Drawing or Sample submitted may have from the requirements of the Contract Documents, such notice to be in a written communication separate from the submittal; and, in addition, shall cause a specific notation to be made on each Shop Drawing and Sample submitted to ENGINEER for review and approval of each such variation.

6.26. ENGINEER will review and approve Shop Drawings and Samples in accordance with the schedule of Shop Drawings and Sample submittals accepted by ENGINEER as required by paragraph 2.9. ENGINEER's review and approval will be only to determine if the items covered by the submittals will, after installation or incorporation in the Work, conform to the information given in the Contract Documents and be compatible with the design concept of the completed Project as a functioning whole as indicated by the Contract Documents. ENGINEER's review and approval will not extend to means, methods, techniques, sequences or procedures of construction (except where a particular means, method, technique, sequence or procedure of construction is specifically and expressly called for by the Contract Documents) or to safety precautions or programs incident thereto. The review and approval of a separate item as such will not indicate approval of the assembly in which the item functions. CONTRACTOR shall make corrections required by ENGINEER, and shall return the required number of corrected copies of Shop Drawings and submit as required new Samples for review and approval. CONTRACTOR shall direct specific attention in writing to revisions other than the corrections called for by ENGINEER on previous submittals.

6.27. ENGINEER's review and approval of Shop Drawings or Samples shall not relieve CONTRACTOR from responsibility for any variation from the requirements of the Contract Documents unless CONTRACTOR has in writing called ENGINEER's attention to each such variation at the time of submission as required by paragraph 6.25.3 and ENGINEER has given written approval of each such variation by specific written notation thereof incorporated in or accompanying the Shop Drawing or Sample approval; nor will any approval by ENGINEER relieve CONTRACTOR from responsibility for complying with the requirements of paragraph 6.25.1.

6.28. Where a Shop Drawing or Sample is required by the Contract Documents or the schedule of Shop Drawings and Sample submissions accepted by ENGINEER as required by paragraph 2.9, any related Work performed prior to ENGINEER's review and approval of the pertinent submittal will be at the sole expense and responsibility of CONTRACTOR.

Continuing the Work:

6.29. CONTRACTOR shall carry on the Work and adhere to the progress schedule during all disputes or disagreements with OWNER. No Work shall be delayed or postponed pending resolution of any disputes or disagreements, except as permitted by paragraph 15.5 or as OWNER and CONTRACTOR may otherwise agree in writing.

6.30. *CONTRACTOR's General Warranty and Guarantee:*

6.30.1 CONTRACTOR warrants and guarantees to OWNER, ENGINEER and ENGINEER's Consultants that all Work will be in accordance with the Contract Documents and will not be *defective.* CONTRACTOR's warranty and guarantee hereunder excludes defects or damage caused by:

6.30.1.1. abuse, modification or improper maintenance or operation by persons other than CONTRACTOR, Subcontractors or Suppliers; or

6.30.1.2. normal wear and tear under normal usage.

6.30.2. CONTRACTOR's obligation to perform and complete the Work in accordance with the Contract Documents shall be absolute. None of the following will constitute an acceptance of Work that is not in accordance with the Contract Documents or a release of CONTRACTOR's obligation to perform the Work in accordance with the Contract Documents:

6.30.2.1. observations by ENGINEER;

6.30.2.2. recommendation of any progress or final payment by ENGINEER;

6.30.2.3. the issuance of a certificate of Substantial Completion or any payment by OWNER to CONTRACTOR under the Contract Documents;

6.30.2.4. use or occupancy of the Work or any part thereof by OWNER;

6.30.2.5. any acceptance by OWNER or any failure to do so;

6.30.2.6. any review and approval of a Shop Drawing or Sample submittal or the issuance of a notice of acceptability by ENGINEER pursuant to paragraph 14.13;

6.30.2.7. any inspection, test or approval by others; or

6.30.2.8. any correction of *defective* Work by OWNER.

Indemnification:

6.31. To the fullest extent permitted by Laws and Regulations, CONTRACTOR shall indemnify and hold harmless OWNER, ENGINEER, ENGINEER's Consultants and the officers, directors, employees, agents and other consultants of each and any of them from and against all claims, costs, losses and damages (including but not limited to all fees and charges of engineers, architects, attorneys and other professionals and all court of arbitration or other dispute resolution costs) caused by, arising out of or resulting from the performance of the Work, provided that any such claim, cost, loss or damage: (i) is attributable to bodily injury, sickness, disease or death, or to injury to or destruction of tangible property (other than the Work itself), including the loss of use resulting therefrom, and (ii) is caused in whole or in part by any negligent act or omission of CONTRACTOR, and subcontractor, any Supplier, any person or organization directly or indirectly employed by any of them to perform or furnish any of the Work or anyone for whose acts any of them may be liable, regardless of whether or not caused in part by any negligence or omission of a person or entity indemnified hereunder or whether liability is imposed upon such indemnified party by Laws and Regulations regardless of the negligence of any such person or entity.

6.32. In any and all claims against OWNER or ENGINEER or any of their respective consultants, agents, officers, directors or employees by any employee (or the survivor or personal representative of such employee) of CONTRACTOR, any Subcontractor, any Supplier, any person or organization directly or indirectly employed by any of them to perform or furnish any of the Work, or anyone for whose acts any of them may be liable, the indemnification obligation under paragraph 6.31 shall not be limited in any way by any limitation on the amount or type of damages, compensation or benefits payable by or for CONTRACTOR or any such Subcontractor, Supplier or other person or organization under workers' compensation acts, disability benefit acts or other employee benefit acts.

6.33. The indemnification obligations of CONTRACTOR under paragraph 6.31 shall not extend to the liability of ENGINEER and ENGINEER's Consultants, officers, directors, employees or agents caused by the professional negligence, errors or omissions of any of them.

Survival of Obligations:

6.34. All representations, indemnification's, warranties and guarantees made in, required by or given in accordance with the Contract Documents, as well as all continuing obligations indicated in the Contract Documents, will survive final payment, completion and acceptance of the Work and termination or completion of the Agreement.

ARTICLE 7 - OTHER WORK

Related Work at Site:

7.1. OWNER may perform other work related to the Project at the site by OWNER's own forces, or let other direct contracts therefor which shall contain General Conditions similar to these, or have other work performed by utility owners. If the fact that such other work is to be performed was not noted in the Contract Documents, then: (i) written notice thereof will be given to CONTRACTOR prior to starting any such other work, and (ii) CONTRACTOR may make a claim therefor as provided in Articles 11 and 12 if CONTRACTOR believes that such performance will involve additional expense to CONTRACTOR or requires additional time and the parties are unable to agree as to the amount or extent thereof.

7.2. CONTRACTOR shall afford each other contractor who is a party to such a direct contract and each utility owner (and OWNER, if OWNER is performing the additional work with OWNER's employees) proper and safe access to the site and a reasonable opportunity for the introduction and storage of materials and equipment and the execution of such other work and shall properly connect and coordinate the Work with theirs. Unless otherwise provided in the Contract Documents, CONTRACTOR shall do all cutting, fitting and patching of the Work that may be required to make its several parts come together properly and integrate with such other work. CONTRACTOR shall not endanger any work others by cutting, excavating or otherwise altering their work and will only cut or alter their work with the written consent of ENGINEER and the others whose work will be affected. The duties and responsibilities of CONTRACTOR under this paragraph are for the benefit of such utility owners and other contractors to the extent that there are comparable provisions for the benefit of CONTRACTOR in said direct contracts between OWNER and such utility owners and other contractors.

7.3. If the proper execution or results of any part of CONTRACTOR's Work depends upon work performed by others under this Article 7, CONTRACTOR shall inspect such other work and promptly report to ENGINEER in writing any delays, defects or deficiencies in such other work that render it unavailable or unsuitable for the proper execution and results of CONTRACTOR's Work. CONTRACTOR's failure so to report will constitute an acceptance of such other work as fit and proper for integration with CONTRACTOR's Work except for latent or nonapparent defects and deficiencies in such other work.

Coordination:

7.4. If OWNER contracts with others for the performance of other work on the Project at the site, the following will be set forth in Supplementary Conditions:

7.4.1. the person, firm or corporation who will have authority and responsibility for coordination of the activities among the various prime contractors will be identified;

7.4.2. the specific matters to be covered by such authority and responsibility will be itemized; and

7.4.3. the extent of such authority and responsibilities will be provided.

Unless otherwise provided in Supplementary Conditions, OWNER shall have sole authority and responsibility in respect of such coordination.

ARTICLE 8 - OWNER'S RESPONSIBILITIES

8.1. Except as otherwise provided in these General Conditions, OWNER shall issue all communications to CONTRACTOR through ENGINEER.

8.2. In case of termination of the employment of ENGINEER, OWNER shall appoint an engineer against whom CONTRACTOR makes not reasonable objection, whose status under the Contract Documents shall be that of the former ENGINEER.

8.3. OWNER shall furnish the data required of OWNER under the Contract Documents promptly and shall make payments to CONTRACTOR promptly when they are due as provided in paragraphs 14.4 and 14.13.

8.4. OWNER's duties in respect of providing lands and easements and providing engineering surveys to establish reference points are set forth in paragraphs 4.1 and 4.4. Paragraph 4.2 refers to OWNER's identifying and making available to CONTRACTOR copies of reports of explorations and tests of subsurface conditions at the site and drawings of physical conditions in existing structures at or contiguous to the site that have been utilized by ENGINEER in preparing the Contract Documents.

8.5. OWNER's responsibilities in respect of purchasing and maintaining liability and property insurance are set forth in paragraphs 5.5 through 5.10.

8.6. OWNER is obligated to execute Change Orders as indicated in paragraph 10.4.

8.7. OWNER's responsibility in respect of certain inspections, tests and approvals is set forth in paragraph 13.4.

8.8. In connection with OWNER's rights to stop Work or suspend Work, see paragraphs 13.10 and 15.1. Paragraph 15.2 deals with OWNER's right to terminate services of CONTRACTOR under certain circumstances.

8.9. The OWNER shall not supervise, direct or have control or authority over, nor be responsible for, CONTRACTOR's means, methods, techniques, sequences or procedures of construction or the safety precautions and programs incident thereto, or for any failure of CONTRACTOR to comply with Laws and Regulations applicable to the furnishing or performance of the Work. OWNER will not be responsible for CONTRACTOR's failure to perform or furnish the Work in accordance with the Contract Documents.

8.10. OWNER's responsibility in respect of undisclosed Asbestos, PCBs, Petroleum, Hazardous Waste or Radioactive Materials uncovered or revealed at the site is set forth in paragraph 4.5.

8.11. If and to the extent OWNER has agreed to furnish CONTRACTOR reasonable evidence that financial arrangements have been made to satisfy OWNER's obligations under the Contract Documents, OWNER's responsibility in respect thereof will be as set forth in the Supplementary Conditions.

ARTICLE 9 - ENGINEER'S STATUS DURING CONSTRUCTION

OWNER's Representative:

9.1. ENGINEER will be OWNER's representative during the construction period. The duties and responsibilities and the limitations of authority of ENGINEER as OWNER's representative during construction are set forth in the Contract Documents and shall not be extended without written consent of OWNER and ENGINEER.

Visits to Site:

9.2. ENGINEER will make visits to the site at intervals appropriate to the various stages of construction as ENGINEER deems necessary in order to observe as an experienced and qualified design professional the progress that has been made and the quality of the various aspects of CONTRACTOR's executed Work. Based on information obtained during such visits and observations, ENGINEER will endeavor for the benefit of OWNER to determine, in general, if the Work is proceeding in

accordance with the Contract Documents. ENGINEER will not be required to make exhaustive or continuous on-site inspections to check the quality or quantity of the Work. ENGINEER's efforts will be directed toward providing for OWNER a greater degree of confidence that the completed Work will conform generally to the Contract Documents. On the basis of such visits and on-site observations, ENGINEER will keep OWNER informed of the progress of the Work and will endeavor to guard OWNER against *defective* Work. ENGINEER's visits and on-site observations are subject to all the limitations on ENGINEER's authority and responsibility set forth in paragraph 9.13, and particularly, but without limitation, during or as a result of ENGINEER's on-site visits or observations of CONTRACTOR's Work ENGINEER will not supervise, direct, control or have authority over or be responsible for CONTRACTOR's means, methods, techniques, sequences or procedures of construction, or the safety precautions and programs incident thereto, or for any failure of CONTRACTOR to comply with Laws and Regulations applicable to the furnishing or performance of the Work.

Project Representative:

9.3. If OWNER and ENGINEER agree, ENGINEER will furnish a Resident Project Representative to assist ENGINEER in providing more continuous observation of the Work. The responsibilities and authority and limitations thereon of any such Resident Project Representative and assistants will be as provided in paragraph 9.13 and in the Supplementary Conditions. If OWNER designates another representative or agent to represent OWNER at the site who is not ENGINEER's Consultant, agent, or employee, the responsibilities and authority and limitations thereon of such other person will be as provided in the Supplementary Conditions.

Clarifications and Interpretations:

9.4. ENGINEER will issue with reasonable promptness such written clarifications or interpretations of the requirements of the Contract Documents (in the form of Drawings or otherwise) as ENGINEER may determine necessary, which shall be consistent with the intent of and reasonable inferable from Contract Documents. Such written clarifications and interpretations will be binding on OWNER and CONTRACTOR. If OWNER or CONTRACTOR believes that a written clarification or interpretation justifies an adjustment in the Contract Price or the Contract Times and the parties are unable to agree to the amount or extent thereof, if any, OWNER or CONTRACTOR may make a written claim therefor as provided in Article 11 or Article 12.

Authorized Variations in Work:

9.5. ENGINEER may authorize minor variations in the Work from the requirements of the Contract Documents which do not involve an adjustment in the Contract Price or the Contract Times and are compatible with the design concept of the completed Project as a functioning whole as indicated by the Contract Documents. These may be accomplished by a Field Order and will be binding on OWNER and also on CONTRACTOR who shall perform the Work involved promptly. If OWNER or CONTRACTOR believes that a Field Order justifies an adjustment in the Contract Price or the Contract Times and the parties are unable to agree to the amount or extent thereof, OWNER or CONTRACTOR may make a written claim therefor as provided in Article 11 or 12.

Rejecting Defective Work:

9.6. ENGINEER will have authority to disapprove or reject Work which ENGINEER believes to be *defective*, or that ENGINEER believes will not produce a completed Project that conforms to the Contract Documents or that will prejudice the integrity of the design concept of the completed Project as a functioning whole as indicated by the Contract Documents. ENGINEER will also have authority to require special inspection or testing of the Work as provided in paragraph 13.9, whether or not the Work is fabricated, installed or completed.

Shop Drawings, Change Orders and Payments:

9.7. In connection with ENGINEER's authority as to Shop Drawings and Samples, see paragraphs 6.24 through 6.28 inclusive.

9.8. In connection with ENGINEER's authority as to Change Orders, See Articles 10, 11, and 12.

9.9. In connection with ENGINEER's authority as to Applications for Payment, See Article 14.

Determinations for Unit Prices:

9.10. ENGINEER will determine the actual quantities and classifications of Unit Price Work performed by CONTRACTOR. ENGINEER will review with CONTRACTOR the ENGINEER's preliminary determinations on such matters before rendering a written decision thereon (by recommendation of an Application for Payment or otherwise). ENGINEER's written decision thereon will be final and binding upon OWNER and CONTRACTOR, unless, within ten days after the date of any such decision, either OWNER or CONTRACTOR delivers to the other and to ENGINEER written notice of intention to appeal from ENGINEER's decision and: (i) an appeal from ENGINEER's decision is taken within the time limits and in accordance with the procedures set forth in Exhibit GC-A, "Dispute Resolution Agreement," entered into between OWNER and CONTRACTOR pursuant to Article 16, or (ii) if no such Dispute Resolution Agreement has been entered into, a formal proceeding is instituted by the appealing party in a forum of competent jurisdiction to exercise such rights or remedies as the appealing party may have with respect to ENGINEER's decision, unless otherwise agreed in writing by OWNER and CONTRACTOR. Such appeal will not be subject to the procedures of paragraph 9.11.

Decisions on Disputes:

9.11. ENGINEER will be the initial interpreter of the requirements of the Contract Documents and judge of the acceptability of the Work thereunder. Claims, disputes and other matters relating to the acceptability of the Work or the interpretation of the requirements of the Contract Documents pertaining to the performance and furnishing of the Work and Claims under Articles 11 and 12 in respect of changes in the Contract Price or Contract Times will be referred initially to ENGINEER in writing with a request for a formal decision in accordance with this paragraph. Written notice of each such claim, dispute or other matter will be delivered by the claimant to ENGINEER and the other party to the Agreement promptly (but in no event later than thirty days) after the start of the occurrence or event giving rise thereto, and written supporting data will be submitted to ENGINEER and the other party within sixty days after the start of such occurrence or event unless ENGINEER allows an additional period of time for the submission of additional or more accurate date in support of such claim, dispute or other matter. The opposing party shall submit any response to ENGINEER and the claimant within thirty days after receipt of the claimant's last submittal (unless ENGINNER allows additional time). ENGINEER will render a formal decision in writing within thirty days after receipt of the opposing party's submittal, if any, in accordance with this paragraph. ENGINEER's written decision on such claim, dispute or other matter will be final and binding upon OWNER and CONTRACTOR unless: (i) an appeal from ENGINEER's decision is taken within the time limits and in accordance with the procedures set forth in EXHIBIT GC-A, “Dispute Resolution Agreement," entered into between OWNER and CONTRACTOR pursuant to Article 16, or (ii) if no such Dispute Resolution Agreement has been entered into, a written notice of intention to appeal from ENGINEER's written decision is delivered by OWNER or CONTRACTOR to the other and to ENGINEER within thirty days after the date of such decision and a formal proceeding is instituted by the appealing party in a forum of competent jurisdiction to exercise

such rights or remedies as the appealing party may have with respect to such claim, dispute or other matter in accordance with applicable Laws and Regulations within sixty days of the date of such decision, unless otherwise agreed in writing by OWNER and CONTRACTOR.

9.12. When functioning as interpreter and judge under paragraphs 9.10 and 9.11, ENGINEER will not show partiality to OWNER or CONTRACTOR and will not be liable in connection with any interpretation or decision rendered in good faith in such capacity. The rendering of a decision by ENGINEER pursuant to paragraphs 9.10 or 9.11 with respect to any such claim, dispute or other matter (except any which have been waived by the making or acceptance of final payment as provided in paragraph 14.15) will be a condition precedent to any exercise by OWNER or CONTRACTOR of such rights or remedies as either may otherwise have under the Contract Documents or by Laws or Regulations in respect of any such claim, dispute or other matter pursuant to Article 16.

9.13. ***Limitations on ENGINEER's Authority and Responsibilities:***

9.13.1. Neither ENGINEER's authority or responsibility under this Article 9 or under any other provision of the Contract Documents nor any decision made by ENGNINEER in good faith either to exercise or not exercise such authority or responsibility or the undertaking, exercise or performance of any authority or responsibility by ENGINEER shall create, impose or give rise to any duty owed by ENGINEER to CONTRACTOR, any Subcontractor, any Supplier, any other person or organization, or to any surety for or employee or agent of any of them.

9.13.2. ENGINEER will not supervise, direct, control or have authority over or be responsible for CONTRACTOR's means, methods, techniques, sequences or procedures of construction, or the safety precautions and programs incident thereto, or for any failure of CONTRACTOR to comply with Laws and Regulations applicable to the furnishing or performance of the Work. ENGINEER will not be responsible for CONTRACTOR's failure to perform or furnish the Work in accordance with the Contract Documents.

9.13.3. ENGINEER will not be responsible for the acts or omissions of CONTRACTOR or of any Subcontractor, any Supplier, or of any other person or organization performing or furnishing any of the Work.

9.13.4. ENGINEER's review of the final Application for Payment and accompanying documentation and all maintenance and operating instructions, schedules, guarantees, bonds and certificates of inspection, tests and approvals and other documentation required to be delivered by paragraph 14.12 will only be to determine generally that their content complies with the requirements of, and in the case of certificates of inspections, tests and approvals that the results certified indicate compliance with, the Contract Documents.

9.13.5. The limitations upon authority and responsibility set forth in this paragraph 9.13 shall also apply to ENGINEER's Consultants, Resident Project Representative and assistants.

ARTICLE 10 - CHANGES IN THE WORK

10.1. Without invalidating the Agreement and without notice to any surety, OWNER may, at any time or from time to time, order additions, deletions or revisions in the Work. Such additions, deletions or revisions will be authorized by a Written Amendment, a Change Order, or a Work Change Directive. Upon receipt of any such document, CONTRACTOR shall promptly proceed with the Work involved which will be performed under the applicable conditions of the Contract Documents (except as otherwise specifically provided).

10.2. If OWNER and CONTRACTOR are unable to agree as to the extent, if any, of an adjustment in the Contract Price or an adjustment of the Contract Times that should be allowed as a result of a Work Change Directive, a claim may be made therefor as provided in Article 11 or Article 12.

10.3. CONTRACTOR shall not be entitled to an increase in the Contract Price or an extension of the Contract Times with respect to any Work performed that is not required by the Contract Documents as amended, modified and supplemented as provided in paragraphs 3.5 and 3.6 except in the case of an emergency as provided in paragraph 6.23 or in the case of uncovering Work as provided in paragraph 13.9.

10.4. OWNER and CONTRACTOR shall execute appropriate Change Orders recommended by ENGINEER (or Written Amendments) covering:

10.4.1. changes in the Work which are (i) ordered by OWNER pursuant to paragraph 10.1, (ii) required because of acceptance of *defective* Work under paragraph 13.13 or correcting *defective* Work under paragraph 13.14, or (iii) agreed to by the parties;

10.4.2. changes in the Contract Price or Contract Times which are agreed to by the parties; and

10.4.3. changes in the Contract Price or Contract Times which embody the substance of any written decision rendered by ENGINEER pursuant to paragraph 9.11;

provided that, in lieu of executing any such Change Order, an appeal may be taken from any such decision in accordance with the provisions of the Contract Documents and applicable Laws and Regulations, but during any such appeal, CONTRACTOR shall carry on the Work and adhere to the progress schedule as provided in paragraph 6.29.

10.5. If notice of any change affecting the general scope of the Work or the provisions of the Contract Documents (including, but not limited to, Contract Price or Contract Times) is required by the provisions of any Bond to be given to a surety, the giving of any such notice will be CONTRACTOR's responsibility, and the amount of each applicable Bond will be adjusted accordingly.

ARTICLE 11 - CHANGE OF CONTRACT PRICE

11.1. The Contract Price constitutes the total compensation (subject to authorized adjustments) payable to CONTRACTOR for performing the Work. All duties, responsibilities and obligations assigned to or undertaken by CONTRACTOR shall be at CONTRACTOR's expense without change in the Contract Price.

11.2. The Contract Price may only be changed by a Change Order or by a Written Amendment. Any claim for an adjustment in the Contract Price shall be based on written notice delivered by the party making the claim to the other party and to ENGINEER promptly (but in no event later than thirty days) after the start of the occurrence or event giving rise to the claim and stating the general nature of the claim. Notice of the amount of the claim with supporting data shall be delivered within sixty days after the start of such occurrence or event (unless ENGINEER allows additional time for claimant to submit additional or more accurate data in support of the claim) and shall be accompanied by claimant's written statement that the adjustment claimed covers all known amounts to which the claimant is entitled as a result of said

occurrence or event. All claims for adjustment in the Contract Price shall be determined by ENGINEER in accordance with paragraph 9.11 if OWNER and CONTRACTOR cannot otherwise agree on the amount involved. No claim for an adjustment in the Contract Price will be valid if not submitted in accordance with this paragraph 11.2.

11.3. The value of any Work covered by a Change Order or of any claim for an adjustment in the Contract Price will be determined as follows:

11.3.1. where the Work involved is covered by unit prices contained in the Contract Documents, by application of such unit prices to the quantities of the items involved (subject to the provisions of paragraphs 11.9.1 through 11.9.3, inclusive);

11.3.2. where the Work involved is not covered by unit prices contained in the Contract Documents, by a mutually agreed lump sum (which may include an allowance for overhead and profit not necessarily in accordance with paragraph 11.6.2);

11.3.3. where the Work involved is not covered by unit prices contained in the Contract Documents and agreement to a lump sum is not reached under paragraph 11.3.2, on the basis of the Cost of the Work (determined as provided in paragraphs 11.4 and 11.5) plus a CONTRACTOR's fee for overhead and profit (determined as provided in paragraph 11.6).

Cost of the Work:

11.4. The term Cost of the Work means the sum of all costs necessarily incurred and paid by CONTRACTOR in the proper performance of the Work. Except as otherwise may be agreed to in writing by OWNER, such costs shall be in amounts no higher than those prevailing in the locality of the Project, shall include only the following items and shall not include any of the costs itemized in paragraph 11.5:

11.4.1. Payroll costs for employees in the direct employ of CONTRACTOR in the performance of the Work under schedules of job classifications agreed upon by OWNER and CONTRACTOR. Such employees shall include without limitation superintendents, foremen and other personnel employed full-time at the site. Payroll costs for employees not employed full time on the Work shall be apportioned on the basis of their time spent on the Work. Payroll costs shall include, but not be limited to, salaries and wages plus the cost of fringe benefits which shall include social security contributions, unemployment, excise and payroll taxes, workers' compensation, health and retirement benefits, bonuses, sick leave, vacation and holiday pay applicable thereto. The expenses of performing Work after regular working hours, on Saturday, Sunday or legal holidays, shall be included in the above to the extent authorized by OWNER.

11.4.2. Cost of all materials and equipment furnished and incorporated in the Work, including costs of transportation and storage thereof, and Suppliers' field services required in connection therewith. All cash discounts shall accrue to CONTRACTOR unless OWNER deposits funds with CONTRACTOR with which to make payments, in which case the cash discounts shall accrue to OWNER. All trade discounts, rebates and refunds and returns from sale of surplus materials and equipment shall accrue to OWNER, and CONTRACTOR shall make provisions so that they may be obtained.

11.4.3. Payments made by CONTRACTOR to the Subcontractors for Work performed or furnished by Subcontractors. If required by OWNER, CONTRACTOR shall obtain competitive bids from subcontractors acceptable to OWNER and CONTRACTOR and shall deliver such bids to OWNER who will then determine, with the advice of ENGINEER, which bids, if any, will be accepted. If any subcontract provides that the Subcontractor is to be paid on the basis of Cost of the Work plus a fee, the Subcontractor's Cost of the Work and fee shall be determined in the same manner as CONTRACTOR's Cost of the Work and fee as provided in paragraphs 11.4, 11.5, 11.6, and 11.7. All subcontracts shall be subject to the other provisions of the Contract Documents insofar as applicable.

11.4.4. Costs of special consultants (including but not limited to engineers, architects, testing laboratories, surveyors, attorneys and accountants) employed for services specifically related to the Work.

11.4.5. Supplemental costs including the following:

11.4.5.1. The proportion of necessary transportation, travel and subsistence expenses of CONTRACTOR's employees incurred in discharge of duties connected with the Work.

11.4.5.2. Cost, including transportation and maintenance, of all materials, supplies, equipment, machinery, appliances, office and temporary facilities at the site and hand tools not owned by the workers, which are consumed in the performance of the Work, and cost less market value of such items used but not consumed which remain the property of CONTRACTOR.

11.4.5.3. Rentals of all construction equipment and machinery and the parts thereof whether rented from CONTRACTOR or others in accordance with rental agreements approved by OWNER with the advice of ENGINEER, and the costs of transportation, loading, unloading, installation, dismantling and removal thereof -- all in accordance with the terms of said rental agreements. The rental of such equipment, machinery or parts shall cease when the use thereof is no longer necessary for the Work.

11.4.5.4. Sales, consumer, use or similar taxes related to the Work, and for which CONTRACTOR is liable, imposed by Laws and Regulations.

11.4.5.5. Deposits lost for causes other than negligence of CONTRACTOR, any Subcontractor or anyone directly or indirectly employed by an of them or for whose acts any of them may be liable, and royalty payments and fees for whose acts any of them may be liable, and royalty payments and fees for permits and licenses.

11.4.5.6. Losses and damages (and related expenses) caused by damage to the Work, not compensated by insurance or otherwise, sustained by CONTRACTOR in connection with the performance and furnishing of the Work (except losses and damages within the deductible amounts of property insurance established by OWNER in accordance with paragraph 5.9), provided they have resulted from causes other than the negligence of CONTRACTOR, any Subcontractor, or anyone directly or indirectly employed by any of them or for whose acts any of them may be liable. Such losses shall include settlements made with the written consent and approval of OWNER. No such losses, damages and expenses shall be included in the Cost of the Work for the purpose of determining CONTRACTOR's fee. If, however, any such loss or damage requires reconstruction and CONTRACTOR is placed in charge thereof, CONTRACTOR shall be paid for services a fee proportionate to that stated in paragraph 11.6.2

11.4.5.7. The cost of utilities, fuel and sanitary facilities at the site.

11.4.5.8. Minor expenses such as telegrams, long distance telephone calls, telephone service at the site, expressage and similar petty cash items in connection with the Work.

11.4.5.9. Cost of premiums for additional Bonds and insurance required because of changes in the Work.

11.5. The term Cost of Work shall not include any of the following:

11.5.1. Payroll costs and other compensation of CONTRACTOR's officers, executives, principals (of partnership and sole proprietorships), general managers, engineers, architects, estimators, attorneys, auditors, accountants, purchasing and contracting agents, expediters, timekeepers, clerks and other personnel employed by CONTRACTOR whether at the site or in CONTRACTOR's principal or a branch office for general administration of the Work and not specifically included in the agreed upon schedule of job classifications referred to in paragraph 11.4.1 or specifically covered by paragraph 11.4. -- all of which are to be considered administrative costs covered by the CONTRACTOR's fee.

11.5.2. Expenses of CONTRACTOR's principal and branch offices other than CONTRACTOR's office at the site.

11.5.3. Any part of CONTRACTOR's capital expenses, including interest on CONTRACTOR's capital employed for the Work and charges against CONTRACTOR for delinquent payments.

11.5.4. Cost of premiums for all Bonds and for all insurance whether or not CONTRACTOR is required by the Contract Documents to purchase and maintain the same (except for the cost of premiums covered by subparagraph 11.4.5.9 above).

11.5.5. Costs due to the negligence of CONTRACTOR, any Subcontractor, or anyone directly or indirectly employed by any of them or for whose acts any of them may be liable, including but not limited to, the correction of *defective* Work, disposal of materials or equipment wrongly supplied and making good any damage to property.

Other overhead or general expense costs of any kind and the costs of any item not specifically and expressly included in paragraph 11.4.

11.6. The CONTRACTOR's fee allowed to CONTRACTOR for overhead and profit shall be determined as follows:

11.6.1. a mutually acceptable fixed fee; or

11.6.2. if a fixed fee is not agreed upon, then a fee based on the following percentages of the various portions of the Cost of the Work:

11.6.2.1. for costs incurred under paragraphs 11.4.1 and 11.4.2, the CONTRACTOR's fee shall be fifteen percent;

11.6.2.2. for costs incurred under paragraph 11.4.3, the CONTRACTOR's fee shall be five percent;

11.6.2.3. where one or more tiers of subcontractors are on the basis of Cost of the Work plus a fee and no fixed fee is agreed upon, the intent of paragraphs 11.4.1, 11.4.2, 11.4.3 and 11.6.2 is that the Subcontractor who actually performs or furnishes the Work, at whatever tier, will be paid a fee of fifteen percent of the costs incurred by such Subcontractor under paragraphs 11.4.1 and 11.4.2 and that any higher tier Subcontractor and CONTRACTOR will each be paid a fee of five percent of the amount paid to the next lower tier Subcontractor;

11.6.2.4. no fee shall be payable on the basis of costs itemized under paragraphs 11.4.4, 11.4.5, and 11.5;

11.6.2.5. the amount of credit to be allowed by CONTRACTOR to OWNER for any change which results in a net decrease in cost will be the amount of the actual net decrease in cost plus a deduction in CONTRACTOR's fee by an amount equal to five percent of such net decrease; and

11.6.2.6. when both additions and credits are involved in any on change, the adjustment in CONTRACTOR's fee shall be computed on the basis of the net change in accordance with paragraphs 11.6.2.1 through 11.6.2.5, inclusive.

11.7. Whenever the cost of any Work is to be determined pursuant to paragraphs 11.4 and 11.5, CONTRACTOR will establish and maintain records thereof in accordance with generally accepted accounting practices and submit in form acceptable to ENGINEER an itemized cost breakdown together with supporting data.

Cash Allowances:

11.8. It is understood that CONTRACTOR has included in the Contract Price all allowances so named in the Contract Documents and shall cause the Work so covered to be furnished and performed for such sums as may be acceptable to OWNER and ENGINEER. CONTRACTOR agrees that:

11.8.1. the allowances include the cost to CONTRACTOR (less any applicable trade discounts) of materials and equipment required by the allowances to be delivered at the site, and all applicable taxes; and

11.8.2. CONTRACTOR's costs for unloading and handling on the site, labor, installation costs, overhead, profit and other expenses contemplated for the allowances have been included in the Contract Price and not in the allowances and no demand for additional payment on account of any of the foregoing will be valid.

Prior to final payment, an appropriate Change Order will be issued as recommended by ENGINEER to reflect actual amounts due CONTRACTOR on account of Work covered by allowances, and the Contract Price shall be correspondingly adjusted.

11.9. ***Unit Price Work:***

11.9.1. Where the Contract Documents provide that all or part of the Work is to be Unit Price Work, initially the Contract Price will be deemed to include for all Unit Price Work an amount equal to the sum of the established unit price for each separately identified item of Unit Price Work times the estimated quantity of each item as indicated in the Agreement. The estimated quantities of items of Unit Price Work are not guaranteed and are solely for the purpose of comparison of Bids and determining an initial Contract Price. Determinations of the actual quantities and classifications of Unit Price Work performed by CONTRACTOR will be made by ENGINEER in accordance with paragraph 9.10.

11.9.2. Each unit price will be deemed to include an amount considered by CONTRACTOR to be adequate to cover CONTRACTOR's overhead and profit for each separately identified item.

~~11.9.3 Owner or Contractor may make a claim for an adjustment in the Contract Price in accordance with Article 11 if:~~

~~11.9.3.1 the quantity of any item of Unit Price Work performed by CONTRACTOR differs materially and~~

~~significantly from the estimated quantity of such item indicated in the Agreement; and~~

~~11.9.3.2 there is no corresponding adjustment with respect to any other item of Work; and~~

~~11.9.3.3 if CONTRACTOR believes that CONTRACTOR is entitled to an increase in Contract Price as a result of having incurred additional expense or OWNER believes that OWNER is entitled to a decrease in Contract Price and the parties are unable to agree as to the amount of any such increase or decrease.~~

SEE SUPPLEMENTARY CONDITIONS

ARTICLE 12 -- CHANGE OF CONTRACT TIMES

12.1. The Contract Times (or Milestones) may only be changed by a Change Order or a Written Amendment. Any claim for an adjustment of the Contract Times (or Milestones) shall be based on written notice delivered by the party making the claim to the other party and to ENGINEER promptly (but in no event later than thirty days) after the occurrence of the event giving rise to the claim and stating the general nature of the claim. Notice of the extent of the claim with supporting data shall be delivered within sixty days after such occurrence (unless ENGINEER allows an additional period of time to ascertain more accurate data in support of the claim) and shall be accompanied by the claimant's written statement that the adjustment claimed is the entire adjustment to which the claimant has reason to believe it is entitled as a result of the occurrence of said event. All claims for adjustment in the Contract Times (or Milestones) shall be determined by ENGINEER in accordance with paragraph 9.11 if OWNER and CONTRACTOR cannot otherwise agree. No claim for an adjustment in the Contract Times (or Milestones) will be valid if not submitted in accordance with the requirements of this paragraph 12.1.

12.2. All time limits stated in the Contract Documents are of the essence of the Agreement.

12.3. Where CONTRACTOR is prevented from completing any part of the Work within the Contract Times (or Milestones) due to delay beyond the control of CONTRACTOR, the Contract Times (or Milestones) will be extended in an amount equal to the time lost due to such delay if a claim is made therefor as provided in paragraph 12.1. Delays beyond the control of CONTRACTOR shall include, but not be limited to, acts or neglect by OWNER, acts or neglect of utility owners or other contractors performing other work as contemplated by Article 7, fires, floods, epidemics, abnormal weather conditions or acts of God. Delays attributable to and within the control of a Subcontractor or Supplier shall be deemed to be delays within the control of CONTRACTOR.

12.4. Where CONTRACTOR is prevented from completing any part of the Work within the Contract Times (or Milestones) due to delay beyond the control of both OWNER and CONTRACTOR, an extension of the Contract Times (or Milestones) in an amount equal to the time lost due to such delay shall be CONTRACTOR's sole and exclusive remedy for such delay. In no event shall OWNER be liable to CONTRACTOR, any Subcontractor, and Supplier, any other person or organization, or to any surety for or employee or agent of any of them, for damages arising out of or resulting from (i) delays caused by or within the control of CONTRACTOR, or (ii) delays beyond the control of both parties including but not limited to fires, floods, epidemics, abnormal weather conditions, acts of God or acts or neglect by utility owners or other contractors performing other work as contemplated by Article 7.

ARTICLE 13 - TESTS AND INSPECTIONS; CORRECTION, REMOVAL OR ACCEPTANCE OF *DEFECTIVE* WORK

13.1. *Notice of Defects:* Prompt notice of all *defective* Work of which OWNER or ENGINEER have actual knowledge will be given to CONTRACTOR. All *defective* Work may be rejected, corrected or accepted as provided in this Article 13.

Access to Work:

13.2. OWNER, ENGINEER, ENGINEER's Consultant's, other representatives and personnel of OWNER, independent testing laboratories and governmental agencies with jurisdictional interests will have access to the Work at reasonable times for their observation, inspecting, and testing. CONTRACTOR shall provide them proper and safe conditions for such access and advise them of CONTRACTOR's site safety procedures and programs so that they may comply therewith as applicable.

Tests and Inspections:

13.3. CONTRACTOR shall give ENGINEER timely notice of readiness of the Work for all required inspections, tests or approvals, and shall cooperate with inspection and testing personnel to facilitate required inspections or tests.

13.4. OWNER shall employ and pay for all services of an independent testing laboratory to perform all inspections, tests, or approvals required by the Contract Documents except:

13.4.1. for inspections, tests or approvals covered by paragraph 13.5 below;

13.4.2. that costs incurred in connection with tests or inspections conducted pursuant to paragraph 13.9 below shall be paid as provided in said paragraph 13.9; and

13.4.3. as otherwise specifically provided in the Contract Documents.

13.5. If Laws and Regulations of any public body having jurisdiction require any Work (or part thereof) specifically to be inspected, tested or approved by an employee or other representative of such public body, CONTRACTOR shall assume full responsibility for arranging and obtaining such inspections, tests or approvals, pay all costs in connection therewith, and furnish ENGINEER the required certificates of inspection, or approval. CONTRACTOR shall also be responsible for arranging and obtaining and shall pay all costs in connection with any inspections, tests or approvals required for OWNER's and ENGINEER's acceptance of materials or equipment to be incorporated in the Work, or of materials, mix designs, or equipment submitted for approval prior to CONTRACTOR's purchase thereof for incorporation in the Work.

13.6. If any Work (or the work of others) that is to be inspected, tested or approved is covered by CONTRACTOR without written concurrence of ENGINEER, it must, if requested by ENGINEER, be uncovered for observation.

13.7. Uncovering Work as provided in paragraph 13.6 shall be at CONTRACTOR's expense unless CONTRACTOR has given ENGINEER timely notice of CONTRACTOR's intention to cover the same and ENGINEER has not acted with reasonable promptness in response to such notice.

Uncovering Work:

13.8. If any Work is covered contrary to the written request of ENGINEER, it must, if requested by ENGINEER, be uncovered for ENGINEER's observation and replaced at CONTRACTOR's expense.

13.9. If ENGINEER considers it necessary or advisable that covered Work be observed by ENGINEER or inspected or tested by others, CONTRACTOR, at ENGINEER's request, shall uncover, expose or otherwise make available for observation, inspection or testing as ENGINEER may require, that portion of the Work in question, furnishing all necessary labor, material and equipment. If it is found that such Work is *defective*, CONTRACTOR shall pay all claims, costs, losses and damages caused by, arising out of or resulting from such uncovering, exposure, observation, inspection and testing and of satisfactory replacement or reconstruction (including but not limited to all costs of repair or replacement of work of others); and OWNER shall be entitled to an appropriate decrease in the Contract Price, and, if the parties are unable to agree as to the amount thereof, may make a claim therefor as provided in Article 11. If, however, such Work is not found to be *defective*, CONTRACTOR shall be allowed an increase in the Contract Price or an extension of the Contract Times (or Milestones), or both, directly attributable to such uncovering, exposure, observation, inspection, testing, replacement and reconstruction; and, if the parties are unable to agree as to the amount or extent thereof, CONTRACTOR may make a claim therefor as provided in Articles 11 and 12.

OWNER May Stop the Work:

13.10. If the Work is *defective*, or CONTRACTOR fails to supply sufficient skilled workers or suitable materials or equipment, or fails to furnish or perform the Work in such a way that the completed Work will conform to the Contract Documents, OWNER may order CONTRACTOR to stop the Work, or any portion thereof, until the cause for such order has been eliminated; however, this right of OWNER to stop the Work shall not give rise to any duty on the part of OWNER to exercise this right for the benefit of CONTRACTOR or any surety or other party.

Correction or Removal of Defective Work:

13.11. If required by ENGINEER, CONTRACTOR shall promptly, as directed, either correct all *defective* Work, whether or not fabricated, installed or completed, or, if the Work has been rejected by ENGINEER, remove it from the site and replace it with Work that is not *defective*. CONTRACTOR shall pay all claims, costs, losses and damages caused by or resulting from such correction or removal (including but not limited to all costs of repair or replacement of work of others).

13.12. ***Correction Period:***

13.12.1. If within one year after the date of Substantial Completion or such longer period of time as may be prescribed by Laws or Regulations or by the terms of any applicable special guarantee required by the Contract Documents or by any specific provision of the Contract Documents, any Work is found to be *defective*, CONTRACTOR shall promptly, without cost to OWNER and in accordance with OWNER's written instructions: (i) correct such *defective* Work, or, if it has been rejected by OWNER, remove it from the site and replace it with Work that is not *defective*, and (ii) satisfactorily correct or remove and replace any damage to other Work or the work of others resulting therefrom. If CONTRACTOR does not promptly comply with the terms of such instructions, or in an emergency where delay would cause serious risk of loss or damage, OWNER may have the *defective* Work corrected or the rejected Work removed and replaced, and all claims, costs, losses and damages caused by or resulting from such removal and replacement (including but not limited to all costs of repair or replacement of work of others) will be paid by CONTRACTOR.

13.12.2. In special circumstances where a particular item of equipment is placed in continuous service before Substantial Completion of all the Work, the correction period for that item may start to run from an earlier date if so provided in the Specifications or by Written Amendment.

13.12.3. Where *defective* Work (and damage to other Work resulting therefrom) has been corrected, removed, or replaced under this paragraph 13.12, the correction period hereunder with respect to such Work will be extended for an additional period of one year after such correction or removal and replacement has been satisfactorily completed.

Acceptance of Defective Work:

13.13. If, instead of requiring correction or removal and replacement of *defective* Work, OWNER (and, prior to ENGINEER's recommendation of final payment, also ENGINEER) prefers to accept it, OWNER may do so. CONTRACTOR shall pay all claims, costs, losses and damages attributable to OWNER's evaluation of and determination to accept such *defective* Work (such costs to be approved by ENGINEER as to reasonableness). If any such acceptance occurs prior to ENGINEER's recommendation of final payment, a Change Order will be issued incorporating the necessary revisions in the Contract Documents with respect to the Work; and OWNER shall be entitled to an appropriate decrease in the Contract Price, and, if the parties are unable to agree as to the amount thereof, OWNER may make a claim therefor as provided in Article 11. If the acceptance occurs after such recommendation, an appropriate amount will be paid by CONTRACTOR to OWNER.

OWNER May Correct Defective Work:

13.14. If CONTRACTOR fails within a reasonable time after written notice from ENGINEER to correct *defective* Work or to remove and replace rejected Work as required by ENGINEER in accordance with paragraph 13.11, or if CONTRACTOR fails to perform the Work in accordance with the Contract Documents, or if CONTRACTOR fails to comply with any other provision of the Contract Documents, OWNER may, after seven days' written notice to CONTRACTOR, correct and remedy any such deficiency. In exercising the rights and remedies under this paragraph OWNER shall proceed expeditiously. In connection with such corrective and remedial action, OWNER may exclude CONTRACTOR from all or part of the site, take possession of all or part of the Work, and suspend CONTRACTOR's services related thereto, take possession of CONTRACTOR's tools, appliances, construction equipment and machinery at the site and incorporate in the Work all materials and equipment stored at the site or for which OWNER has paid CONTRACTOR but which are stored elsewhere. CONTRACTOR shall allow OWNER, OWNER's representatives, agents and employees, OWNER's other contractors and ENGINEER and ENGINEER's Consultants access to the site to enable OWNER to exercise the rights and remedies under this paragraph. All claims, costs, losses and damages incurred or sustained by OWNER in exercising such rights and remedies will be charged against CONTRACTOR and a Change Order will be issued incorporating the necessary revisions in the Contract Documents with respect to the Work; and OWNER shall be entitled to an appropriate decrease in the Contract Price, and, if the parties are unable to agree as to the amount thereof, OWNER may make a claim therefor as provided in Article 11. Such claims, costs, losses and damages will include but not be limited to all costs of repair or replacement of work of others destroyed or damaged by correction, removal or replacement of CONTRACTOR's *defective* Work. CONTRACTOR shall not be allowed an extension of the Contract Times (or Milestones) because of any delay in the performance of the Work attributable to the exercise by OWNER of OWNER's rights and remedies hereunder.

ARTICLE 14 -- PAYMENTS TO CONTRACTOR AND COMPLETION

Schedule of Values:

14.1. The schedule of values established as provided in paragraph 2.9 will serve as the basis for progress payments and will be incorporated into a form of Application for Payment acceptable to ENGINEER. Progress payments on account of Unit Price Work will be based on the number of units completed.

Application for Progress Payment:

14.2. At least twenty days before the date established for each progress payment (but not more often than once a month), CONTRACTOR shall submit to ENGINEER for review an Application for Payment filled out and signed by CONTRACTOR covering the Work completed as of the date of the Application and accompanied by such supporting documentation as is required by the Contract Documents. If payment is requested on the basis of materials and equipment not incorporated in the Work but delivered and suitably stored at the site or at another location agreed to in writing, the Application for Payment shall also be accompanied by a bill of sale, invoice or other documentation warranting that OWNER has received the materials and equipment free and clear of all Liens and evidence that the materials and equipment are covered by appropriate property insurance and other arrangements to protect OWNER's interest therein, all of which will be satisfactory to OWNER. The amount of retainage with respect to progress payments will be as stipulated in the Agreement.

CONTRACTOR's Warranty of Title:

14.3. CONTRACTOR warrants and guarantees that title to all Work, materials and equipment covered by an Application for Payment, whether incorporated in the Project or not, will pass to OWNER no later than the time of payment free and clear of all Liens.

Review of Applications for Progress Payment:

14.4. ENGINEER will, within ten days after receipt of each Application for Payment, either indicate in writing a recommendation of payment and present the Application to OWNER, or return the Application to CONTRACTOR indicating in writing ENGINEER's reasons for refusing to recommend payment. In the latter case, CONTRACTOR may make the necessary corrections and resubmit the Application. Ten days after presentation of the Application for Payment to OWNER with ENGINEER's recommendation, the amount recommended will (subject to the provisions of the last sentence of paragraph 14.7) become due and when due will be paid by OWNER to CONTRACTOR.

14.5. ENGINEER' s recommendation of any payment requested in an Application for Payment will constitute a representation by ENGINEER to OWNER, based on ENGINEER's on-site observations of the executed Work as an experienced and qualified design professional and on ENGINEER's review of the Application for Payment and the accompanying data and schedules, that to the best of ENGINEER's knowledge, information and belief:

14.5.1. the Work has progressed to the point indicated,

14.5.2. the quality of the Work is generally in accordance with the Contract Documents (subject to an evaluation of the Work as a functioning whole prior to or upon Substantial Completion, to the results of any subsequent tests called for in the Contract Documents, to a final determination of quantities and classifications for Unit Price Work under paragraph 9.10, and to any other qualifications stated in the recommendation), and

14.5.3. the conditions precedent to CONTRACTOR's being entitled to such payment appear to have been fulfilled in so far as it is ENGINEER's responsibility to observe the Work.

However, by recommending any such payment ENGINEER will not thereby be deemed to have represented that: (i) exhaustive or continuous on-site inspections have been made to check the quality or the quantity of the Work beyond the responsibilities specifically assigned to ENGINEER in the Contract Documents or (ii) that there may not be other matters or issues between the parties that might entitle CONTRACTOR to be paid additionally by OWNER or entitle OWNER to withhold payment to CONTRACTOR.

14.6. ENGINEER's recommendation of any payment, including final payment, shall not mean that ENGINEER is responsible for CONTRACTOR's means, methods, techniques, sequences or procedures of construction, or the safety precautions and programs incident thereto, or for any failure of CONTRACTOR to comply with Laws and Regulations applicable to the furnishing or performance of Work, or for any failure of CONTRACTOR to perform or furnish Work in accordance with the Contract Documents.

14.7. ENGINEER may refuse to recommend the whole or any part of any payment if, in ENGINEER's opinion, it would be incorrect to make the representations to OWNER referred to in paragraph 14.5. ENGINEER may also refuse to recommend any such payment, or, because of subsequently discovered evidence or the results of subsequent inspections or tests, nullify any such payment previously recommended, to such extent as may be necessary in ENGINEER's opinion to protect OWNER from loss because:

14.7.1. the Work is *defective*, or completed Work has been damaged requiring correction or replacement;

14.7.2. the Contract Price has been reduced by Written Amendment or Change Order,

14.7.3. OWNER has been required to correct *defective* Work or complete Work in accordance with paragraph 13.14, or

14.7.4. ENGINEER has actual knowledge of the occurrence of any of the events enumerated in paragraphs 15.2.1 through 15.2.4 inclusive.

OWNER may refuse to make payment of the full amount recommended by ENGINEER because:

14.7.5. claims have been made against OWNER on account of CONTRACTOR's performance or furnishing of the Work,

14.7.6. Liens have been filed in connection with the Work, except where CONTRACTOR has delivered a specific Bond satisfactory to OWNER to secure the satisfaction and discharge of such Liens,

14.7.7. there are other items entitling OWNER to a set-off against the amount recommended, or

14.7.8. OWNER has actual knowledge of the occurrence of any of the events enumerated in paragraphs 14.7.1 through 14.7.3 or paragraphs 15.2.1 through 15.2.4 inclusive;

but OWNER must give CONTRACTOR immediate written notice (with a copy to ENGINEER) stating the reasons for such action and promptly pay CONTRACTOR the amount so withheld, or any adjustment thereto agreed to by OWNER and CONTRACTOR, when CONTRACTOR corrects to OWNER's satisfaction the reasons for such action.

Substantial Completion:

14.8. When CONTRACTOR considers the entire Work ready for its intended use CONTRACTOR shall notify OWNER and ENGINEER in writing that the entire Work is substantially complete (except for items specifically listed by CONTRACTOR as incomplete) and request that ENGINEER issue a certificate of Substantial Completion. Within a reasonable time thereafter, OWNER, CONTRACTOR and ENGINEER shall make an inspection of the Work to determine the status of completion. If ENGINEER does not consider the Work substantially complete, ENGINEER will notify CONTRACTOR in writing giving the reasons therefor. If ENGINEER considers the Work substantially

complete, ENGINEER will prepare and deliver to OWNER a tentative certificate of Substantial Completion which shall fix the date of Substantial Completion. There shall be attached to the certificate a tentative list of items to be complete or corrected before final payment. OWNER shall have seven days after receipt of the tentative certificate during which to make written objection to ENGINEER as to any provisions of the certificate or attached list. If, after considering such objections, ENGINEER concludes that the Work is not substantially complete, ENGINEER will within fourteen days after submission of the tentative certificate to OWNER notify CONTRACTOR in writing, stating the reasons therefor. If, after consideration of OWNER's objections, ENGINEER considers the Work substantially complete, ENGINEER will within said fourteen days execute and deliver to OWNER and CONTRACTOR a definitive certificate of Substantial Completion (with a revised tentative list of items to be completed or corrected) reflecting such changes from the tentative certificate as ENGINEER believes justified after consideration of any objections from OWNER. At the time of delivery of the tentative certificate of Substantial Completion ENGINEER will deliver to OWNER and CONTRACTOR a written recommendation as to division of responsibilities pending final payment between OWNER and CONTRACTOR with respect to security, operation, safety, maintenance, heat, utilities, insurance and warranties and guarantees. Unless OWNER and CONTRACTOR agree otherwise in writing and so inform ENGINEER in writing prior to ENGINEER's issuing the definitive certificate of Substantial Completion, ENGINEER's aforesaid recommendation will be binding on OWNER and CONTRACTOR until final payment.

14.9. OWNER shall have the right to exclude CONTRACTOR from the Work after the date of Substantial completion, but OWNER shall allow CONTRACTOR reasonable access to complete or correct items on the tentative list.

Partial Utilization:

14.10. Use by OWNER at OWNER's option of any substantially completed part of the Work which: (i) has specifically been identified in the Contract Documents, or (ii) OWNER, ENGINEER and CONTRACTOR agree constitutes a separately functioning and usable part of the Work that can be used by OWNER for its intended purpose without significant interference with CONTRACTOR's performance of the remainder of the Work, may be accomplished prior to Substantial Completion of all the Work subject to the following:

14.10.1. OWNER at any time may request CONTRACTOR in writing to permit OWNER to use any such part of the Work which OWNER believes to be ready for its intended use and substantially complete. If CONTRACTOR agrees that such part of the Work is substantially complete, CONTRACTOR will certify to OWNER and ENGINEER that such part of the Work is substantially complete and request ENGINEER to issue a certificate of Substantial Completion for that part of the Work. CONTRACTOR at any time may notify OWNER and ENGINEER in writing that CONTRACTOR considers any such part of the Work ready for its intended use and substantially complete and request ENGINEER to issue a certificate of Substantial Completion for that part of the Work. Within a reasonable time after either such request, OWNER, CONTRACTOR and ENGINEER shall make an inspection of that part of the Work to determine its status of completion. If ENGINEER does not consider that part of the Work to be substantially complete, ENGINEER will notify OWNER and CONTRACTOR in writing giving the reasons therefor. If ENGINEER does not consider that part of the Work to be substantially complete, the provisions of paragraphs 14.8 and 14.9 will apply with respect to certification of Substantial Completion of that part of the Work and the division of responsibility in respect thereof and access thereto.

14.10.2. No occupancy or separate operation of part of the Work will be accomplished prior to compliance with the requirements of paragraph 5.15 in respect of property insurance.

Final Inspection:

14.11. Upon written notice from CONTRACTOR that the entire Work or an agreed portion thereof is complete, ENGINEER will make a final inspection with OWNER and CONTRACTOR and will notify CONTRACTOR in writing of all particulars in which this inspection reveals that the Work is incomplete or *defective*. CONTRACTOR shall immediately take such measures as are necessary to complete such Work or remedy such deficiencies.

Final Application for Payment:

14.12. After CONTRACTOR has completed all such corrections to the satisfaction of ENGINEER and delivered in accordance with the Contract Documents all maintenance and operating instructions, schedules, guarantees, Bonds, certificates or other evidence of insurance required by paragraph 5.4, certificates of inspection, marked-up record documents (as provided in paragraph 6.19) and other documents, CONTRACTOR may make application for final payment following the procedure for progress payments. The final Application for Payment shall be accompanied (except as previously delivered) by: (i) all documentation called for in the Contract Documents, including but not limited to the evidence of insurance required by subparagraph 5.4.13, (ii) consent of the surety, if any, to final payment, and (iii) complete and legally effective releases or waivers (satisfactory to OWNER) of all Liens arising out of or filed in connection with the Work. In lieu of such releases or waivers of Liens and as approved by OWNER, CONTRACTOR may furnish receipts or releases in full and an affidavit of CONTRACTOR that: (i) the releases and receipts include all labor, services, material and equipment for which a Lien could be filed, and (ii) all payrolls, material and equipment bills and other indebtedness connected with the Work for which OWNER or OWNER's property might in any way be responsible have been paid or otherwise satisfied. If any Subcontractor or Supplier fails to furnish such a release or receipt in full, CONTRACTOR may furnish a Bond or other collateral satisfactory to OWNER to indemnify OWNER against any Lien.

Final Payment and Acceptance:

14.13. If, on the basis of ENGINEER's observation of the Work during construction and final inspection, and ENGINEER's review of the final Application for Payment and accompanying documentation as required by the Contract Documents, ENGINEER is satisfied that the Work has been completed and CONTRACTOR's other obligations under the Contract Documents have been fulfilled, ENGINEER will, within ten days after receipt of the final Application for Payment, indicate in writing ENGINEER's recommendation of payment and present the Application to OWNER for payment. At the same time ENGINEER will also give written notice to OWNER and CONTRACTOR that the Work is acceptable subject to the provisions of paragraph 14.15. Otherwise, ENGINEER will return the Application to CONTRACTOR, indicating in writing the reasons for refusing to recommend final payment, in which case CONTRACTOR shall make the necessary corrections and resubmit the Application. Thirty days after the presentation to OWNER of the Application and accompanying documentation, in appropriate form and substance and with ENGINEER's recommendation and notice of acceptability, the amount recommended by ENGINEER will become due and will be paid by OWNER to CONTRACTOR.

14.14. If, through no fault of CONTRACTOR, final completion of the Work is significantly delayed and if ENGINEER so confirms, OWNER shall, upon receipt of CONTRACTOR's final Application for Payment and recommendation of ENGINEER, and without terminating the Agreement, make payment of the balance due for that portion of the Work fully completed and accepted. If the remaining balance to be held by OWNER for Work not fully completed or corrected is less than the retainage stipulated in the Agreement, and if Bonds have been furnished as required in paragraph 5.1, the written consent of the surety to the payment of the balance due for that portion of the Work fully completed and accepted shall be submitted by CONTRACTOR to ENGINEER with the Application for such payment. Such payment shall be made under the terms and conditions governing final payment, except that it shall not constitute a waiver of claims.

Waiver of Claims:

14.15. The making and acceptance of final payment will constitute:

14.15.1. a waiver of all claims by OWNER against CONTRACTOR, except claims arising from unsettled Liens, from *defective* Work appearing after final inspection pursuant to paragraph 14.11, from failure to comply with the Contract Documents or the terms of any special guarantees specified therein, or from CONTRACTOR's continuing obligations under the Contract Documents; and

14.15.2. a waiver of all claims by CONTRACTOR against OWNER other than those previously made in writing and still unsettled.

ARTICLE 15 -- SUSPENSION OF WORK AND TERMINATION

OWNER May Suspend Work:

15.1. At any time and without cause, OWNER may suspend the Work or any portion thereof for a period of not more than ninety days by notice in writing to CONTRACTOR and ENGINEER which will fix the date on which Work will be resumed. CONTRACTOR shall resume the Work on the date so fixed. CONTRACTOR shall be allowed an adjustment in the Contract Price or an extension of the Contract Times, or both, directly attributable to any such suspension if CONTRACTOR makes an approved claim therefor as provided in Articles 11 and 12.

OWNER May Terminate:

15.2. Upon the occurrence of any one or more of the following events:

15.2.1. if CONTRACTOR persistently fails to perform the Work in accordance with the Contract Documents (including, but not limited to, failure to supply sufficient skilled workers or suitable materials or equipment or failure to adhere to the progress schedule established under paragraph 2.9 as adjusted from time to time pursuant to paragraph 6.6);

15.2.2. if CONTRACTOR disregards Laws or Regulations of any public body have jurisdiction;

15.2.3. if CONTRACTOR disregards the authority of ENGINEER; or

15.2.4. if CONTRACTOR otherwise violates in any substantial way any provisions of the Contract Documents;

OWNER may, after giving CONTRACTOR (and the surety, if any,) seven days' written notice and to the extent permitted by Laws and Regulations, terminate the services of CONTRACTOR, exclude CONTRACTOR from the site and take possession of the Work and of all CONTRACTOR's tools, appliances, construction equipment and machinery at the site and use the same to the full extent they could be used by CONTRACTOR (without liability to CONTRACTOR for trespass or conversion), incorporate in the Work all materials and equipment stored at the site or for which OWNER has paid CONTRACTOR but which are stored elsewhere, and finish the Work as OWNER may deem expedient. In such case CONTRACTOR shall not be entitled to receive any further payment until the Work is finished. If the unpaid balance of the Contract Price exceeds all claims, costs, losses and damages sustained by OWNER arising out of or resulting from completing the Work such excess will be paid to CONTRACTOR. If such claims, costs, losses and damages exceed such unpaid balance, CONTRACTOR shall pay the difference to OWNER. Such claims, costs, losses and damages incurred by OWNER will be reviewed by ENGINEER as to their reasonableness and when so approved by ENGINEER incorporated in a Change Order, provided that when exercising any rights or remedies under this paragraph OWNER shall not be required to obtain the lowest price for the Work performed.

15.3. Where CONTRACTOR's services have been so terminated by OWNER, the termination will not affect any rights or remedies of OWNER against CONTRACTOR then existing or which may thereafter accrue. Any retention or payment of moneys due CONTRACTOR by OWNER will not release CONTRACTOR from liability.

15.4. Upon seven days' written notice to CONTRACTOR and ENGINEER, OWNER may, without cause and without prejudice to any other right or remedy of OWNER, elect to terminate the Agreement. In such case, CONTRACTOR shall be paid (without duplication of any items):

15.4.1. for completed and acceptable Work executed in accordance with the Contract Documents prior to the effective date of termination, including fair and reasonable sums for overhead and profit on such Work;

15.4.2. for expenses sustained prior to the effective date of termination in performing services and furnishing labor, materials or equipment as required by the Contract Documents in connection with uncompleted Work, plus fair and reasonable sums for overhead and profit on such expenses;

15.4.3. for all claims, costs, losses and damages incurred in settlement of terminated contracts with Subcontractors, Suppliers and others; and

15.4.4. for reasonable expenses directly attributable to termination.

CONTRACTOR shall not be paid on account of loss of anticipated profits or revenue or other economic loss arising out of or resulting from such termination.

CONTRACTOR May Stop Work or Terminate:

15.5. If, through no act or fault of CONTRACTOR, the Work is suspended for a period of more than ninety days by OWNER or under an order of court or other public authority, or ENGINEER fails to act on any Application for Payment within thirty days after it is submitted or OWNER fails for thirty days to pay CONTRACTOR any sum finally determined to be due, then CONTRACTOR may, upon seven days' written notice to OWNER and ENGINEER, and provided OWNER or ENGINEER do not remedy such suspension or failure within that time, terminate the Agreement and recover from OWNER payment on the same terms as provided in paragraph 15.4. In lieu of terminating the Agreement and without prejudice to any other right or remedy, if ENGINEER has failed to act on an Application for Payment within thirty days after it is submitted, or OWNER has failed for thirty days to pay CONTRACTOR any sum finally determined to be due, CONTRACTOR may, upon seven days' written notice to OWNER and ENGINEER stop the Work until payment of all such amounts due CONTRACTOR, including interest thereon. The provisions of this paragraph 15.5 are not intended to preclude CONTRACTOR from making claim under Articles 11 and 12 for an increase in Contract Price or Contract Times or otherwise for expenses or damage directly attributable to CONTRACTOR's stopping Work as permitted by this paragraph.

ARTICLE 16 -- DISPUTE RESOLUTION

If and to the extent that OWNER and CONTRACTOR have agreed on the method and procedure for resolving disputes between them that may arise under this Agreement, such dispute resolution method and procedure, if any, shall be as set forth in Exhibit GC-A, "Dispute Resolution Agreement," to be attached hereto and made a part hereof. If no such agreement on the method and procedure for resolving such disputes has been reached, and subject to the provisions of paragraphs 9.10, 9.11, and 9.12. OWNER and CONTRACTOR may exercise such rights or remedies as either may otherwise under the Contract Documents or by Laws or Regulations in respect any dispute.

ARTICLE 17 -- MISCELLANEOUS

Giving Notice:

17.1. Whenever any provision of the Contract Documents requires the giving of written notice, it will be deemed to have been validly given if delivered in person to the individual or to a member of the firm or to an officer of the corporation for whom it is intended, or if delivered at or sent by registered or certified mail, postage prepaid, to the last business address known to the giver of the notice.

Computation of Times:

17.2.1. When any period of time is referred to in the Contract Documents by days, it will be computed to exclude the first and include the last day of such period. If the last day of any such period falls on a Saturday or Sunday or on a day made a legal holiday by the law of the applicable jurisdiction, such day will be omitted from the computation.

17.2.2. A calendar day of twenty-four hours measured from midnight to the next midnight will constitute a day.

Notice of Claim: 17.3. Should OWNER or CONTRACTOR suffer injury or damage to person or property because of error, omission or act of the other party or of any of the other party's employees or agents or others for whose acts the other party is legally liable, claims will be made in writing to the other party within a reasonable time of the first observance of such injury or damage. The provisions of this paragraph 17.3 shall not be construed as a substitute for or a waiver of the provisions of any applicable statute of limitations or repose.

Cumulative Remedies:

17.4. The duties and obligations imposed by these General Conditions and the rights and remedies available hereunder to the parties hereto, and, in particular but without limitation, the warranties, guarantees and obligations imposed upon CONTRACTOR by paragraphs 6.12, 6.16, 6.30, 6.31, 6.32, 13.1, 13.12, 13.14, 14.3 and 15.2 and all of the rights and remedies available to OWNER and ENGINEER thereunder, are in addition to, and are not to be construed in any way as a limitation of, any rights and remedies available to any or all of them which are otherwise imposed or available by Laws or Regulations, by special warranty or guarantee or by other provisions of the Contract Documents, and the provisions of this paragraph will be as effective as if repeated specifically in the Contract Documents in connection with each particular duty, obligation, right and remedy to which they apply.

Professional Fees and Court Costs Included:

17.5. Whenever reference is made to "claims, costs, losses and damages," it shall include in each case, but not be limited to, all fees and charges of engineers, architects, attorneys and other professionals and all court or arbitration or other dispute resolution costs.

SEE SUPPLEMENTARY COSTS

[The remainder of this page was left blank intentionally.]

SUPPLEMENTAL CONDITIONS

GENERAL

TABLE OF CONTENTS

SUPPLEMENTARY CONDITIONS

Article	Title	Page
SC-1	Terms	SC-1
SC-2.3	Commencement of Contract Times	SC-1
SC-4.2	Subsurface and Physical Conditions	SC-1
SC-5.1	Performance, Payment, and Other Bonds	SC-1
SC-5.4	Contractor's Liability Insurance	SC-1
SC-5.6	Property Insurance	SC-4
SC-6.10	State Sales Tax	SC-5
SC-11.3.C	Unit Price Work	SC-5
SC-12.3.C	Rain Days	SC-5
SC-14.2	Materials Certification, Payment	SC-6
SC-14.2	Pay Requests	SC-6
SC-17.6	OSHA Requirements	SC-6
SC-17.7	Coordination with Utility Companies	SC-6
SC-17.8	Archeological Discoveries	SC-6
SC-17.9	Endangered Species	SC-6
SC-17.10	Allowance for Miscellaneous Extra Work	SC-7

SUPPLEMENTARY CONDITIONS

These Supplementary Conditions amend or supplement the Standard General Conditions of the Construction Contract (No. 1910-8) (1996 Edition) and other provisions of the Contract Documents as indicated below. All provisions which are not so amended or supplemented remain in full force and effect.

SC-1 The terms used in these Supplementary Conditions which are defined in the Standard General Conditions of the Construction Contract (No. 1910-8, 1990 Edition) have the meanings assigned to them in the General Conditions.

SC-2.3 Amend the paragraph by deletion of the last sentence.

SC-4.2 Test borings have not been made on the project and are not included in these specifications.

The Contractor shall satisfy himself regarding existing soil conditions and shall make any additional investigations he deems necessary to properly bid any and all Work related thereto. The Owner will assist bidders in gaining access to portions of the Work for the purpose of soil investigations if the Contractor chooses to do so. No additional amounts will be made available to the Contractor for work arising from failure to examine the site of subsoil conditions.

SC-5.1 Amend the first sentence of paragraph 5.1 to read as follows:

Contractor shall furnish Performance, Payment and Maintenance Bonds, each in an amount at least equal to the Contract Price as security for the faithful performance and payment of all CONTRACTOR's obligations under the Contract Documents.

Amend the first sentence of paragraph 5.3.1 to read as follows:

All Bonds shall be in the form prescribed by the Contract Documents except as provided otherwise by Laws or Regulations, and shall be executed by such sureties as are licensed to operate in the State of Texas.

SC-5.4. Public Liability Insurance. (Note "Indemnity" clause hereinafter). Before commencement of the work, the Contractor shall submit written evidence that he and all his subcontractors have obtained for the period of the Contract full Comprehensive General Liability Insurance coverage. This coverage shall protect the Contractor; the Owner; the Engineer, its architects and engineers; and each of their officers, agents and employees from claims for damages for bodily or personal injury, sickness or disease, including death, and from claims for damages to property, which may arise directly or indirectly out of, or in connection with the performance of work under this Contract by the Contractor, by any of his subcontractors, or by anyone directly or indirectly employed of either of them, or under the control of either of them, and the minimum amount of such insurance shall be as follows unless higher minimum amounts are otherwise required in the Contract Documents.

Coverage provided to the Additional Insured parties shall be primary to any other insurance carried by the Additional Insured. Recognition of this requirement shall be noted on each Insurance Certificate provided to the Owner and Engineer.

Public Liability Insurance in an amount not less than One Million Dollars ($1,000,000) for damages arising out of bodily or personal injury, sickness or disease, or death of one person and subject to the same limit for each person in an amount not less than One Million Dollars ($1,000,000) in any one occurrence; and property damage in an amount not less than One Million Dollars ($1,000,000) for all single combined damages arising out of injury to or destruction of property of others in any one occurrence with an aggregate limit in the same amount.

The Property Damage portion of this coverage shall include explosion, collapse and underground exposure coverage. In addition, where Completed Operation Insurance coverage is applicable, such coverage will be maintained after completion and acceptance of the project for the full guarantee period.

The limits of liability for the insurance required by paragraph 5.4. of the General Conditions shall provide coverage for not less than the following amounts or greater where required by Laws and Regulations:

5.4.1. and 5.4.2. Worker's Compensation, etc. under paragraphs 5.4.1. and 5.4.2. of the General Conditions:

(1)	State:	Statutory
(2)	Applicable Federal (e.g. Longshoreman's):	Statutory
(3)	Employer's Liability:	Statutory

5.4.3., 5.4.4., and 5.4.5. Comprehensive General Liability (under paragraphs 5.4.3. through 5.4.5. of the General Conditions):

(1) Bodily Injury (including completed operations and products liability)

$500,000.00 Each Occurrence

$2,000,000.00 Annual Aggregate

Property Damage:

$500,000.00 Each Occurrence

$2,000,000.00 Annual Aggregate

(2) Property Damage liability insurance will provide Explosion, Collapse and Underground coverages where applicable.

(3) Personal Injury, with employment exclusion deleted

$1,000,000.00 Annual Aggregate

5.4.6. Comprehensive Automobile Liability:

(1) Bodily Injury:

$250,000.00 Each Person

$500,000.00 Each Occurrence

(2) Property Damage:

$300,000.00 Each Occurrence

or a combined single limit of $ 1,000,000

SC5.4. Workers' Compensation Insurance Coverage

A. Definitions:

Certificate of coverage ("certificate") - A copy of a certificate of insurance, a certificate of authority to self-insure issued by the commission, or a coverage agreement (TWCC-81, TWCC-82, TWCC-83, or TWCC-84), showing statutory workers' compensation insurance coverage for the person's or entity's employees providing services on a project, for the duration of the project.

Duration of the project - includes the time from the beginning of the work on the project until the contractor's/person's work on the project has been completed and accepted by the governmental entity.

Persons providing services on the project ("subcontractor" in Section 406.096) - includes all persons or entities performing all or part of the services the contractor has undertaken to perform on the project, regardless of whether that person contracted directly with the contractor and regardless of whether that person has employees. This includes, without limitation, independent contractors, subcontractors, leasing companies, motor carriers, owner-operators, employees of any such entity, or employees of any entity which furnishes persons to provide services on the project. "Services" include, without limitation, providing, hauling, or delivering equipment or materials, or providing labor, transportation, or other service related to a project. "Services" does not include activities unrelated to the project, such as food/beverage vendors, office supply deliveries, and delivery of portable toilets.

B. The contractor shall provide coverage, based on proper reporting of classification codes and payroll amounts and filing of any coverage agreements, which meets the statutory requirements of Texas Labor Code, Section 401.011(44) for all employees of the contractor providing services on the project, for the duration of the project.

C. The Contractor must provide a certificate of coverage to the governmental entity prior to being awarded the contract.

D. If the coverage period shown on the contractor's current certificate of coverage ends during the duration of the project, the contractor must, prior to the end of the coverage period, file a new certificate of coverage with the governmental entity showing that coverage has been extended.

E. The contractor shall obtain from each person providing services on a project, and provide to the governmental entity:

(1) a certificate of coverage, prior to that person beginning work on the project, so the governmental entity will have on file certificates of coverage showing coverage for all persons providing services on the project; and

(2) no later than seven days after receipt by the contractor, a new certificate of coverage showing extension of coverage, if the coverage period shown on the current certificate of coverage ends during the duration of the project.

F. The contractor shall retain all required certificates of coverage for the duration of the project and for one year thereafter.

G. The contractor shall notify the governmental entity in writing by certified mail or personal delivery, within 10 days after the contractor knew or should have known, of any change that materially affects the provision of coverage of any person providing services on the project.

H. The contractor shall post on each project site a notice, in the text, form and manner prescribed by the Texas Workers' Compensation Commission, informing all persons providing services on the project that they are required to be covered, and stating how a person may verify coverage and report lack of coverage.

I. The contractor shall contractually require each person with whom it contracts to provide services on a project, to:

(1) provide coverage, based on proper reporting of classification codes and payroll amounts and filing of any coverage agreements, which meets the

statutory requirements of Texas Labor Code, Section 401.011(44) for all of its employees of the person providing services on the project;

(2) provide to the contractor, prior to that person beginning work on the project, a certificate of coverage showing that coverage is being provided for all employees of the person providing services on the project, for the duration of the project;

(3) provide the contractor, prior to the end of the coverage period, a new certificate of coverage showing extension of coverage, if the coverage period shown on the current certificate of coverage ends during the duration of the project;

(4) obtain from each other person with whom it contracts, and provide to the contractor:

(a) a certificate of coverage, prior to the other person beginning work on the project; and

(b) a new certificate of coverage showing extension of coverage, prior to the end of the coverage period, if the coverage period shown on the current certificate of coverage ends during the duration of the project;

(5) retain all required certificates of coverage on file for the duration of the projects and for one year thereafter;

(6) notify the governmental entity in writing by certified mail or personal delivery, within 10 days after the person knew or should have known, of any change that materially affects the provision of coverage of any person providing services on the project; and

(7) contractually require each person with whom it contracts, to perform as required by paragraphs (1) -(7), with the certificates of coverage to be provided to the person for whom they are providing services.

J. By signing this contract or providing or causing to be provided a certificate of coverage, the contractor is representing to the governmental entity that all employees of the contractor who will provide services on the project will be covered by workers' compensation coverage for the duration of the project, that the coverage will be based on proper reporting of classification codes and payroll amounts, and that all coverage agreements will be filed with the appropriate insurance carrier or, in the case of a self-insured, with the commission's Division of Self-Insurance Regulation. Providing false or misleading information may subject the contractor to administrative penalties, criminal penalties, civil penalties, or other civil actions.

K. The Contractor's failure to comply with any of these provisions is a breach of contract by the contractor which entitles the governmental entity to declare the contract void if the contractor does not remedy the breach within ten days after receipt of notice of breach from the governmental entity.

SC-5.6. Delete Paragraph 5.6. of the General Conditions in its entirety and insert the following in its place:

CONTRACTOR shall purchase and maintain property insurance upon the Work at the site in the amount of the full replacement cost thereof (subject to such deductible amounts as may be provided in these Supplementary Conditions or required by Laws and Regulations). This insurance shall:

5.6.A include the interests of OWNER, CONTRACTOR, Subcontractors, ENGINEER, ENGINEER's Consultants and any other persons or entities identified in the Supplementary Conditions, each of whom is deemed to have an insurable interest and shall be listed as an insured or additional insured;

5.6.B. be written on a Builder's Risk "all-risk" or open peril or special causes of loss policy form that shall at least include insurance for physical loss and damage to the Work, temporary buildings, falsework and Work in transit and shall insure against at least the following perils: fire, lightning, extended coverage, theft, vandalism and malicious mischief, earthquake, collapse, debris removal, demolition occasioned by enforcement of Laws and Regulations, water damage, and such other perils as may be specifically required by the Supplementary Conditions.

5.6.C. include expenses incurred in the repair or replacement of any insured property (including but not limited to fees and charges of engineers and architects);

5.6.D. cover materials and equipment in transit for incorporation in the Work or stored at the site or at another location that was agreed to in writing by OWNER prior to being incorporated in the Work, provided that such materials and equipment have been included in an Application for Payment recommended by ENGINEER; and

5.6.E. be maintained in effect until final payment is made unless otherwise agreed to in writing by OWNER, CONTRACTOR and ENGINEER with thirty days written notice to each other additional insured to whom a certificate of insurance has been issued.

The policies of insurance required to be purchased and maintained by CONTRACTOR in accordance with this paragraph 5.6 shall comply with the requirements of GC-5.7.

SC-6.10 State Sales Tax:

This contract is issued by an organization which qualifies for state sales tax exemption on materials which become a part of the project pursuant to state law. After bidding and prior to contract award, the low bidder will be required to provide a separation of materials and other costs for the amount of the base bid and each alternate for the purpose of sales tax exemption in accordance with state law. The Separation of Materials Form included with the contract documents must be submitted and approved prior to execution of the contract.

SC-11.3.C. Paragraph 11.3. of the General Conditions is hereby deleted in its entirety and the following is substituted in its place:

"The unit price of an item of Unit Price Work shall be subject to reevaluation and adjustment under the following conditions:

11.3.1. If the total cost of a particular item of Unit Price Work amounts to 5% or more of the Contract Price and the variation in the quantity of that particular item of Unit Price Work performed by Contractor differs by more than 25% from the estimated quantity of such item indicated in the Agreement; and

11.3.2. If there is no corresponding adjustment with respect to any other item of Work; and

11.3.3. If CONTRACTOR believes that CONTRACTOR has incurred additional expense as a result thereof; or if OWNER believes that the quantity variation entitles OWNER to an adjustment in the unit price, either OWNER or CONTRACTOR may make a claim for an adjustment in the Contract Price in accordance with Article 11 if the parties are unable to agree as to the effect of any such variations in the quantity of Unit Price Work performed."

SC-12.3 Paragraph 12.3 of the General Conditions is further clarified as follows: Time extensions due to “abnormal weather conditions” shall only be considered for months where above average rainfall is received at the project site based on local rain gauge.

In months receiving above average rainfall, only days or consecutive days that receive significant rain will be considered. Wet days will not be considered.

SC-14.2 Add the following to Paragraph 14.2 of the General Conditions:

Only materials and equipment which have approved certification test reports, as required by the provisions of the Technical Specifications, are eligible for payment prior to installation. The Contractor shall furnish the Owner with a paid invoice on all material on hand within 60 days (two progress payment cycles). Failure to provide a signed, paid invoice within 60 days will result in the removal of the particular material from the monthly progress payment request.

SC-14.2 Contractor shall include the following statement, positioned before the signature blocks, on each pay request for submission to the Engineer and Owner for payment: "In accordance with the Contract Documents, based upon on-site observations and the data comprising the above application, the Engineer represents to the Owner to the best of the Engineer's knowledge, information and belief, the Work (excluding Trench Safety) has progressed to the point indicated, the quality of the Work is generally in accordance with the Contract Documents, and the conditions precedent to Contractor's being entitled to such payment appear to have been fulfilled insofar as it is the Engineer's responsibility to observe Contractor's Work. The Contractor is solely responsible for trench safety and, as such, the Engineer makes no representation that this pay item has been performed in a manner consistent with the Contract Documents."

SC-17.6 OSHA Requirements:

The Contractor will be required to adhere to, and all mechanical equipment and construction procedures shall conform to, all of the applicable requirements of the Federal Occupational Safety and Health Act of 1970 (OSHA) which is made a part of this contract by reference.

SC-17.7 Coordination with Utility Companies:

The contractor is hereby advised that utility companies occupy the area in which the work is to be performed.

The Project Engineer will provide the Contractor all information in his possession as to the location of utilities, but it shall be the responsibility of the Contractor to contact each utility for the exact marking and location of each line. The Contractor shall locate, identify and protect these lines at no direct pay and he shall be responsible for any damage.

SC-17.8 Archeological Discoveries:

No activity which may affect an archeological site is authorized until the Owner has complied with the provisions of the National Historic Preservation Act and the Antiquities Code of Texas. The Owner has previously coordinated with the appropriate agencies and impacts to known cultural or archeological deposits have been avoided or mitigated. However, the Contractor may encounter unanticipated cultural or archeological deposits during construction.

If archeological sites or historic structures are discovered after construction operations are begun, the Contractor shall immediately cease operations in that particular area and notify the Owner, the TWDB, and the Texas Historical Commission, (512-463-6096). The Contractor shall take reasonable steps to protect and preserve the discoveries until they have been inspected by the Owner's representative and the TWDB. The Owner will promptly coordinate with the Texas Historical Commission and any other appropriate agencies to obtain any necessary approvals or permits to enable the work to continue. The Contractor shall not resume work in the area of the discovery until authorized to do so by the Owner.

SC-17.9 Endangered Species:

No activity is authorized that is likely to jeopardize the continued existence of a threatened or endangered species as listed or proposed for listing under the Federal Endangered Species Act (ESA), and/or the State of Texas Parks and Wildlife Code on Endangered Species, or to destroy or adversely modify the habitat of such species.

If a threatened or endangered species is encountered during construction, the Contractor shall immediately cease work in the area of the encounter and notify the Owner, who will immediately implement actions in accordance with the ESA and applicable State statutes. These actions shall include reporting the encounter to the TWDB, the U. S. Fish and Wildlife Service, and the Texas Parks and Wildlife Department, obtaining any necessary approvals or permits to enable the work to continue, or implement other mitigative actions. The Contractor shall not resume construction in the area of the encounter until authorized to do so by the Owner.

SC-17.10 Allowance for Miscellaneous Extra Work:

If so stated in the Bid Proposal, a discretionary allowance has been established in the Bid Proposal for miscellaneous extra work which may arise during the construction phase of the project due to the discovery of unknown obstructions or other unexpected project conditions for which a method of payment, such as individual bid items, has not been established. This allowance is not intended to be used to procure payment for items specifically named as subsidiary to other bid items within the Contract documents. Prior to initiating any item of extra work under this bid item, the Owner, Engineer, and Contractor will agree as to the scope of extra work to be performed and the amount of payment to be made for the particular item of extra work under consideration. A written field order for the extra work will be approved by all parties before commencing with extra work. Expenditure of any of the allowance funds is at the sole discretion of the Owner. The allowances may be used in full or in part as the Owner deems necessary. If no extra work is identified and approved by the Owner, the allowance funds will not be expended.

GENERAL PROJECT SPECIFICATIONS

SECTION 01010

SUMMARY OF WORK

PART 1 GENERAL

1.1 SECTION INCLUDES

A. Construct work as described in the Contract Documents.

B. Provide the materials, equipment, and incidentals required to make the project completely operable.

C. Provide the labor, equipment, tools, and consumable supplies required for a complete project.

D. Provide the civil, architectural, structural, mechanical, electrical, instrumentation, and all other work required for a complete and operable project.

E. Test and place the completed project in operation.

F. Plans and specifications may not indicate or describe all of the work required to complete the project. Additional details required for the correct installation of selected products are to be provided by the Contractor and coordinated with the Engineer.

1.2 JOB CONDITIONS

A. The General Conditions, the Supplementary Conditions, and Division One specifications apply to each of the other specification sections.

B. Comply with all applicable federal, state, and local codes and regulations pertaining to the nature and character of the work being performed.

1.3 DESCRIPTION OF WORK

Work is described in general, non-inclusive terms as:

The construction of pedestrian infrastructure including concrete sidewalks, curb ramps, driveways, culverts, retaining walls, toe walls, and associated improvements.

WORK UNDER OTHER CONTRACTS

A. The following items of work are not included in this contract, but may impact construction scheduling, testing, and start up.

1. Contractors are expected to coordinate schedules prior to establishing firm project schedules. The scheduling for any project elements that rely on the completion of an element that is under another contractor's project will be discussed at the preconstruction meeting. Final construction schedules may be submitted after the preconstruction meeting.

In the case of a disagreement between the above list and those specified elsewhere in the contract documents, the Contractor is to base his bid on the most expensive listing.

1.4 CONTRACTOR'S USE OF PROJECT SITE

A. Limit use of site and premises to allow:

1. Owner occupancy

2. Work by others and work by Owner.

B. Coordinate the use of the premises with the Engineer.

C. Assume full responsibility for the protection and safekeeping of products stored at the site.

D. Store products to allow the Owner access for maintenance and operations.

E. Obtain and pay for the use of any additional storage or work areas needed for construction.

F. Any damage to existing facilities, including contamination, caused by the Contractor's personnel, visitors, materials, or equipment, shall be repaired or corrected at the Contractor's expense.

G. No alcoholic beverages, illegal substances, or weapons (whether legal or not) shall be permitted on the site at any time.

PART 2 PRODUCTS

Not Used.

PART 3 EXECUTION

[Not Used]

END OF SECTION

SECTION 01019

CONTRACT CONSIDERATIONS

PART 1 GENERAL

1.1 SECTION INCLUDES

A. Miscellaneous Allowance

B. Application for Payment

C. Change Procedures

D. Defect Assessment

E. Measurement and Payment - Unit Prices

F. Alternatives

1.2 MISCELLANEOUS ALLOWANCE

A. Included in the Contract is a miscellaneous allowance for use upon Owner's instruction.

B. Contractor's costs for Products, delivery, installation, labor, insurance, payroll, taxes, bonding, equipment rental, overhead and profit will be included in a written field order authorizing expenditure of funds from this Contingency Allowance.

C. Funds will be drawn from the Contingency Allowance only by written field order.

D. At closeout of Contract, funds remaining in Contingency Allowance will be retained by the Owner.

1.3 APPLICATION FOR PAYMENT

A. Submit number of copies as determined during the pre-construction conference. Three to five original pay requests should be anticipated.

B. Content and Format - Utilize Schedule of Values for listing items in Application for Payment.

C. Payment Period: Refer to General Conditions.

D. Include an updated construction progress schedule.

1.4 CHANGE PROCEDURES

A. The Engineer will advise of minor changes in the Work not involving an adjustment to Contract Sum/Price or Contract Time as authorized by issuing supplemental instructions.

B. The Engineer may issue a Notice of Change which includes a detailed description of a proposed change with supplementary or revised Drawings and specifications, and a change in Contract Time for executing the change. Contractor will prepare and submit an estimate within ten (10) days.

C. The Contractor may propose changes by submitting a request for change to the Engineer, describing the proposed change and its full effect on the Work. Include a statement describing the reason for the change, and the effect on the Contract Sum/Price and Contract Time with full documentation and a statement describing the effect on Work by separate or other Contractors. Document any requested substitutions in accordance with Section 01600.

D. Stipulated Sum/Price Change Order: Based on Notice of Change and Contractor's fixed price quotation or Contractor's request for a Change Order as approved by Engineer.

E. Unit Price Change Order: For contract unit prices and quantities, the Change Order will be executed on a fixed unit price basis. For unit costs or quantities of units of work which are not pre-determined, execute Work under a Work Directive Change.

F. Construction Change Directive: Engineer may issue a directive, on AIA Form G713 - Construction Change Directive, EJCDC 1910-8-F Work Directive Change or Engineer's standard form signed by the Owner, instructing the Contractor to proceed with a change in the Work, for subsequent inclusion in a Change Order. Document will describe changes in the Work and designate method of determining any change in Contract Sum/Price or Contract Time. Promptly execute the change.

G. Change Order: Submit itemized account and supporting data after completion of change, within time limits indicated in the Conditions of the Contract.

H. Execution of Change Orders: Engineer will issue Change Orders for signatures of parties as provided in the Conditions of the Contract.

1.7 DEFECT ASSESSMENT

A. Replace the Work, or portions of the Work, not conforming to specified requirements.

B. If, in the opinion of the Engineer, it is not practical to remove and replace the Work, the Engineer will direct an appropriate remedy or adjust payment.

1.8 MEASUREMENT AND PAYMENT - LUMP SUM PRICES

A. This section of the specifications covers the components considered to be a portion of each pay item as may or may not be listed in the Unit Price Schedule and is furnished to aid the Contractor in preparing his bid. Of necessity, the items described as components of the various items are discussed in a general manner only, describing the major pieces of equipment and/or materials. Any items and/or appurtenances not specifically mentioned shall be considered a portion of the bid item to which, in the opinion of the Engineer, its function is most directly related. Failure to list all items and/or appurtenances does not relieve the Contractor from furnishing all apparatuses, devices, labor, or materials of whatever nature required for a complete and operating installation in accordance with the intent of the Drawings, approved Shop Drawings, and these Specifications.

B. The successful Contractor shall, as soon as possible after award of the Contract, submit a list itemizing the components of each Lump Sum Bid Item and their respective costs to be used as an aid in the preparation of partial payments.

1.9 ALTERNATIVES

A. Accepted Alternatives will be identified in Owner-Contractor Agreement.

B. Coordinate related work and modify surrounding work as required.

PART 2 PRODUCTS

Not Used.

PART 3 EXECUTION

Not Used.

END OF SECTION

SECTION 01027

APPLICATIONS FOR PAYMENT

PART 1 GENERAL

1.1 SECTION INCLUDES

A. Procedures for preparation and submittal of applications for payment.

1.2 RELATED SECTIONS

A. Section 01019 - Contract Considerations: Procedures for changes to the Work.

B. Section 01019 - Contract Considerations: Schedule of values.

C. Section 01300 - Submittals: Submittal procedures.

D. Section 01700 - Contract Closeout: Final payment.

1.3 FORMAT

A. Minimum requirements include cover page for original signatures followed by detailed breakdown of scheduled valves. Other Engineer approved forms may be used.

B. For each item, provide a column for listing each of the following:

1. Item Number
2. Description of work
3. Scheduled Values
4. Previous Applications
5. Work in Place and Stored Materials under this Application
6. Authorized Change Orders
7. Total Completed and Stored to Date of Application
8. Percentage of Completion
9. Balance to Finish
10. Retainage

1.4 PREPARATION OF APPLICATIONS

A. Present required information in typewritten form or electronic media printout.

B. Execute certification by signature of authorized officer.

C. Use data from approved Schedule of Values. Provide dollar value in each column for each line item for portion of work performed and for stored Products.

D. List each authorized Change Order as an extension to the pay request, listing Change Order number and dollar amount as for an original item of Work.

E. Prepare Application for Final Payment as specified in Section 01700.

F. As listed in Supplemental Conditions: Contractor shall include the following statement, positioned before the signature blocks, on each pay request for submission to the Engineer and Owner for payment: “In accordance with the Contract Documents, based upon on-site observations and the data comprising the above application, the Engineer represents to the Owner to the best of the Engineer’s knowledge, information and belief, the Work (excluding Trench Safety) has progressed to the point indicated, the quality of the Work is generally in accordance with the Contract Documents, and the conditions precedent to Contractor’s being entitled to such payment appear to have been fulfilled insofar as it is the Engineer’s responsibility to observe Contractor’s Work. The Contractor is solely responsible for trench safety and, as such, the Engineer makes no representation that this pay item has been performed in a manner consistent with the Contract Documents.”

1.5 SUBMITTAL PROCEDURES

A. Submit a minimum of three (3) copies of each Application for Payment.

B. Submit an updated construction schedule with each Application for Payment.

C. Payment Period: Submit at intervals stipulated in the Agreement.

D. Include the following with the application:

E. 1. Partial release of liens from major subcontractors and vendors.
2. Affidavits attesting to off-site stored products.
3. Construction progress schedules, revised and current.

2 PART 2 PRODUCTS

Not Used.

3 PART 3 EXECUTION

Not Used.

END OF SECTION

SECTION 01039

COORDINATION AND MEETINGS

PART 1 GENERAL

1.1 SECTION INCLUDES

A. Coordination and Project Conditions

B. Field Engineering

C. Preconstruction Meeting

D. Site Mobilization Meeting

E. Progress Meetings

1.2 COORDINATION AND PROJECT CONDITIONS

A. Coordinate scheduling, submittals, and Work of the various sections of the Project Manual to ensure efficient and orderly sequence of installation of interdependent construction elements with provisions for accommodating items installed later.

B. Verify utility requirements and characteristics of operating equipment are compatible with building utilities. Coordinate work of various sections having interdependent responsibilities for installing, connecting to, and placing in service such equipment.

C. Coordinate space requirements, supports and installation of mechanical and electrical Work which are indicated diagrammatically on Drawings. Follow routing shown for pipes, ducts and conduit as closely as practicable; place runs parallel with lines of building. Utilize spaces efficiently to maximize accessibility for other installations, for maintenance, and for repairs. The Contractor is responsible for adjusting routing to avoid conflicts. Submit proposed changes for Engineer's review.

D. In finished areas, except as otherwise indicated, conceal pipes, ducts and wiring within the construction. Coordinate locations of fixtures and outlets with finish elements.

E. Coordinate completion and clean-up of Work of separate sections in preparation for Substantial Completion.

F. After Owner occupancy of premises, coordinate access to site for correction of defective Work and Work not in accordance with Contract Documents to minimize disruption of Owner's activities

1.3 FIELD ENGINEERING

A. Engineer will locate and protect survey control and reference points.

B. Control datum for survey is that shown on Drawings.

C. Verify set-backs and easements; confirm drawing dimensions and elevations.

D. Provide field engineering services. Establish elevations, lines, and levels, utilizing recognized engineering survey practices.

1.4 PRECONSTRUCTION MEETING

A. Engineer will schedule a meeting after Notice of Award.

B. Attendance Required: Owner, Engineer, Contractors and major Subcontractors.

C. Agenda:

1. Distribution of Contract Documents.

2. Submission of list of Subcontractors, list of Products, schedule of values, and progress schedule.

3. Designation of personnel representing the parties in Contract and the Engineer.

4. Procedures and processing of field decisions, submittals, substitutions, applications for payments, proposal request, Change Orders, and Contract closeout procedures.

5. Scheduling.

D. Engineer to record minutes and distribute copies within five (5) days after meeting to participants.

1.5 SITE MOBILIZATION MEETING

A. Engineer will schedule a meeting at the Project site prior to Contractor occupancy.

B. Attendance Required: Owner, Engineer, Contractor, Contractor's superintendent and major Subcontractors.

C. Agenda:

1. Use of premises by Owner and Contractor.

2. Owner's requirements.

3. Construction facilities and controls.

4. Temporary utilities.

5. Survey and building layout.

6. Security and housekeeping procedures.

7. Schedules.

8. Application for Payment procedures.

9. Procedures for testing.

10. Procedures for maintaining record documents.

11. Requirements for start-up of equipment.

12. Inspection and acceptance of equipment put into service during construction period.

1.6 PROGRESS MEETINGS

A. Schedule and administer meetings throughout progress of the Work at maximum monthly intervals.

B. Engineer will make arrangements for meetings, prepare agenda with copies for participants, preside at meetings.

C. Attendance Required: Job superintendent, major Subcontractors and suppliers, Owner, Engineer as appropriate to agenda topics for each meeting.

D. Agenda:

1. Review minutes of previous meetings.

2. Review of Work progress.

3. Field observations, problems, and decisions.

4. Identification of problems, which impede planned progress.

5. Review of submittals schedule and status of submittals.

6. Review of off-site fabrication and delivery schedules.

7. Maintenance of progress schedule.

8. Corrective measures to regain projected schedules.

9. Planned progress during succeeding work period.

10. Coordination of projected progress.

11. Maintenance of quality and work standards.

12. Effect of proposed changes on progress schedule and coordination.

13. Other business relating to work.

E. Engineer will record minutes and distribute copies within five (5) days after meeting to participants.

PART 2 PRODUCTS

Not Used

PART 3 EXECUTION

Not Used

END OF SECTION

SECTION 01040

PROJECT ADMINISTRATION

PART 1 GENERAL

1.1 SECTION INCLUDES

Administer contract requirements to construct the project. Provide documentation per the requirements of this section. Provide information as requested by the Engineer or Owner concerning this project.

1.2 COMMUNICATION DURING THE PROJECT

A. The Engineer is to be the first point of contact for all parties on matters concerning this project.

B. The Engineer will coordinate correspondence concerning:

1. Submittals, including payment requests.

2. Clarification and interpretation of the Contract Documents.

3. Contract modifications.

4. Observation of work and testing.

5. Claims.

C. The Engineer will normally communicate only with the Contractor. Any required communication with suppliers or subcontractors will only be with the direct involvement of the Contractor.

D. Written communications are to be directed to the Engineer at the address indicated in the pre-construction conference. Communications should include as a minimum:

1. Name of the Owner.

2. Project name.

3. Contract title.

4. Project number.

5. Date.

6. A reference statement.

1.3 PROJECT MEETINGS

A. Pre-construction Conference

1. Attend a pre-construction conference.

2. The Engineer will determine the location of the conference.

3. The time of the conference will be determined by the Engineer but will be after the notice of award is issued and not later than fifteen days after the notice to proceed is issued.

4. The conference may be attended by the Owner, Engineer, and representatives of utility companies. The Contractor's project manager, superintendent, and representatives from major subcontractors shall be present.

5. Contractor should provide and be prepared to discuss:

    a. Preliminary construction schedule.

    b. List of suppliers and subcontractors.

    c. Contractor's organizational chart as it relates to this project.

    d. Letter indicating the agents of authority for the Contractor and the limit of that authority with respect to the execution of legal documents.

1.4 EMERGENCY WORK

A. Notify the Owner and Engineer immediately of any additional work that must be performed to prevent injury or damage to existing structures, facilities, utilities, or work in place.

B. When possible, obtain authorization from the Owner before proceeding.

1.5 CLAIMS

A. Do not perform any work that is considered to be outside the scope of the Contract Documents without an approved Field Work Order or Change Order.

B. File notice of claims with the Engineer within ten days of the event giving rise to the claim.

C. Provide full documentation within 30 days of the notice.

D. Items not reported within the stipulated time will not be considered.

1. Failure to notify the Owner of potential claims does not allow the Owner to take alternative action to prevent the Contractor from incurring the cost for the item or to perform the work in a different manner.

2. Failure to notify the Owner does not allow operations to be monitored for the actual cost of performing the work.

E. When the Engineer has received full documentation, the claim will be reviewed in the context of the Contract Documents.

1. If the claim is believed to be valid, a Change Order will be prepared and payment of the Change Order will be recommended.

2. If the claim is not believed to be valid, then the claim will be denied with an explanation of the reasons.

3. Should the Contractor disagree with the decision of the Engineer, the Contractor may refuse to do the work.

a. If the Owner insists that the work be done, proceed with the work on a time and materials basis.

b. The validity of the claim will be resolved at a later time in accordance with the Contract Documents.

1.6 RECORD DOCUMENTS

A. Maintain at the site one complete record copy of:

1. Drawings.

2. Specifications.

3. Addenda.

4. Contract modifications.

5. Approved shop drawings/product data.

6. Test records.

B. Store documents and samples in the Contractor's field office or with the superintendent if the Contractor does not have a field office.

1. The documents are to remain separated from documents used for construction. These documents are not to be used for construction.

2. Maintain the documents in a clean, dry, legible condition and in good order.

3. Make the documents available at all times for inspection by the Engineer and Owner.

C. Marking Drawings

1. Label each document as "Project Record" in large printed letters.

2. Record information as construction is being performed.

   a. Do not conceal any work until the required information is recorded.

   b. Mark drawings to record actual construction, including the following:

      1) Depths of various elements of the foundation in relation to finished first floor datum or the tops of walls.

      2) Horizontal and vertical locations of underground utilities and appurtenances constructed and existing utilities encountered during construction.

      3) Location of internal utilities and appurtenances concealed in the construction. Make reference to permanent structure on the surface.

      4) Changes of dimension and detail.

      5) Changes made by Field Order and Change Order.

      6) Details not on the original plans.

   c. Mark specifications and addenda to record the materials and equipment provided.

      1) Record manufacturer name, trade name, catalog number, and each supplier (with address and phone number) of each product and item of equipment actually installed.

      2) Record changes made by Field Order and Change Order.

   d. Submit record documents to the Engineer for review and acceptance 30 days prior to final completion of the project. Provide one set of marked up drawings and one set of specifications.

   e. Payment requests may not be recommended for payment if record documents are found to be incomplete or not in order. Final payment will not be recommended without record documents.

END OF SECTION

SECTION 01041

JOB MANAGEMENT

PART 1 GENERAL

1.1 SECTION INCLUDES

A. Furnish equipment, manpower, products, and other items necessary to complete the project with an acceptable standard of quality and within the contract time. The project shall be constructed in accordance with current safety practices.

B. Manage the project site to allow access to site and control construction operations.

C. Provide labor, materials, equipment, and incidentals necessary to construct temporary facilities to provide and maintain control over environmental conditions at the job site including the removal of temporary facilities when no longer needed.

D. Temporary controls shall include the construction of temporary impounding works, channels, diversions, furnishing and operation of pumps, installing piping and fittings, and other construction for control of conditions at the site. Remove temporary controls at the end of the project.

1.2 RELATED SECTIONS

A. Section 02220 – Trench Safety.

1.3 SUBMITTALS

The Contractor shall submit to the Engineer two copies of reports prepared concerning accidents, injury, or death on the project site.

1.4 QUALITY ASSURANCE

A. Notify the Engineer as required by the provisions of Section 01040 – Project Administration.

B. Employ competent workmen skilled in the occupation for which they are employed. Provide only first quality workmanship. The Engineer shall determine if the quality of work is acceptable.

C. A defective product is any product that has been found not to be in compliance with the contract documents or is damaged prior to final completion. Defective products shall be removed from the site immediately.

D. Defective products may remain at the site if arrangements have been made to allow repair of the product at the site. Clearly mark the product as defective until removed or repairs have been completed.

1.5 DELIVERY, STORAGE, AND HANDLING

A. Products shall be delivered to the site per the progress schedule to prevent delays.

B. Deliver packaged products to site in original undamaged containers with identifying labels attached. Open cartons as necessary to check for damage and to verify invoices. Reseal cartons and store until used. Leave products in packages or other containers until installed.

C. Deliver products that are too large to fit through openings to the site in advance of the time enclosing walls and roofs are erected. Set in place raised above the floor on cribs.

D. The Contractor shall assume full responsibility for the protection and safekeeping of products stored at the site. Protect the products until installed.

E. Store products at a location acceptable to the Engineer and that allows Owner access for maintenance and operations. Store immediately upon delivery in accordance with the manufacturer's storage instructions and with seals and labels intact. Arrange storage to allow access for maintenance of stored items and for inspection. Store unpacked and loose products on shelves, in bins, or in neat groups of like items.

F. Obtain and pay for the use of any additional storage or work areas needed for construction. Provide and maintain storage buildings as required for the protection of products. Remove these at the completion of the project. Store products subject to damage by the elements in substantial weather-tight enclosures or storage buildings of adequate dimensions. Maintain temperature and humidity within the ranges stated in the manufacturer's instructions. Provide humidity control and ventilation for sensitive products as required by manufacturer's instructions.

G. Provide adequate exterior storage for products that may be stored out-of-doors.

1. Provide substantial platforms, blocking, or skids to support fabricated products above ground. Slope to provide drainage. Protect products from soiling or staining.

2. For products subject to deterioration from exposure to the elements, cover them with impervious sheet materials. Provide ventilation to prevent condensation below the covering.

3. Store loose, granular materials on clean, solid surfaces or on rigid sheet materials to prevent mixing with foreign matter.

4. Provide surface drainage to prevent erosion and ponding of water.

5. Prevent mixing of refuse or chemically injurious materials or liquids with stored materials.

6. Store light weight products to prevent wind damage.

H. Maintain storage facilities. Inspect stored products periodically to verify that the:

1. Storage facilities continue to meet specified requirements.

2. Manufacturer's required environmental conditions are continually maintained.

3. Surfaces of products exposed to the elements are not adversely affected and that weathering of finishes is within acceptable tolerances to provide a finished project meeting the requirements of the contract documents.

I. Protect and maintain mechanical and electrical equipment in storage

1. Provide manufacturer's service instructions on the exterior of the package.

2. Service equipment on a regular basis as recommended by the manufacturer. Maintain a log of maintenance services. Submit the log to the Engineer at the completion of the project.

3. Provide power to and energize space heaters for all equipment for which these devices are provided.

4. Provide temporary enclosures for all electrical equipment including electrical systems on mechanical devices. Provide and maintain heat in the enclosures until equipment is energized.

J. Replace, at no additional cost, any stored item damaged by inadequate protection or environmental controls.

K. Payment may be withheld for any products not properly stored.

1.6 STANDARDS

Perform work to comply with local, state, and federal ordinances and regulations.

1.7 COORDINATION

A. Coordinate the work of various trades having interdependent responsibilities for installing, connecting to, and placing work in service.

B. Coordinate requests for substitutions to provide compatibility of space, operating elements, effect on the work of other trades, and on the work scheduled for early completion.

C. Coordinate the use of project space and the sequence of installation of equipment, elevators, walks, mechanical, electrical, plumbing, or other work that is indicated diagrammatically on the plans.

1. Follow the routings shown for tubes, pipes, ducts, conduits, and other items as closely as practical with due allowance for available physical space.

2. Utilize space efficiently to maximize accessibility for Owner's maintenance and repairs.

D. Where installation of one part of the work is dependent on installation of other components, either before or after its own installation, schedule construction activities in the sequence required to obtain best results.

E. Make adequate provisions to accommodate items scheduled for later installation including accepted bid alternates, Owner-supplied Contractor-installed items, work by others, and installation of products purchased with allowances.

1.8 PERMITS

A. Obtain permits and pay fees necessary to conduct any part of the work. The only exception is that the Owner will obtain any permits for which only the Owner can apply. The Owner will pay the fees to obtain the permits for which the Owner must apply. The Contractor must abide by the restrictions of any Owner-supplied permits at the Contractor’s expense.

B. Arrange for inspections and certifications by agencies having jurisdiction over the work.

C. Make arrangements with private utility companies and pay inspection fees and fees associated with obtaining services.

1.9 DUST CONTROL

A. EXTERIOR

1. Provide positive methods to minimize raising dust from construction operations.

2. Wet materials and rubbish to prevent blown dust.

1.10 POLLUTION CONTROL

A. Prevent the contamination of soil, water, or atmosphere by the discharge of noxious substances from construction operations. Provide adequate measures to prevent the creation of noxious air-borne pollutants. Prevent dispersal of pollutants into the atmosphere. The Contractor shall not dump or otherwise discharge noxious or harmful fluids into drains or sewers nor allow noxious liquids to contaminate public waterways in any manner.

1.11 EARTH CONTROL

Remove excess soil, spoil materials, and other earth not required for backfill at the time of generation. Control stock pile material to eliminate interference with construction and Owner's operations.

1.12 SAFETY REQUIREMENTS

A. Protect the safety and welfare of workmen on the project, the Owner, and the general public around the construction site. The Contractor is solely responsible for safety at the project site. Provide and maintain barricades, guard rails, covered walkways, and other protective devices to warn and protect from hazards at the construction site.

B. Trenches shall comply with the provisions of Section 02220 – Trench Safety.

C. Perform construction within buildings or structures occupied by the Owner per established fire codes and ordinances.

1.13 CONTRACTOR'S USE OF PROJECT SITE

A. Limit the use of site for work and storage to those areas approved by the Owner. Coordinate the use of the premises with the Engineer.

B. Any damage to existing facilities, including contamination, caused by the Contractor's personnel, visitors, materials, or equipment shall be repaired or corrected at the Contractor's expense.

C. No alcoholic beverages, illegal substances, or weapons (whether legal or not) shall be permitted on the site at any time.

D. Park equipment and employees' vehicles only in areas approved by the Owner.

E. Enter privately-owned land outside of the Owner's property, rights-of-way, or easements only with written permission of the landowner.

1.14 ACCESS TO THE SITE

A. Maintain access to the facilities at all times. Roads, pedestrian walks, and access to buildings, structures, stairways, and entrances shall not be obstructed. Provide safe temporary walks or other structures to allow access for normal operations during construction.

B. Provide adequate and safe access for inspections. Leave ladders, bridges, and scaffolding in place until inspection has been completed. Construct access as required for inspections.

C. Provide security at the construction site as necessary to protect against vandalism and loss by theft.

D. Maintain security of the site and access leading to it.

1. Close gates and keep them locked.

2. Obtain permission of any landowners whose property must be crossed in gaining access to the site.

3. Install gate locks. Provide keys to the Owner, Engineer, Contractor, and landowner.

1.15 MAINTENANCE OF WATER

Manage water resulting from rains or ground water at the site. Maintain trenches and excavations free of water at all times. Provide and maintain pumps as necessary to remove excess water. Direct water away from the site to prevent damage to surrounding property.

1.16 PROTECTION OF EXISTING STRUCTURES AND UTILITIES

A. Examine the project site and review the available information concerning the site.

B. Determine if existing structures, poles, piping, or other utilities will require relocation or replacement. Coordinate work with the Owner, Engineer, local utility companies, and others. Include the cost of demolition and replacement or relocation of these structures in the bid amount.

C. Protect structures not to be replaced or relocated from damage during construction. Structures or utilities damaged during or as a result of construction shall be restored to a condition matching or better than that which existed before the start of construction at the Contractor's expense.

D. Protect existing trees and landscaping at the site.

1. Visit the site with the Engineer to identify trees that may be removed during construction.

2. Trees to be removed shall be marked with paint.

3. Protect trees to remain from damage by wrapping trunks with 2 x 4 timber around the perimeter, securely wired in place, where machinery must operate around existing trees. Protect branches and limbs from damage by equipment.

1.17 CLEANING DURING CONSTRUCTION

A. Clean the project as work progresses and dispose of waste materials. Keep the site free from accumulations of waste or rubbish. Provide containers on site for waste collection.

B. Use only those cleaning products that will not create hazards to health or property and those methods recommended by the manufacturer of the surfaces

to be cleaned. Use cleaning products only on those surfaces recommended by the cleaning product manufacturer.

C. Comply with applicable codes, ordinances, regulations, and anti-pollution laws. Waste materials shall not be burned or buried. Volatile or hazardous waste materials shall not be disposed of in storm drains or sanitary sewers.

D. Transport waste materials in a controlled manner with as few handlings as possible. Materials shall not be dropped from heights.

E. Remove waste materials, rubbish, and debris from the site and legally dispose of these at public or private dumping areas.

F. Waste materials or debris shall not be allowed to blow off of the site.

1.18 TRAFFIC MAINTENANCE

A. Contactor shall adhere to all requirements for the TxDOT driveway permits.

1.19 FIELD MEASUREMENTS

A. Perform complete field measurements of the dimensions at the site for products required to fit existing conditions prior to purchasing products affected by that measurement.

B. Verify property lines, control lines, grades, and levels indicated on the plans.

C. Verify pipe class, equipment capacities, electrical systems, and power sources for existing conditions.

D. Check shop drawings and indicate the actual dimensions available where products are to be installed.

E. Include field measurements in record drawings as required in Section 01040 – Project Administration.

1.20 REFERENCE DATA AND CONTROL POINTS

A. Locate and protect control points prior to starting the project and preserve permanent reference points during construction. The Contractor shall not change or relocate points without prior approval of the Engineer. Notify the Engineer when the reference point is lost, destroyed, or requires relocation. Replace project control points on the basis of the original survey.

B. Provide complete engineering layout of the work needed for construction.

1. Provide competent personnel. Provide equipment including accurate surveying instruments, stakes, tools, and materials.

2. Survey accuracy is to meet the requirements established for Category 5 Construction Surveying as established in the Manual of Practice of Land

Surveying in Texas published by the Texas Society of Professional Surveyors, latest revision.

3. Record data and measurements per standards.

1.21 EXCESS EARTH

Dispose of earth removed from excavations that is not required for backfill or embankments. Remove excess earth from the site within a reasonable time after completing excavation work.

1.22 INITIAL MAINTENANCE

A. Maintain equipment until the project is accepted by the Owner. Insure that mechanical equipment is properly lubricated and cared for as recommended by the manufacturer.

PART 2 MATERIALS

Materials shall be in accordance with the requirements of the individual specification sections.

PART 3 EXECUTION

Not Used.

END OF SECTION

SECTION 01090

REFERENCE STANDARDS

PART 1 GENERAL

1.1 SECTION INCLUDES

A. Quality Assurance

1.2 QUALITY ASSURANCE

A. For Products or workmanship specified by association, trade or other consensus standards, comply with requirements of the standard, except when more rigid requirements are specified or are required by applicable codes.

B. Conform to reference standard by date of issue current on date of Contract Documents.

C. Obtain copies of standards when required by the Contract Documents.

D. Maintain copy at project site during submittals, planning and progress of the specific work, until Substantial Completion.

E. Should specified reference standards conflict with Contract Documents, request clarification from the Engineer before proceeding.

F. Neither the contractual relationship, duties and responsibilities of the parties in Contract nor those of the Engineer shall be altered by the Contract Documents by mention or inference otherwise in any reference document.

PART 2 PRODUCTS

Not used.

PART 3 EXECUTION

Not used.

END OF SECTION

SECTION 01200

UNIT BID PRICES

PART 1 GENERAL

1.1 SECTION INCLUDES

A. This section of the Specifications covers the components considered to be a portion of each pay item as may or may not be listed in the Unit Price Schedule and is furnished to aid the Contractor in preparing his bid.

1. Of necessity, the items described as components of the various items are discussed in a general manner only, describing the major pieces of equipment and/or materials.

2. Any items and/or appurtenances not specifically mentioned shall be considered a portion of the bid item to which, in the opinion of the Engineer, its function is most directly related.

3. Failure to list all items and/or appurtenances does not relieve the Contractor from furnishing all apparatuses, devices, labor, or materials of whatever nature required for a complete and operating installation in accordance with the intent of the Drawings, approved Shop Drawings, and the Specifications.

B. The successful Contractor shall, as soon as possible after award of the Contract, submit a list itemizing the components of each Lump Sum Bid Item and their respective costs to be used as an aid in the preparation of partial payments.

C. The work called for by these Contract Documents shall be paid for under a single contract on a unit price basis.

D. The total price bid shall constitute full compensation for all work indicated on the bid proposal.

E. Partial payments shall be made to the Contractor based on monthly estimates submitted to the Engineer for approval in accordance with the General and Special Conditions.

F. All estimates for partial payment shall be based on completed work and corresponding dollar amounts as provided in the bid proposal and in accordance with the following schedule.

G. Estimated Quantities:

1. Where the estimated quantities are shown for the various classes of work to be done and material to be furnished under this contract, they are approximate and are to be used only as a basis for estimating the

probable cost of the work and for comparing the proposals offered for the work.

2. It is understood and agreed that the actual amount of work to be done and material to be furnished under this contract may differ somewhat from these estimates, and that where the basis for payment under this contract is the unit price method, payment shall be for the actual amount of such work done and the material furnished.

H. The items for which payment is to be made to the Contractor are listed in the Proposal.

3. Reference to any other statements in the Standard Specifications, which refer to additional pay items are hereby deleted.

4. Items shown on the plans for which there is no payment item included in the Bid Proposal shall be considered subsidiary to the other major bid items.

1.2. BID ITEM DESCRIPTION:

See Bid Schedule & Technical Specifications

END OF SECTION

SECTION 01300

SUBMITTALS

PART 1 GENERAL

1.1 SECTION INCLUDES

A. Submit documentation as required by the Contract Documents and as reasonably requested by the Owner and Engineer to:

1. Record the products incorporated into the project for the Owner.

2. Provide information for operation and maintenance of the project.

3. Provide information for the administration of the contract.

4. Allow the Engineer to advise the Owner if products proposed for the project by the Contractor conform, in general, with the design concepts of the contract documents.

B. Contractor's responsibility for full compliance with the contract documents is not relieved by the Engineer's review of submittals. Contract modifications may only be approved by Change Order or Field Order.

1.2 RELATED SECTIONS

A. [Not Used.]

1.3 CONTRACTOR'S RESPONSIBILITIES

A. Review all submittals prior to submission.

B. Determine and verify:

1. Field measurements

2. Field construction requirements

3. The locations of all existing structures, utilities, and equipment related to the submittals.

4. That the submittals are adequately complete for their intended purpose.

5. That conflicts between the submittals related to the various subcontractors and suppliers have been resolved.

6. The quantities and dimensions shown on the submittals.

C. Submit information per the procedures described in this section and the detailed specifications.

D. Furnish the following submittals:

1. As specified in the attached submittal schedule.

2. Schedules, data, and other documentation as described in detail in this section or referenced in the General Conditions.

3. Shop drawings/product data as required for consideration of a contract modification.

4. Submittals as required in the detailed specifications.

E. Submittals not required will be returned without review.

F. Submittals shall be sent to the Engineer allowing a reasonable time for delivery, review, resubmission (if necessary), and final approval of the submittal as well as ordering, fabrication, and delivery of the product.

G. Schedule submittals to provide all information for interrelated work at one time. No review will be performed on submittals requiring coordination with other submittals. The engineer will return the submittals for resubmission as a complete package.

H. Submittals for systems and related equipment shall include information for all of the components required for a complete and operational system.

1. Include electrical, mechanical, and other information required to indicate how the various components of the system function.

2. Where certifications, warranties, and written guarantees are required, they will be provided with the submittal package for review.

I. Fabrication or installation of any products prior to the approval of submittals is done at the Contractor's risk. Products not meeting the requirements of contract documents are defective and may be rejected at the Owner's option.

J. Payment will not be made for products for which submittals are required until the submittals have been received and reviewed.

1.4 QUALITY ASSURANCE

A. Submit legible, accurate, complete documents presented in a clear, easily understood manner. Submittals not meeting this criteria will be returned without review.

B. Demonstrate that the proposed products are in full and complete compliance with the design criteria and requirements of the Contract Documents including drawings and specifications as modified by Addenda, Field Orders, and Change Orders.

C. Furnish and install products that fully comply with the information included in the submittal.

D. Review and approve submittals prior to submitting them to the Engineer for review. Submittals will not be accepted from subcontractors, suppliers, or anyone other than the Contractor.

1.5 SUBMITTAL PROCEDURES

A. Deliver submittals to the Engineer at the following address:

KSA ENGINEERS, INC.
4833 Spicewood Springs Dr.
Suite 204
Austin, Texas 78759

B. Each specific product, class of material, and equipment system shall be submitted separately unless integrally related.

C. Assign a number to the documents originated to allow tracking of the submittal during the review process.

1. Issue sequence numbers in chronological order for each submittal.

2. Issue numbers for resubmittals that have the same number as the original submittal followed by an alphabetical suffix indicating the number of times the same submittal has been sent to the Engineer for processing. For example: 025-A represents the twenty-fifth submittal and is the second time this submittal has been sent for review.

3. Clearly note the submittal number on each page or sheet of the submittal.

D. Submit documents with uniform markings and page sizes.

1. Paper size shall allow for ease of reproduction.

a. Submit documents on 8-1/2" X 11" paper where practical. <u>See page 01300-13 for acceptable format.</u>

b. Use 11" X 17" paper for larger drawings and schematics.

c. Use full size sheets for fabrications and layout drawings.

2. Mark submittals to:

a. Indicate Contractor's corrections.

b. Highlight items pertinent to the products being furnished.

c. Cloud and highlight items where selections by the Engineer or Owner are required.

E. Mark submittals to reference the drawing number and/or section of the specifications, detail designation, schedule, or location that corresponds with the data submitted. Other identification such as layout drawings or schedules may

also be required to allow the reviewer to determine where a particular product is to be used.

F. Submit color charts and samples for every product requiring color, texture, or finish selection.

1. Submit all color charts and samples at one time.

2. Do not submit color charts and samples until all shop drawings/product data for the products have been approved.

3. Submit color charts and samples not less than thirty days prior to when these products are to be ordered or released for fabrication to comply with the schedule for construction of the project.

G. Maintain a log of submissions.

1. Indicate submittal numbers, descriptions, and dates of processing.

2. Periodically compare the Contractor’s log to the Engineer's log to determine that all submittals have been received.

H. The number of copies of each submittal to be sent by the Contractor is a minimum of four for the Engineer plus the number required by the Contractor. However, the number required by the Engineer may vary and is dependent on the location of the project and the number of copies required by the Owner. The total number of copies for the Engineer and Owner will not exceed ten.

1.6 REVIEW PROCEDURES

A. Submittals will be reviewed in the order received.

B. The Contractor may mark submittals as "Priority" for review. The Contractor should use discretion in the use of priority submittals as this may delay the review of submittals previously submitted.

C. Priority submittals will be reviewed before other submittals for this project that have been received but not reviewed.

1.7 SUBMITTAL REQUIREMENTS

A. SHOP DRAWINGS/PRODUCT DATA

1. Shop drawings/product data are requested so that the Engineer can:

a. Assist the Owner in selecting colors, textures, or other aesthetic features.

b. Compare the proposed features of the product with the specified features so as to advise the Owner that the product does, in general, conform to the Contract Documents.

c. Compare the performance features of the proposed product with those specified so as to advise the Owner that it appears that the product will meet the designed performance criteria.

d. Review required certifications, guarantees, warranties, and service agreements for compliance with the Contract Documents.

2. Submit data providing information concerning the general character, style, and manufacture of equipment to allow the Owner to adequately identify the products incorporated into the project and allow replacement or repair in the future.

3. The Contractor shall certify that he has reviewed the shop drawings/product data and made all necessary corrections such that the products, when installed, will be in full compliance with the Contract Documents.

4. Submit shop drawings/product data:

   a. For products indicated in the submittal schedule following this section and in the detailed specifications.

5. Include a complete description of the material or equipment to be furnished. Information is to include:

   a. Type, dimensions, size, arrangement, model number, and operational parameters of the components.

   b. Weights, gauges, materials of construction, external connections, anchors, and supports required.

   c. Performance characteristics, capacities, engineering data, motor curves, and other information necessary to allow a complete evaluation of mechanical components.

   d. All applicable standards such as ASTM or Federal specification numbers.

   e. Fabrication and installation drawings, setting diagrams, manufacturing instructions, templates, patterns, and coordination drawings.

   f. Wiring and piping diagrams and related controls.

   g. Mix designs for concrete, asphalt, or other materials proportioned for the project.

   h. Complete and accurate field measurements for products which must fit existing conditions. Indicate on the submittal that the measurements represent actual dimensions obtained at the site.

6. All required statements of certification, guarantees, extended service agreements, and other related documents are to be provided with the shop drawing/product data. The effective date of these documents shall be the date of acceptance of the work by the Owner.

7. Comments will be made on items called to the attention of the Engineer for review and comment. Any marks made by the Engineer do not constitute a blanket review of the submittal or relieve the Contractor from responsibility for errors or deviations from the contract requirements.

   a. Submittals shall be returned with one or more of the following designations:

      1) Furnish as Submitted - Submittal is found to be acceptable as submitted.

      2) Furnish as Noted - Submittal is acceptable with corrections marked by Contractor or notations made by Engineer and may be used as corrected.

      3) Revise and Resubmit - Submittal has deviations from the contract documents, significant errors, or is inadequate and must be revised and resubmitted for subsequent review.

      4) Rejected - Products are not acceptable.

   b. Drawings with a significant number of markings may be marked "Furnish as Noted" and "Revise and Resubmit". These drawings are to be revised and resubmitted to provide a clean record of the submittal.

B. OPERATION AND MAINTENANCE MANUALS

Submit operation and maintenance manuals for all equipment, mechanical devices, or components described in the contract documents per Section 01730 - Operation and Maintenance Manuals. Include copies of approved shop drawings/product data in the manual.

1.8 REQUESTS FOR DEVIATION

A. Submit requests for deviation from the contract documents for any product or procedure that does not fully comply with the specifications.

B. Requests for deviation that result in a reduction in cost shall include the amount of the cost reduction to the Owner.

C. A Change Order or Field Order will be issued by the Engineer for deviations approved by the Owner. Deviations from the Contract Documents may only be approved by Change Order or Field Order.

1.9 SUBMITTALS FOR SUBSTITUTIONS

A. Substitutions are defined as any product that the Contractor proposes to provide for the project in lieu of the specified product.

B. If the Contractor desires to submit a manufacturer or product that is not specified, the Contractor must submit the following for consideration of approval of the substitution.

1. Provide a request for deviation from the contract documents per paragraph 1.8.

2. Indicate on a point-by-point basis for each specified feature that the product is acceptable to meet the intent of the Contract Documents.

3. Make a direct comparison with the specified manufacturer's published data sheets and available information. Provide this printed material with the submittal.

4. Provide a certification that in making the substitution request, the Contractor:

a. Has determined that the substituted product will perform in substantially the same manner and result in the same ability to meet the specified performance as the specified product.

b. Will provide the same warranties and/or bonds for the substituted product as specified or as would be provided by the manufacturer of the specified product.

c. Will assume all responsibility to coordinate any modifications that may be necessary to incorporate the substituted product into the project and will waive all claims for additional work which may be necessary to incorporate the substituted product into the project which may subsequently become apparent.

d. Will maintain the same time schedule as for the specified product.

5. This information shall be submitted to the Engineer for receipt not later than fourteen (14) days prior to the date of the bid opening. Approval of “Engineer approved equivalent” shall be so stated in a written addendum issued prior to the bid date. Any submission of “Engineer approved equivalent" equipment will not be considered after the deadline listed prior to the bid date including after the project is awarded.

C. This information shall be submitted to the Engineer for receipt not later than fourteen (14) days prior to the date of the bid opening.

D. The engineering cost for review of “or equal” substitutions will be paid by the Contractor.

1. Cost for additional review time will be billed to the Owner by the Engineer for the actual hours required for the review and marking of submittals by Engineer and in accordance with the following rates:

Principal	$90.00
Professional Engineer	$85.00
Graduate Engineer	$65.00
Engineering Technician	$50.00
Administrative Assistant	$30.00

2. The cost for the additional review shall be paid to the Owner by the Contractor on a monthly basis.

E. The Contractor shall be responsible for any additional costs or delays for having furnished materials, equipment, or fixtures other than those specified and shall reimburse the Owner for any increased costs, including but not limited to design and testing, resulting from such substitutions.

F. Prove that the product is acceptable as a substitute. It is not the Engineer's responsibility to prove the product is not acceptable as a substitute.

G. The decision of the Engineer regarding the acceptability of the proposed substitution is final.

1.10 GUARANTEES

A. Warranties and guarantees shall be submitted as required by the contract documents and submitted with the shop drawings/product data.

1.11 RESUBMISSION REQUIREMENTS

A. Make all corrections or changes in the submittals required by the Engineer and resubmit until approved.

B. For Shop Drawings/Product Data

1. Revise initial drawings or data and resubmit as specified for the original submittal.

2. Highlight those revisions which have been made in response to the first review by the Engineer.

3. Highlight any new revisions which have been made or additional details or information that has been added since the previous review by the Engineer.

C. For Samples

1. Submit new samples as required for the initial sample.

2. Remove samples which have been rejected.

D. Engineering cost for excessive review of submittals will be paid by the Contractor.

1. Excessive review of submittals is defined as any review required after the original review has been made and the first resubmittal has been checked to see that corrections have been made.

2. Cost for additional review time will be billed to the Owner by the Engineer for the actual hours required for the review and marking of submittals by the Engineer and in accordance with the rates shown in paragraph 1.9.C.1.

3. Pay cost for the additional review to the Owner on a monthly basis.

E. Need for more than one resubmission or any other delay in obtaining Engineer's review of submittals will not entitle the Contractor to an extension of contract time. All costs associated with such delays shall be at the Contractor's expense.

1.12 ENGINEER'S DUTIES

A. Review the submittals and return within ten days of receipt.

B. Indicate approval, rejection, and the need for resubmittal.

C. Distribute documents.

PART 2 PRODUCTS

[Not Used]

PART 3 EXECUTION

[Not Used]

SUBMITTAL SCHEDULE

A. SECTION 02205 – SOIL MATERIALS

- ☐ Product data sheet on all soil materials imported from offsite
- ☐ Submit, in air–tight containers, 10 lb. sample of each type of fill to testing laboratory. All off-site materials must be approved by the Engineer prior to installation.

B. SECTION - 02207 AGGREGATE MATERIALS

- ☐ Product data sheet on all aggregates and riprap to be used in the project
- ☐ Submit, in air-tight containers, 10 lb. sample of each type of material to testing laboratory. Materials must be approved by the Engineer prior to installation.

C. SECTION - 02370 EROSION CONTROL FABRIC

- ☐ Product data sheet on erosion control fabric and staples
- ☐ Submit 8” x 8” sample if not by pre-approved supplier and product data sheets for materials to be used.

D. SECTION - 02375 FILTER FABRIC FENCE

- ☐ Manufacturer's catalogue sheets and other pertinent information on geotextile fabric.

E. SECTION - 02936 SEEDING

- ☐ Product Data: Manufacturer's product data sheets on all materials incorporated into work including
  - ☐ Seed mixture
  - ☐ Soil material
  - ☐ Hydromulch or hydroseeding material
  - ☐ Any accessories anticipated including liquid lime, mulching material, plaster/cellulose fiber mulch, and fertilizer

F. SECTION – TxDOT 420 CONCRETE

- ☐ Submit mix designs for all concrete mixes to be used on the project. Submit mix designs as shop drawings in accordance with Section 01300 – Submittals a minimum of 30 days before their use in the project.

- ☐ Submit the following under provisions of Section 01300 – Submittals.

  - ☐ Product data sheets on joint devices, attachment accessories, admixtures, and bonding agents.

  - ☐ Manufacturer's installation instructions.

  - ☐ Test data on proposed design mixes for each type of concrete to be used in the project to verify that the Specification requirements are met or exceeded.

- ☐ Project Record Documents

  - ☐ Submit under provisions of Section 01700 – Contract Closeout

  - ☐ Accurately record actual locations of embedded utilities and components which are concealed from view.

G. SECTION – TxDOT 420 CONSTRUCTION JOINTS AND WATERSTOPS

- ☐ Product Data: Materials listed in this specification including any proposed waterstops and construction joints used in this project

- ☐ Manufacturer's specifications and other data needed to prove compliance with the specified requirements.

SAMPLE

SHOP DRAWING COVER SHEET

(ATTACHED TO ALL SHOP DRAWINGS & SUBMITTALS)
(USED FOR REVIEW STAMP & COMMENTS)

NAME OF PROJECT

Transmittal No.		Date:	
Description:		Spec Section Reference:	
Supplier:			

CONTRACTOR REVIEW STAMP	KSA ENGINEERS REVIEW STAMP
CONTRACTOR COMMENTS	
KSA COMMENTS	

END OF SECTION

SECTION 01400

QUALITY CONTROL

PART 1 GENERAL

1.1 SECTION INCLUDES

Furnish labor, materials, and equipment as required to demonstrate that the work conforms to the Contract Documents.

1.2 RELATED SECTIONS

A. 09800 – Protective Coatings.

B. 02607 – Manholes and Covers

C. 02665 – Water Systems

D. 02667 – Site Water and Wastewater Lines

E. 02730 – Pressurized Sanitary Sewer Systems

1.3 REFERENCES

A. ASTM C828.

B. ASTM C924.

C. ASTM D3034 – Standard Specification for Type PSM Poly(Vinyl Chloride) (PVC) Sewer Pipe and Fittings

D. AWWA C600.

E. 30 Texas Administrative Code Chapter 217 Design Criteria for Domestic Wastewater Systems

1.4 SUBMITTALS

Reports of all tests (passing and failing) required by this and all other specification sections shall be submitted to the Engineer.

1.5 CONTRACTOR'S RESPONSIBILITIES

A. Control the quality of work produced and verify that the work performed meets the standards of quality established in the contract documents.

1. Inspect the work performed by the Contractor, subcontractors, and suppliers. Correct defective work.

2. Inspect products to be incorporated into the project. Provide only those products that comply with the Contract Documents.

3. Verify conformance of the work and products with the contract documents before notifying the Owner of need for testing.

4. Provide consumable construction materials of adequate quality to provide a finished product that complies with the Contract Documents.

5. Provide and pay for the services of an approved professional materials testing laboratory if necessary to insure that products proposed for use fully comply with the Contract Documents.

6. Perform tests as indicated in this and other sections of the specifications. Schedule the time and sequence of testing with the Owner and Engineer. Testing is to be observed by the Owner and Engineer or their designated representatives.

7. Provide labor, materials, tools, equipment, and related items for testing by the Owner including, but not limited to, temporary construction required for testing and operation of new and existing utilities.

B. Assist the Engineer, Owner, and Owner's testing organization to perform quality assurance activities.

1. Provide access to the work and to the manufacturer's operations at all times work is in progress.

2. Cooperate fully in the performance of sampling, inspection, and testing.

3. Furnish labor and facilities to:

a. Provide access to the work to be tested.

b. Obtain and handle samples for testing at the project site or at the source of the product to be tested.

c. Facilitate inspections and tests.

d. Store and cure test samples.

4. Furnish copies of the tests performed on products.

5. Provide adequate quantities of representative product to be tested to the laboratory at the designated location.

6. Give the Owner adequate notice before proceeding with work that would interfere with testing.

7. Notify the Engineer and the testing laboratory prior to the time that testing is required. Lead time is to be adequate to allow arrangements to be made for testing.

8. Do not proceed with any work until testing services have been performed and results of tests indicate that the work is acceptable.

9. Provide complete access to the site and make contract documents available.

10. Provide personnel and equipment needed to perform sampling or to assist in making the field tests.

11. Testing performed by the Owner will be paid for by the Owner.

C. Should requirements of this section of the specifications conflict with the requirements of the detailed specifications, the more strict specification shall govern.

1.6 QUALITY ASSURANCE ACTIVITIES BY THE OWNER

Quality assurance activities of the Owner and Engineer through their own forces or through contracts with materials testing laboratories and survey crews are for the purpose of monitoring the results of the Contractor's work to see that it is in compliance with the requirements of the Contract Documents.

A. Quality assurance activities of the Owner and Engineer in no way relieve the Contractor of the obligation to perform work and furnish products and constructed work conforming to the Contract Documents.

B. Failure on the part of the Owner or Engineer to test products or constructed works in no way relieves the Contractor of the obligation to perform work and furnish materials conforming to the Contract Documents.

1.7 DELIVERY, STORAGE, AND HANDLING

Handle and protect test specimens of products and construction materials at the construction site in accordance with recognized test procedures.

1.8 VERIFICATION TESTING

A. Provide verification testing when tests performed by the Owner indicate that materials or the results of construction activities are not in conformance with Contract Documents.

B. Verification testing is to be provided at the Contractor's expense to verify products or constructed works are in compliance after corrections have been made.

C. Tests must comply with recognized methods or with methods recommended by the Owner's testing laboratory and approved by the Engineer.

1.9 NON-CONFORMING WORK

A. Immediately correct any work that is not in compliance with the contract documents or submit a written explanation of why the work is not to be corrected immediately and when the corrective work will be performed.

B. Payment for non-conforming work shall be withheld until work is brought into compliance with the Contract Documents.

1.10 LIMITATION OF AUTHORITY OF THE TESTING LABORATORY

A. The testing laboratory representatives are limited to providing consultation on the test performed and in an advisory capacity.

B. The testing laboratory is not authorized to:

1. Alter the requirements of the Contract Documents.

2. Accept or reject any portion of the work.

3. Perform any of the duties of the Contractor.

4. Stop the work.

PART 2 PRODUCTS

Furnish testing apparatus and related accessories necessary to perform the tests.

PART 3 EXECUTION

3.1 PIPING SYSTEMS

A. TEST REQUIREMENTS (ALL PIPING)

1. Perform tests on piping systems including piping installed between structures or connected to existing pipe.

2. Conduct tests on buried pipe to be hydrostatically tested after the trench is completely backfilled. If field conditions permit and if approved by the Engineer, partially backfill the trench and leave the joints open for inspection and conducting of the initial service leak test. Do not conduct the acceptance test until backfilling is complete.

3. Conduct the test on exposed piping after the piping is completely installed, including supports, hangers, and anchors, but prior to insulation.

4. Do not perform testing on pipe with concrete thrust blocking until the concrete has cured for at least five days.

5. Determine and remedy the cause of excessive leakage for any pipe failing to meet the specified requirements for water or air tightness.

6. Tests must be successfully completed and reports filed before piping is accepted.

7. Submit the plan for testing to the Engineer for review at least 10 days before starting the test.

8. Remove and dispose of temporary blocking material and equipment after completion and acceptance of the piping test.

9. Repair any damage to the pipe coating.

10. Clean pipelines so they are totally free flowing prior to final acceptance.

11. Test piping independently from tests on structures.

12. Test method and test pressure depend upon the application of the piping.

    a. Pressure pipe is defined as piping that is part of a pumped or pressurized system. Perform testing for pressure pipe per the procedures indicated in paragraph B of this section.

    b. Gravity pipe is defined as piping that depends upon the force of gravity for flow through the pipe. Perform testing for gravity pipe per the procedures indicated in paragraph C, D, or E of this section.

    c. Chemical processing lines are to be tested as pressure pipe regardless of the operating conditions. The test pressure is to be 1.5 times the pressure rating of the pipe.

B. PRESSURE AND LEAKAGE TESTS OF PRESSURE PIPING

1. Leakage tests shall be performed on all water distribution system piping and pressure rated sewer piping (ASTM 2241).

2. Perform hydrostatic pressure and leakage tests using methods and per performance requirements of Section 4 of AWWA C600.

    a. The pressure required for the hydrostatic pressure test shall be 50 percent above the normal working pressure. If the normal working pressure cannot be determined, use the pipe pressure rating as the normal working pressure.

    b. Provide temporary plugs and blocking necessary to maintain the required test pressure. Where piping is cast in the walls for a structure, brace the walls prior to testing as required to prevent load of test pressure from being imposed upon the structure.

    c. Provide corporation cocks at least ¾ inch in diameter, pipe riser, and angle globe valves at each pipe dead-end in order to bleed air from the line.

    d. The duration of the pressure test shall be at least 24 hours.

3. Perform a separate leakage test after the pressure test.

   a. Perform the test at the maximum operating pressure as determined by the Engineer for a duration of not less than two hours.

   b. Repair any visible leaks regardless of the total leakage shown by the test.

   c. Repair pipelines which fail to meet the test and retest as necessary until the results conform to the test requirements.

   d. Remove and replace defective materials, pipes, valves, and accessories.

   e. Test the pipelines in sections by shutting valves or installing temporary plugs as necessary.

   f. Fill the pipeline with water and remove the air.

   g. Maintain the test pressure in the pipe for the entire test period by means of a force pump.

   h. Accurately measure the water required to maintain the pressure. The amount of water required is a measure of the leakage.

      The maximum allowable leakage is determined by the following formulas.

      Ductile Iron Pipe

$$L = \frac{SD(P)^{1/2}}{133{,}200}$$

      L is the allowable leakage in gallons per hour.
      S is the length of pipe tested in feet.
      D is the nominal diameter of the pipe in inches.
      P is the test pressure in pounds per square inch gauge.

      PVC Pipe

$$L = \frac{ND(P)^{1/2}}{7{,}400}$$

      L is the allowable leakage in gallons per hour.
      N is the number of joints in the length of line tested.
      D is the nominal diameter of the pipe in inches.
      P is the test pressure in pounds per square inch gauge.

      Leakage is defined as the volume of water provided to maintain the test pressure after the pipe has been filled with water, the air expelled, and the pipe brought to test pressure.

4. Pipe with visible leaks or leakage exceeding the maximum allowable leakage is considered defective and must be corrected.

C. INFILTRATION AND EXFILTRATION TEST (SEWAGE PIPING):

1. Infiltration and Exfiltration tests shall conform to 30 TAC 217.57(a)(2) and shall be performed under the observation of the Owner and Engineer.

2. If an Infiltration or Exfiltration Test produces results that exceed the maximum allowable limit as stated in 30 TAC 217.57 (a)(2) and as outlined below, the Contractor shall repair or replace all necessary sections of the sewer line to bring the line into compliance with such standards.

3. The total infiltration shall not exceed 50 gallons per inch diameter per mile of pipe per 24 hours at a minimum test head of 2.0 feet above the crown of the pipe at the upstream manhole or two feet above the existing ground water whichever is greater.

4. When pipes are installed below the groundwater level, an infiltration test shall be used in lieu of an Exfiltration test.

5. For pipe constructed within the 25-year flood plain, the Infiltration or Exfiltration shall not exceed 10 gallons per inch diameter per mile of pipe per 24 hours at a minimum test head of 2.0 feet.

6. If the exfiltration exceeds the maximum allowable amount, the Contractor shall replace or repair the section of the sewer line necessary to meet the specified limits.

D. DEFLECTION TEST (SEWAGE PIPING):

1. A Deflection Test shall be performed on all flexible pipes (PVC).

2. The deflection test shall conform to the requirements of 30 TAC 217.57(b) as outlined below.

3. For collection pipes with an inside diameter less than 27 inches, deflection measurement requires a Rigid Mandrel. Flexible mandrels shall be prohibited.

   a. The Rigid Mandrel shall have an outside diameter equal to 95% of the average inside diameter of the pipe.

   b. The Rigid Mandrel shall be constructed of metal or a rigid plastic material and shall be able to withstand 200 psi without being deformed and shall have a length of at least 75% of the inside diameter of the pipe.

   c. The Mandrel shall have 9 or more odd number of runners.

d. Each Mandrel shall use a separate proving ring.

e. The Mandrel shall have 9 or more odd number of runners.

4. Television Inspection shall not substitute for a Deflection Test.

5. Mechanical pulling devices shall not be used during Testing.

6. Deflection Tests shall be performed no sooner than 30 days following final placement of backfill.

7. If the deflection exceeds the maximum allowable amount (5%), the Contractor shall replace or repair the section of the sewer line necessary to meet the specified limits.

E. HYDROSTATIC LEAK TEST OF GRAVITY PIPING (SEWAGE PIPING)

1. Perform hydrostatic leak tests after backfilling.

2. The length of the pipe to be tested shall be such that the head over the crown of the upstream end is not less than two feet and the head over the downstream crown is not more than six feet.

3. Plug the pipe by pneumatic bags or mechanical plugs so that the air can be released from the pipe while it is being filled with water.

4. Continue the test for one hour and make provisions for measuring the amount of water required to maintain the water at a constant level during this period.

5. Repair any visible leaks regardless of the total leakage shown by the test.

6. Remove the jointing material and remake the joint if any joint shows any visible leakage or infiltration.

7. Remove and replace any defective or broken pipes.

8. Determine the maximum allowable leakage or infiltration by the following formula.

$$L = \frac{200\ DS}{126{,}720}$$

L is the allowable leakage in gallons per day.
S is the length of pipe tested in miles.
D is the nominal diameter of the pipe in inches.

9. Determine the rates of infiltration by means of V-notch weirs, pipe spigot, or plugs in the end of the pipe. Methods, times, and locations are subject to the Engineer's approval.

10. Pipe with visible leaks or infiltration or which exceeds the maximum allowable leakage or infiltration is considered defective and must be corrected.

F. LOW-PRESSURE AIR TEST

1. Use the air test in lieu of the hydrostatic test if desired or if pipeline grades do not allow filling the entire pipeline segment or manhole to the indicated depth.

2. Perform low-pressure air tests using equipment specifically designed and manufactured for the purpose of testing sewer pipelines using low-pressure air. The test is to conform to procedures described in ASTM C828, ASTM C924, or other Engineer approved procedures.

   a. Provide equipment with an air regulator valve or air safety valve set to an internal air pressure in the pipeline that cannot exceed six psig.

   b. Pass air through a single control panel.

   c. Provide pneumatic plugs that have a sealing length equal to or greater than the circumference of the pipe to be tested.

   d. Provide pneumatic plugs that resist internal test pressures without requiring external bracing or blocking.

   e. Provide an air compressor of adequate capacity for charging the system.

3. Perform air test only on lines less than 36 inches diameter. Air tests for pipes larger than 36 inches may be tested at each joint.

4. Check connections for leakage with a soap solution. If leaks are found, release the air pressure, repair the leak, and retest with soap solution until results are satisfactory before resuming the air test.

5. Determine the maximum allowable time for the pressure to drop from 3.5 pounds per square inch to 2.5 pounds per square inch.

$$T \equiv \frac{0.085 \times D \times K}{Q}$$

T is the time for the pressure to drop 1.0 pound per square inch gauge in seconds.
K is 0.000419DL, but not less than 1.0.
D is the average inside diameter in inches.
L is the length of line of the same pipe size in feet.
Q is the rate of loss (use 0.0015).
Since a K value of less than 1.0 shall not be used, there are minimum testing times for each pipe diameter as follows:

Pipe Diameter (Inches)	Minimum Time (seconds)	Length for Minimum Time (feet)	Time for Longer Length (seconds)
6	340	398	0.855(L)
8	454	298	1.520(L)
10	567	239	2.374(L)
12	680	199	3.419(L)
15	850	159	5.342(L)
18	1020	133	7.693(L)
21	1190	114	10.471(L)
24	1360	100	13.676(L)
27	1530	88	17.309(L)
30	1700	80	21.369(L)
33	1870	72	25.856(L)

The test may be stopped if no pressure loss has occurred during the first 25% of the calculated testing time. If any pressure loss or leakage has occurred during the first 25% of the testing period, then the test shall continue for the entire test duration as outlined above or until failure.

G. *Upon completion of all required testing, the contractor shall provided a signed and notarized affidavit certifying that the system has been tested and meets applicable requirements.*

3.2 Manholes and Covers (See section 02607 for Manhole specifications)

A. Manholes shall be tested for leakage separately and independently of the wastewater lines by hydrostatic exfiltration testing, vacuum testing, or other approved method.

B. The maximum leakage for hydrostatic testing shall be 0.025 gallons per foot diameter per foot of manhole depth per hour. Alternate test methods must ensure compliance with the above allowable leakage.

C. Hydrostatic exfiltration testing shall be accomplished by sealing all wastewater lines coming into the manhole with an internal pipe plug.

1. The manhole shall then be filled with water and maintained for at least one hour.

2. For concrete manholes a wetting period of 24 hours may be used prior to testing in order to allow saturation of the concrete.

D. Vacuum testing:

1. Preparation of the Manhole.

a. All lift holes and exterior joints shall be plugged with a non-shrink grout.

b. All pipes entering the manhole shall be temporally plugged, taking care to securely brace the pipes and plugs to prevent them from being drawn into the manhole.

2. Procedure.

a. The test head shall be placed at the top of the manhole in accordance with the manufacturer's recommendations.

b. A vacuum of 10 in. of mercury shall be drawn on the manhole, the valve on the vacuum line of the test head closed, and the vacuum pump shut off.

c. The manhole shall pass if after 2.0 minutes and with all valves closed, the vacuum is at least 9.0 inches of mercury. (The test shall not begin until after the vacuum pump is off.)

d. If the manhole fails the initial test, necessary repairs shall be made by an approved method. The manhole shall then be retested until a satisfactory test is obtained.

E. If a manhole fails a leakage test, the manhole must be made watertight and retested at the Contractor's expense.

F. Testing shall meet the requirements of 30 TAC 217.58(b)(2).

G. *Upon completion of all required testing, the contractor shall provided a signed and notarized affidavit certifying that the system has been tested and meets applicable requirements.*

3.3 PROTECTIVE COATINGS (See section 09800 for coating specifications)

A. Thickness and Holiday Checking (Steel Surfaces): Thickness of coatings shall be checked with a non-destructive, magnetic-type thickness gauge. Use as instrument such as a Tooke Gauge if a destructive tester is deemed necessary. The integrity of coated surfaces shall be checked with an approved inspection device. Non-destructive holidays shall not exceed 67½ volts nor shall destructive holiday detectors exceed the voltage recommended by the manufacturer of the coating system. For thickness between 10 and 20 mils, use a non-sudsing type wetting agent, such as Kodak Photo-Flow. Failures shall be marked, repaired in accordance with the manufacturer's printed recommendations and retested. No pinholes or other irregularities will be permitted in the final coating.

B. Inspection Devices: The contractor shall furnish, until final acceptance of coating and painting, inspection devices in good working condition for detection of holidays and measurement of dry film thickness (dft) of coating. The Contractor shall also furnish U.S. Department of Commerce, National Bureau of Standards

certified thickness calibration plates to test accuracy of dft gauges and certified instrumentation to test accuracy of holiday detector. Dry film thickness gauges and holiday detectors shall be made available for the Engineer's use at all times until final acceptance of application. Holiday detection devices shall be operated in the presence of the Engineer.

C. Warranty Inspection: Warranty inspection shall be conducted one month prior to the end of the warranty period for all coating and painting work. All defective work shall be repaired in accordance with this specification and to the satisfaction of the Engineer/Owner.

D. *Upon completion of all required testing, the contractor shall provided a signed and notarized affidavit certifying that the system has been tested and meets applicable requirements.*

3.4 LEAKAGE TESTS FOR STRUCTURES

A. Test structures that will contain water on a full time or intermittent basis for leaks. Perform tests prior to installing equipment or materials within the basins. In the event that the basins fail to pass the test, drain the basin, repair the leaks, re-fill, and re-test the basin. Repeat tests until the basin passes the test. The Owner may repeat the test at any time during the two (2) year guarantee period or time period stated as the warranty period.

B. Test the basin for leakage using the following procedure:

1. Determine the evaporation allowance for loss of water.

   a. Use a standard circular pan procedure established by the U.S. Weather Bureau to measure evaporation rate.

   b. Calculate evaporation allowance by multiplying the evaporation rate in gallons per 24 hours per square foot of surface area by the open surface area of the water in the basin.

2. Calculate the allowable leakage for the basin. Allowable leakage is 0.03 gallons per square foot of concrete area in contact with the water per 24 hours.

3. Fill the basin to the overflow level with water at a rate not to exceed two vertical feet per hour.

4. Allow the water to stand in the basin for three days.

5. Observe the perimeter of the basin and identify all leaks.

6. Repair basin walls and floors where leaks have been identified.

7. Mark the water level at the basin wall. Measure the fall in water level over a 24 hour period to the nearest 1/8 inch at least twice a day to

determine the quantity of water lost. Provide a stilling well for measurement if required to allow accurate measurement.

8. Calculate the amount of water lost during this time period.

9. Compare the amount of water lost to the allowable loss.

C. Drain the basin, determine the sources of leakage and repair if the amount of water lost exceeds the allowable leakage plus the evaporation allowance.

D. Owner will pay for water used during the first test. Contractor responsible for purchase of water used in any subsequent tests.

E. For drinking water projects, water used for the leakage test shall meet requirements to be sent into distribution system. Contractor shall pay for any water that is unable to be sent into the distribution system due to inadequate water quality.

F. *Upon completion of all required testing, the contractor shall provided a signed and notarized affidavit certifying that the system has been tested and meets applicable requirements.*

3.5 Concrete

A. Laboratory Testing: The Owner shall engage an independent testing laboratory to conduct concrete tests. Unless otherwise informed the Contractor will be responsible for sampling concrete for test cylinders, recording, providing all materials required, and for making all slump tests in the field directed by the Engineer. All costs in connection with work performed by the laboratory will be paid by the Owner. The Contractor shall be responsible for the costs of work performed by the laboratory required for redesign of concrete when cylinders indicate low strength concrete has occurred.

At least one test shall be made on fresh concrete for each 60 cubic yards of each class of concrete (or fraction thereof) placed on any one day and in any event, not less than one test for each class of concrete each day it is used. Testing shall be done in accordance with the following ASTM Specifications, latest edition:

C172,	Standard Method of Sampling Fresh Concrete
C31,	Standard Method of Making and Curing Concrete Compression & Flexure Test Specimens in the Field
C39,	Standard Method of Test of Compressive Strength of Molded Concrete Cylinders
C143,	Standard Method of Slump Test for Consistency of Portland Cement Concrete

Before any concrete is poured, the Contractor shall construct a storage box in accordance with ASTM Specification C31. Each set of tests shall consist of one slump test and three compression test cylinders. All cylinders shall be kept in

the storage box for the first 24 hours. The three cylinders shall be laboratory cured and tested for adequacy of the design for strength of the concrete in accordance with ASTM Specification C31. One cylinder shall be tested at seven days and two at twenty-eight days.

B. Failure of Concrete to Meet Strength Requirements: The concrete shall be considered acceptable if, for any one class of concrete, the average of all tests or any five consecutive tests is equal to or greater than the specified strength, provided that no more than one test of the five falls between 90 percent and 100 percent of the specified strength. The only cylinders to be used for determination of concrete acceptability will be those laboratory cured and tested at twenty-eight days. When it appears the tests of laboratory-cured cylinders will fail to meet these requirements, the Engineer may require changes in the proportions of concrete for the remainder of the work in order to meet the strength requirements. In addition, the Engineer may also require additional curing not to exceed a total of twenty-one days on portions of the concrete already poured.

The Engineer may also require tests in accordance with Methods of Securing, Preparing and Testing Specimen from Hardened Concrete for Compressive and Flexural Strengths (ASTM Specifications C42) when the concrete cylinder tests fail to meet strength requirements. In the event there still is question as the quality of the concrete in the structure, the Engineer may require load tests for that portion where the questionable concrete has been placed. Such load tests will be made as outlined in Chapter 20 of American Concrete Institute Building Code. (ACI 318-71), and shall be at the expense of the Contractor.

C. Removal of Under Strength Concrete: If the above tests indicate that a particular batch of previously placed concrete is under strength, the Engineer may direct that the under strength batch be removed and replaced. The removal of the under strength concrete shall also include the removal of concrete that has obtained the required strength if the Engineer deems this necessary to obtain structural or visible continuity when the concrete is replaced.

The removal, and replacement of any under strength concrete, shall be made at no additional cost to the Owner. This shall include any new formwork required or any reinforcing steel that may be required. The Owner shall not be charged any additional costs for any extra work that is required because of the failure of any concrete to meet the minimum test requirements.

3.6 Compaction Under Tanks, Structures, and Concrete

A. Owner to conduct in-place field density tests at the minimum rate of one 1 test per 2,000 square feet for every other lift. Failed tests shall be retested at Contractor's expense. Engineer will designate locations for additional testing if in his opinion such tests are needed to verify compliance with the specifications

3.7 Mechanical, Electrical, and Instrumentation

All materials, equipment, installation and workmanship included in this contract shall be tested and inspected to prove compliance with the contract requirements. No tests specified herein shall be applied until the item to be tested has been inspected and

approval given for the application of such test by an authorized representative of the manufacturer of the equipment.

A. General Requirements: Tests and inspection shall include:

(1) The delivery acceptance tests and inspections.

(2) The installed tests and inspections of items as installed.

Tests and inspections, unless otherwise specified or accepted, shall be in accordance with the recognized standards of the industry.

The form of evidence of satisfactory fulfillment of delivery acceptance test and of installed test and inspection requirements shall be, at the discretion of the Engineer, either by tests and inspections carried out in his presence or by certificates or reports of tests and inspections carried out by approved persons or organizations.

B. Delivery Acceptance Tests and Inspections: The delivery acceptance tests and inspections shall be at the Contractor's expense for any materials or equipment specified herein and shall include the following:

(1) Test of items during the process of manufacture and/or on completion of manufacture, comprising material tests, hydraulic pressure tests, electric tests, performance and operating tests and inspections in accordance with the relevant standards of the industry and more particularly as detailed in individual clauses of these specifications, or as may be required by the Engineer to satisfy himself that the items tested and inspected comply with the requirements of this contract.

(2) Inspection of all items delivered at the site in order that the Engineer may be satisfied that such items are of the specified quality and workmanship and are in good order and condition at the time of delivery.

C. Installed Tests and Inspection: All mechanical, electrical, and instrumentation equipment shall be tested by the Contractor installing the equipment to the satisfaction of the Engineer before any facility is put into operation. Tests shall be as specified herein and shall be made to determine whether the equipment has been properly assembled, aligned, adjusted and connected. Any changes, adjustments or replacements required to make the equipment operate as specified shall be carried out by the Contractor as part of the work.

At least 60 days before the time allowed in his construction schedule for commencing testing and start-up procedures, the Contractor shall submit to the Engineer, in duplicate, details of the procedures he proposes to adopt for testing and start-up of all mechanical, electrical, and instrumentation equipment to be operated singly and together, excepting when such procedures have been covered in the specifications. Such tests shall be conducted using clear water. The water required for such tests shall be provided by the Contractor.

During the testing of mechanical, electrical, and instrumentation equipment, the Contractor shall make available experienced factory trained representatives of the manufacturers of all the various pieces of equipment, or other qualified persons who shall instruct the Owner's personnel in the operation and care thereof. Instruction shall include step-by-step troubleshooting procedures with all necessary test equipment and a presentation in accordance with "General Outline for Manufacturer Presentations" included at the end of this section.

If under test, any portion of the work shall fail to fulfill the contract requirements and is altered, renewed or replaced, tests on that portion when so altered, removed or replaced, together with all other portions of the work as are affected thereby, shall if so required by the Engineer, be repeated within reasonable time and in accordance with the specified conditions and the Contractor shall pay to the Owner all reasonable expenses incurred by the Owner as a result of the carrying out of such tests.

Where, in the case of an otherwise satisfactory installed test, any doubt, dispute or difference should arise between the Engineer and the Contractor regarding the test results or the methods or equipment used in the carrying out by the Contractor of such test, then the Engineer may order the test to be repeated. If the repeat test using such modified methods or equipment as the Engineer may require substantially confirms the previous test, then all costs in connection with the repeat test will be paid by the Owner, otherwise the costs shall be borne by the Contractor.

Where the results of any installed test fail to comply with the contract requirements for such test, then such repeat tests as may be necessary to achieve the contract requirements shall be made by the Contractor at his own expense.

END OF SECTION

SECTION 01410

TESTING SERVICES

PART 1 GENERAL

1.1 SECTION INCLUDES

A. Selection and Payment

B. Quality Assurance

C. Agency Responsibilities

D. Agency Reports

E. Limits on Testing Authority

F. Contractor Responsibilities

G. Schedule of Tests

1.2 RELATED SECTIONS

A. Section 01300 - Submittals: Manufacturer's certificates.

B. Section 01650 - Starting of Systems.

C. Section 01700 - Contract Closeout: Project record documents.

1.3 REFERENCES

A. ASTM C802 - Practice for Conducting an Interlaboratory Test Program to Determine the Precision of Test Methods for Construction.

B. ASTM C1021 - Practice for Laboratories Engaged in the Testing of Building Sealants.

C. ASTM C1077 - Practice for Laboratories Testing Concrete and Concrete Aggregates for Use in Construction and Criteria for Laboratory Evaluation.

D. ASTM C1093 - Practice for Accreditation of Testing Agencies for Unit Masonry.

E. ASTM D290 - Recommended Practice for Bituminous Mixing Plant Inspection.

F. ASTM D3740 - Practice for Evaluation of Agencies Engaged in Testing and/or Inspection of Soil and Rock as Used in Engineering Design and Construction.

G. ASTM D4561 - Practice for Quality Control Systems for an Inspection and Testing Agency for Bituminous Paving Materials.

H. ASTM E329 - Practice for Use in the Evaluation of Inspection and Testing Agencies as Used in Construction.

I. ASTM E543 - Practice for Determining the Qualification of Nondestructive Testing Agencies.

J. ASTM E548 - Practice for Preparation of Criteria for Use in the Evaluation of Testing Laboratories and Inspection Bodies.

K. ASTM E699 - Practice for Criteria for Evaluation of Agencies Involved in Testing, Quality Assurance, and Evaluating Building Components in Accordance with Test Methods Promulgated by ASTM Committee E6.

1.4 SELECTION AND PAYMENT

A. Owner will employ and pay for services of an independent testing agency or laboratory to perform specified testing.

B. Employment of testing agency or laboratory in no way relieves Contractor of obligation to perform Work in accordance with requirements of Contract Documents.

1.5 QUALITY ASSURANCE

A. Laboratory: Authorized to operate in State in which Project is located.

B. Laboratory Staff: Maintain a full time registered Engineer on staff to review services.

C. Testing Equipment: Calibrated at reasonable intervals with devices of an accuracy traceable to either National Bureau of Standards or accepted values of natural physical constants.

1.6 AGENCY RESPONSIBILITIES

A. Test samples of mixes submitted by Contractor.

B. Provide qualified personnel at site. Cooperate with Engineer and Contractor in performance of services.

C. Perform specified sampling and testing of Products in accordance with specified standards.

D. Ascertain compliance of materials and mixes with requirements of Contract Documents.

E. Promptly notify Engineer and Contractor of observed irregularities or non-conformance of Work or Products.

F. Perform additional tests required by Engineer.

G. Attend preconstruction meetings and progress meetings.

1.7 AGENCY REPORTS

A. After each test, promptly submit two copies of report to Engineer and to Contractor.

B. Include:

1. Date Issued

2. Project Title and Number

3. Name of Inspector

4. Date and Time of Sampling or Inspection

5. Identification of Product and Specifications Section

6. Location in the Project

7. Type of Inspection or Test

8. Date of Test

9. Results of Tests

10. Conformance with Contract Documents

C. When requested by Engineer, provide interpretation of test results.

1.8 LIMITS ON TESTING AUTHORITY

A. Agency or laboratory may not release, revoke, alter, or enlarge on requirements of Contract Documents.

B. Agency or laboratory may not approve or accept any portion of the Work.

C. Agency or laboratory may not assume any duties of Contractor.

D. Agency or laboratory has no authority to stop the Work.

1.9 CONTRACTOR RESPONSIBILITIES

A. Deliver to agency or laboratory at designated location, adequate samples of materials proposed to be used which require testing, along with proposed mix designs.

B. Cooperate with laboratory personnel, and provide access to the Work and to manufacturers' facilities.

C. Provide incidental labor and facilities:

1. To provide access to Work to be tested.

2. To obtain and handle samples at the site or at source of Products to be tested.

3. To facilitate tests.

4. To provide storage and curing of test samples.

D. Notify Engineer and laboratory 24 hours prior to expected time for operations requiring testing services.

1.10 SCHEDULE OF TESTS

A. Individual Specification Sections: Tests required and standards for testing.

2 PART 2 PRODUCTS

Not Used.

3 PART 3 EXECUTION

Not Used.

END OF SECTION

SECTION 01500

CONSTRUCTION FACILITIES AND TEMPORARY CONTROLS

PART 1 GENERAL

1.1 SECTION INCLUDES

A. Temporary Utilities: Electricity, telephone service, water, and sanitary facilities.

B. Temporary Controls: Barriers, enclosures and fencing, protection of the Work, and water control.

C. Construction Facilities: Access roads, parking, progress cleaning, project signage, and temporary buildings.

1.2 TEMPORARY ELECTRICITY

A. Cost: By Contractor; provide and pay for power service required from utility source.

B. Complement existing power service capacity and characteristics as required.

C. Provide power outlets for construction operations, with branch wiring and distribution boxes located at each floor as required. Provide flexible power cords as required.

D. Provide main service disconnect and over-current protection at convenient location. Feeder switch at source distribution equipment meter.

1.3 TEMPORARY LIGHTING FOR CONSTRUCTION PURPOSES

A. Provide and maintain incandescent lighting for construction operations to achieve a minimum lighting level of 2 watts/square foot.

B. Provide and maintain 1 watt/square foot lighting to exterior staging and storage areas after dark for security purposes.

C. Provide and maintain 0.25 watt/square foot H.I.D. lighting to interior work areas after dark for security purposes.

D. Provide branch wiring from power source to distribution boxes with lighting conductors, pigtails and lamps as required.

E. Maintain lighting and provide routine repairs.

F. Permanent building lighting may not be utilized during construction.

1.4 TEMPORARY WATER SERVICE

A. Provide, maintain, and pay for suitable quality water service required for construction operations at time of project mobilization.

B. Extend branch piping with outlets located so water is available by hoses with threaded connections.

1.5 TEMPORARY SANITARY FACILITIES

A. Provide and maintain required facilities and enclosures at time of project mobilization.

1.6 FENCING

A. Construction: Commercial grade chain link fence.

B. Provide six (6) foot high fence around construction site; equip with vehicular and pedestrian gates with locks.

1.7 WATER CONTROL

A. Grade site to drain. Maintain excavations free of water. Provide, operate, and maintain pumping equipment.

B. Protect site from puddling or running water. Provide water barriers as required to protect site from soil erosion.

1.8 EXTERIOR ENCLOSURES

A. Provide temporary weather tight closure of exterior openings to accommodate acceptable working conditions and protection for Products, to allow for temporary heating and maintenance of required ambient temperatures identified in individual specification sections, and to prevent entry of unauthorized persons. Provide access doors with self-closing hardware and locks.

1.9 PROTECTION OF INSTALLED WORK

A. Protect installed Work and provide special protection where specified in individual specification sections.

B. Provide temporary and removable protection for installed Products. Control activity in immediate work area to prevent damage.

C. Provide protective coverings at walls, projections, jambs, sills, and soffits of openings.

D. Protect finished floors, stairs, and other surfaces from traffic, dirt, wear, damage, or movement of heavy objects, by protecting with durable sheet materials.

E. Prohibit traffic or storage upon waterproofed or roofed surfaces. If traffic or activity is necessary, obtain recommendations for protection from waterproofing or roofing material manufacturer.

F. Prohibit traffic from landscaped areas.

1.10 SECURITY

A. Provide security and facilities to protect Work from unauthorized entry, vandalism or theft.

B. Coordinate with Owner's security program.

1.11 PARKING

A. Provide temporary gravel surface parking areas to accommodate construction personnel.

B. When site space is not adequate, provide additional off-site parking.

C. Designate one parking space for the Owner and Engineer.

1.12 PROGRESS CLEANING AND WASTE REMOVAL

A. Maintain areas free of waste materials, debris, and rubbish. Maintain site in a clean and orderly condition.

B. Remove debris and rubbish from pipe chases, plenums, attics, crawl spaces and other closed or remote spaces prior to enclosing the space.

C. Broom and vacuum clean interior areas prior to start of surface finishing and continue cleaning to eliminate dust.

D. Collect and remove waste materials, debris and rubbish from site periodically and dispose off-site.

1.13 REMOVAL OF UTILITIES, FACILITIES, AND CONTROLS

A. Remove temporary utilities, equipment, facilities, and materials prior to Substantial Completion inspection.

B. Remove underground installations to a minimum depth of two (2) feet. Grade site as indicated.

C. Clean and repair damage caused by installation or use of temporary work.

D. Restore permanent facilities used during construction to specified condition.

PART 2 PRODUCTS

Not Used

PART 3 EXECUTION

Not Used

END OF SECTION

SECTION 01552

STORMWATER POLLUTION PREVENTION

PART 1 GENERAL

1.1 SECTION INCLUDES

The work to be performed under this section shall consist of furnishing all labor, equipment, and materials as required or necessary for stormwater pollution prevention as shown in the plans and specified herein.

1.2 RELATED SECTIONS

A. Section 01568 – Erosion and Sediment Control During Construction

B. Section 02270 – Seeding for Erosion Control.

1.3 STORMWATER POLLUTION PREVENTION

A. The Contractor shall be solely responsible for insuring that erosion of the site is kept to a minimum.

B. In areas of cut and fill as well as along ditch lines, the Contractor shall perform temporary grading as necessary to insure that water is not concentrated in one area in a manner which could cause significant erosion.

C. If necessary in the opinion of the Engineer, the Contractor will be required to install erosion and sediment control measures to prevent the loss of soil from the site and siltation of the pipes and channels downstream from the project due to construction. Refer to the SWPPP, the plans, Section 01568 – Erosion and Sediment Control During Construction, and Section 02270 – Seeding for Erosion Control.

D. In addition to the above-mentioned items, the Contractor shall also comply with any and all applicable federal, state, and local regulations relating to water quality and stormwater runoff including, but not limited to, the TCEQ TPDES stormwater regulations.

E. Any permits required for the construction site under the above referenced regulations shall be obtained by the Contractor. All responsibilities related thereto shall be placed upon the Contractor. All costs for erosion and sedimentation control (including fees) shall be included in the bid amount.

PART 2 PRODUCTS

PART 3 [Not Used]

PART 4 EXECUTION

[Not Used] END OF SECTION

SECTION 01568

EROSION AND SEDIMENT CONTROL DURING CONSTRUCTION

PART 1 GENERAL

1.1 SECTION INCLUDES

Furnish labor, materials, equipment, and incidentals necessary to provide erosion and sediment control for the duration of the construction period including furnishing, installing, and maintaining erosion and sediment control structures and procedures and the proper removal when no longer required.

The intent of this specification is to provide guidelines for the Contractor to adhere to all state, federal, and local environmental regulations. It is also the intent to provide preventive measures to keep sediment from entering any storm water system including open channels. It is the Contractor's responsibility to adhere to all federal, state, and local requirements. While the Engineer may require the Contractor to install erosion control devices during construction, this will in no way relieve the Contractor of his responsibility.

1.2 RELATED SECTIONS

A. Section 01300 – Submittals.

SUBMITTALS

Submittals shall be in accordance with Section 01300 – Submittals. Data describing all materials incorporated into the project is required for all of the various erosion and sediment control devices. Manufacturers' product data sheets shall be provided for manufactured products.

1.3 QUALITY ASSURANCE

A. Comply with applicable requirements of all governing authorities having jurisdiction. The specifications and the plans are not represented as being comprehensive, but rather convey the intent to provide complete slope protection and erosion control for both the Owner's and adjacent property.

B. Erosion control measures shall be established at the beginning of construction and maintained during the entire length of construction. On-site areas which are subject to severe erosion and off-site areas which are especially vulnerable to damage from erosion and/or sedimentation are to be identified and receive additional erosion control measures as directed by the Owner, Engineer, or Project Representative.

C. All land-disturbing activities shall be planned and conducted to minimize the size of the area to be exposed at any one time, to minimize the time of exposure, and to minimize off-site sedimentation damage.

D. Surface water runoff originating upgrade of exposed area shall be controlled to reduce erosion and sediment loss during the period of exposure.

E. When the increase in the peak rates and velocity of storm water runoff resulting from a land-disturbing activity is sufficient to cause accelerated erosion of the receiving ditch or stream, the Contractor shall install measures to control both the velocity and rate of release so as to minimize accelerated erosion and increased sedimentation of the stream as directed by the Owner, Engineer, or Project Representative.

F. The Contractor shall be responsible for periodically cleaning out and disposing of all sediment once the storage capacity of the drainage feature or structure receiving the sediment is reduced by one-half unless otherwise specified. The Contractor shall also be responsible for cleaning out and disposing of all sediment at the time of completion of the project.

G. Inspect all erosion and sediment control measures after each rainfall or daily during periods of prolonged rainfall. Inspection shall occur at least once a week during rainless periods. Correct any erosion and sediment control measures that do not conform to specifications and details.

1.4 JOB CONDITIONS

Comply with the local, state, and federal codes and ordinances. If the codes and ordinances require more stringent or additional erosion and sediment control measures during construction than those specified or shown on the plans, the Contractor shall provide such measures.

PART 2 PRODUCTS

2.1 SILT FENCE

Provide woven geotextile filter fabric made of either polypropylene, polyethylene, ethylene, or polyamide material. Geotextile fabric shall have a grab strength of 100 psi in any principle direction (ASTM D4632), Mullen burst strength exceeding 200 psi (ASTM D3786), and the equivalent opening size of between 20 and 50. Silt fence material shall contain ultraviolet ray inhibitors and stabilizers to provide a minimum of six months of expected usable construction life at a temperature range of 0° F to 120° F. Silt fence shall have galvanized welded wire mesh (12.5 gauge minimum, two inch by four inch maximum opening) as backing to provide support. Silt fence posts shall be1.00 – 1.33 lb/linear foot steel posts.

2.2 SANDBAGS

Sandbag material shall be polypropylene, polyethylene, polyamide, or cotton burlap woven fabric with a minimum unit weight of four ounces per square yard, a Mullen burst strength exceeding 300 psi, and ultraviolet stability exceeding 70 percent. Length shall be 24 to 30 inches. Width shall be 16 to 18 inches. Thickness shall be six to eight inches. Filled sandbags shall have an approximate weight of 90 to 125 pounds. Sandbags shall be filled with coarse grade sand that is free from deleterious material. All sand shall pass through a No. 10 sieve.

2.3 SOIL RETENTION BLANKET

Soil retention blankets shall consist of a geocomposite of excelsior or fiber blanket with an extruded plastic net. The plastic net shall be photodegradable and the excelsior or fiber blanket shall be made smolder resistant without the use of chemicals. Soil retention blankets shall be high velocity type to resist severe runoff. Soil retention blankets shall be American Excelsior Company Curlex Blanket or Engineer approved equal.

2.4 STABLIZED CONSTRUCTION EXIT

Aggregate used in stabilized construction exits shall be hard, durable, clean, open-graded, angular, and have a nominal diameter of four inches.

PART 3 EXECUTION

3.1 INSTALLATION

A. SILT FENCE

1. Provide silt fence systems at locations specified in accordance with the drawings and as necessary to prevent sediment from leaving the site. Silt fence shall be installed in such a manner that surface runoff will percolate through the system in sheet flow fashion and allow sediment to be retained and accumulated.

2. Silt fence should not be used where there is a concentration of water in a channel or drainage way or where soil conditions prevent a minimum toe-in depth of six inches or installation of support posts to a depth of 12 inches. If concentrated flow occurs after installation, corrective action must be taken such as placing a rock filter dam in the areas of concentrated flow.

3. Attach the fabric and wire backing to steel posts spaced no more than six feet apart and embedded at least 18 inches deep. Steel posts shall have projections for fastening wire and/or fabric.

4. Trench in the toe of the filter fabric fence with a spade or mechanical trencher so that the downstream face of the trench is vertical. The trench shall be a minimum of six inches wide and six inches deep. Lay filter fabric and wire along the bottom and downstream wall of the trench. Backfill and compact the trench.

5. The filter fabric and wire backing should be provided in continuous rolls and cut to the length of the silt fence to minimize the use of joints. When joints are necessary, the fabric and wire should only be spliced together at a support post and have at least six inches of overlap. The joint shall be securely sealed.

6. Unless otherwise directed, maintain the silt fence until the project is accepted by the Owner. Remove promptly in an appropriate manner when directed by the Owner.

7. Remove and dispose of sediment deposits off-site. Off-site disposal will be the responsibility of the Contractor. Sediment shall not be allowed to flush into streams or drainage ways. If sediment has been contaminated, it shall be disposed of in accordance with local, state, and federal regulations.

8. Inspection of silt fences shall occur after each rainfall or daily during periods of prolonged rainfall. Inspection shall occur at least once a week during dry periods. Repair or replace damaged sections immediately to bring the silt fence back into compliance with the plans and specifications. Sediment deposits shall be removed when they reach one-third of the height of the fence.

B. SANDBAG BERM

1. The purpose of a sandbag berm is to intercept sediment-laden water from disturbed areas such as construction in steam beds, create a detention pond, detain sediment, and release water in sheet flow.

2. A temporary sandbag berm shall be installed across a channel or right of way in a disturbed area and should be used when the contributing drainage area is greater than 5 acres. The berm shall be a minimum height of 18 inches measured from the top of the existing ground at the upslope toe to the top of the berm. The berm shall be sized to have a minimum width of 48 inches measured at the bottom of the berm and 18 inches measured at the top of the berm.

3. The sandbag berm shall be inspected after each rain or daily during periods of prolonged rainfall. The sandbags shall be reshaped or replaced as needed. Additional inspections shall be made weekly during dry periods. When the silt depth reaches six inches, the accumulated silt shall be removed and disposed of at an approved site in a manner that will not contribute to additional sedimentation. The sandbag berm shall be left in place until all upstream areas are stabilized and accumulated silt is removed.

C. SOIL RETENTION BLANKET

1. A soil retention blanket is a geotextile or biodegradable fabric placed over disturbed areas to limit the effects of erosion due to rainfall impact and runoff across barren soil. Soil retention blankets are manufactured by a wide variety of vendors addressing a wide variety of conditions such as vegetation establishment and high velocity flow. Blankets are used in areas which are difficult to stabilize such as steep slopes, drainage swales, or high pedestrian traffic areas.

2. The soil retention blanket, whether installed as slope protection or as flexible channel liner, shall be placed within 24 hours after seeding or sodding operations have been completed or as approved by the Engineer. Prior to placing the blanket, the area to be covered shall be relatively free of all rocks or clods over 1-1/2 inches in maximum dimension and all sticks or other foreign material which will prevent the close contact of the blanket with the soil. The area shall be smooth and free of ruts, and other depressions. If, as a result of rain, the prepared bed becomes crusted or eroded or if any eroded places, ruts, or depressions exist for any reason, the Contractor shall be required to rework the soil until it is smooth and to reseed or resod the area at the Contractor's expense.

3. Installation and anchorage of the soil retention blanket shall be in accordance with the manufacturer's recommendations.

D. STABILIZED CONSTRUCTION EXIT

1. The Contractor shall provide stabilized construction exits at the locations shown on the plans and as necessary to prevent vehicles leaving the site from tracking sediment off-site.

2. Stabilized construction exits shall be a minimum of 50 feet long, 14 feet wide, and eight inches thick. The Contractor shall enlarge stabilized construction exits at his own expense if necessary to prevent off-site tracking of sediment.

3. The Contractor shall periodically add rock as necessary for the stabilized construction exit to continue to function as intended.

4. The stabilized construction exit and the surrounding area shall be graded as necessary to route runoff from these areas to other erosion and sedimentation controls.

E. PROTECTION OF BARE AREAS

1. Apply seeding and soil retention blanket to bare areas including new embankment areas, fills, stripped areas, graded areas, or otherwise disturbed areas which have a grade greater than five percent or which will be exposed for more than 30 days. Seeding shall be in accordance with section 02936 – Seeding – Temporary Cool Weather Seeding.

2. Bare working areas on which it is not practical or desirable to install seeding and soil retention blankets, as determined by the Engineer, such as areas under proposed building slabs, shall be temporarily sloped to drain at a minimum of 0.2 percent and a maximum of five percent. These areas shall then be "trackwalked" with a crawler dozer traveling up and down the slope to form the effect of small "terraces" with the tracks of the dozer. Cover each area a minimum of three times.

3. Route runoff from the areas through the appropriate erosion and sediment control structures.

4. Protect earth spoil areas by "trackwalking" and silt fences.

5. When topsoil is called for as a component of another item, conduct erosion control practices described in this item during the topsoiling operation.

   a. When topsoiling, maintain erosion and sediment control structures such as swales, grade stabilization structures, berms, dikes, waterways, and sediment basins.

   b. Maintain grades that have been previously established on areas to be topsoiled.

   c. After the areas to be topsoiled have been brought to grade, and immediately prior to dumping and spreading the topsoil, the subgrade shall be loosened by disking or by scarifying to a depth of at least two inches to permit bonding of the topsoil to the subsoil. Compact soil by passing a bulldozer up and down the slope, tracking over the entire surface area of the slope to create small “terraces”.

6. Dust Control

   a. Control dust blowing and movement on construction sites and roads to prevent exposure of soil surfaces, to reduce on-site and off-site damage, to prevent health hazards, and to improve traffic safety.

   b. Control dust blowing by utilizing one or more of the following methods.

      1) Establishment of temporary vegetative cover.

      2) Tillage to roughen surface and bring clods to the surface.

      3) Irrigation by water sprinkling.

      4) Utilization of barriers such as solid board fences, snow fences, burlap fences, crate walls, bales of hay, or similar materials.

   c. Dust control methods shall be implemented immediately whenever dust is observed blowing over the project site.

F. LOCATION OF EROSION AND SEDIMENT CONTROL STRUCTURES

1. Locate erosion and sediment control structures as shown on the plans and as required to prevent erosion and removal of sediment

from the project site. Silt fences shall be required for disturbed areas and soil stockpiles/spoil areas. The runoff from no more than one acre of area shall be routed through any individual silt fence installation.

2. Install diversion dikes to divert runoff to other erosion and sediment control structures.

3. Install silt traps at the inlet (upstream) end of drainage structures, including open channels, through which runoff from disturbed areas or soil stockpiles/spoil areas may drain.

4. Provide an overall erosion and sediment control system which protects disturbed areas and soil stockpiles/spoil areas. The system shall be modified by the Contractor as needed to effectively control erosion and sediment during construction.

3.2 MAINTENANCE

A. Maintain erosion and sediment control structures and procedures in full working order at all times during construction. This shall include any necessary repair or replacement of items which have become damaged or ineffective. Remove sediment on a regular basis which accumulates in sediment control devices and place the material in approved earth spoil areas, return the material to the area from which it eroded, or dispose of it off-site.

B. The Contractor shall prohibit all equipment and vehicles from maneuvering in areas outside the dedicated rights-of-way and easements for construction. Damage caused by construction traffic to erosion and sedimentation control systems shall be repaired immediately at the expense of the Contractor.

C. Upon completion of construction and stabilization of disturbed areas, properly remove the temporary erosion and sediment control structures and complete the area as indicated.

D. Soil retention blankets will not require removal if installed on a finished graded area specified to receive seeding.

3.3 FIELD QUALITY CONTROL

In the event of conflict between these requirements and storm water pollution control laws, rules, or regulations of federal, state, or local agencies, the more restrictive requirements shall apply.

END OF SECTION

SECTION 01600

MATERIAL AND EQUIPMENT

PART 1 GENERAL

1.1 SECTION INCLUDES

A. Transportation and handling.

B. Storage and protection.

C. Product options.

1.2 RELATED SECTION

Section 01300 – Submittals.

1.3 DELIVERY, STORAGE AND HANDLING

A. Transport, handle, and store products in accordance with the manufacturers' instructions.

B. Promptly inspect shipments to ensure that products comply with requirements, quantities are correct, and that the products are undamaged.

C. Provide equipment and personnel to handle and store products by recommended methods to prevent soiling, disfigurement, or damage.

D. Store and protect products in accordance with the manufacturers' instructions.

E. Store products with seals and labels intact and legible.

F. Store sensitive products in weather-tight, climate-controlled enclosures in an environment favorable to the products.

G. For exterior storage of fabricated products, place on sloped supports above natural ground.

H. Provide off-site storage and protection when the site does not permit on-site storage or protection.

I. Cover products subject to deterioration with impervious sheet covering. Provide ventilation to prevent condensation and degradation of products.

J. Store loose granular materials on solid flat surfaces in a well-drained area. Prevent mixing with foreign matter.

K. Arrange storage of products to permit access for inspection. Periodically inspect to verify that the products are undamaged and are maintained in acceptable condition.

1.4 PRODUCT OPTIONS

A. Products Specified by Reference Standards or by Description Only.

Any products meeting those standards or descriptions are acceptable.

B. Products Specified by Naming One or More Manufacturers.

Products of manufacturers named and meeting specifications are acceptable. Request a substitution in accordance Section 01300 – Submittals for any manufacturer not named.

1.5 SUBSTITUTIONS

A. Engineer will consider requests for Substitutions only within thirty (30) days after date established in Notice to Proceed.

B. Substitutions may be considered when a Product becomes unavailable through no fault of the Contractor.

C. Document each request with complete data substantiating compliance of proposed Substitution with Contract Documents.

D. A request constitutes a representation that the Contractor:

1. Has investigated proposed Product and determined that it meets or exceeds the quality level of the specified Product.

2. Will provide the same warranty for the Substitution as for the specified Product.

3. Will coordinate installation and make changes to other Work which may be required for the Work to be complete with no additional cost to Owner.

4. Waives claims for additional costs or time extension which may subsequently become apparent.

5. Will reimburse Owner and Engineer for review or redesign services associated with re-approval by authorities.

E. Substitutions will not be considered when they are indicated or implied on shop drawing or product data submittals without separate written request or when acceptance will require revision to the Contract Documents.

F. Substitution Submittal Procedure:

1. Submit three (3) copies of request for Substitution for consideration. Limit each request to one proposed Substitution.

2. Submit shop drawings, product data, and certified test results attesting to the proposed Product equivalence. Burden of proof is on the Contractor.

3. The Engineer will notify Contractor in writing of decision to accept or reject request.

PART 2 PRODUCTS

[Not Used]

PART 3 EXECUTION

[Not Used]

END OF SECTION

SECTION 01700

CONTRACT CLOSEOUT

PART 1 GENERAL

1.1 SECTION INCLUDES

Requirements of the General Conditions and specified administrative procedures in closing out the construction contract.

1.2 RELATED SECTIONS

A. Section 01040 – Project Administration.

1.3 SUBMITTALS

Submit warranties, bonds, service agreements, affidavits, and releases at the completion of the project. Submit record documents in accordance with Section 01040 – Project Administration.

1.4 CLOSEOUT PROCEDURES

A. Submit written certification that Contract Documents have been reviewed, Work has been inspected, and that Work is complete in accordance with Contract Documents and ready for Engineer's review.

B. Provide submittals to Engineer that are required by governing or other authorities.

C. Submit final Application for Payment identifying total adjusted Contract Sum, previous payments, and sum remaining due.

1.5 FINAL CLEANING

A. Execute final cleaning prior to final project assessment.

B. Clean interior and exterior glass, surfaces exposed to view; remove temporary labels, stains and foreign substances, polish transparent and glossy surfaces, vacuum carpeted and soft surfaces.

C. Clean equipment and fixtures to a sanitary condition with cleaning materials appropriate to the surface and material being cleaned.

D. Clean filters of operating equipment.

E. Clean debris from roofs, gutters, downspouts, and drainage systems.

F. Clean site; sweep paved areas, rake clean landscaped surfaces.

G. Remove waste and surplus materials, rubbish, and construction facilities from the site.

1.6 ADJUSTING

A. Adjust operating Products and equipment to ensure smooth and unhindered operation.

1.7 PROJECT RECORD DOCUMENTS

A. Maintain on site one set of the following record documents; record actual revisions to the Work:

1. Drawings

2. Specifications

3. Addenda

4. Change Orders and other modifications to the Contract

5. Reviewed Shop Drawings, Product Data, and Samples

6. Manufacturer's instruction for assembly, installation, and adjusting

B. Ensure entries are complete and accurate, enabling future reference by Owner.

C. Store record documents separate from documents used for construction.

D. Record information concurrent with construction progress.

E. Specifications: Legibly mark and record at each Product section description of actual Products installed, including the following:

1. Manufacturer's name and product model and number.

2. Product substitutions or alternates utilized.

3. Changes made by Addenda and modifications.

F. Record Drawings and Shop Drawings: Legibly mark each item to record actual construction including:

1. Measured depths of foundations in relation to finish floor datum.

2. Measured horizontal and vertical locations of underground utilities and appurtenances, referenced to permanent surface improvements.

3. Measured locations of internal utilities and appurtenances concealed in construction, referenced to visible and accessible features of the Work.

4. Field changes of dimension and detail.

5. Details not on original Contract drawings.

G. Submit documents to Engineer prior to final Application for Payment.

1.8 OPERATION AND MAINTENANCE DATA

A. Submit data bound in 8½ x 11 inch text pages, three D side ring binders with durable plastic covers. Refer to Section 01730.

1.9 SPARE PARTS AND MAINTENANCE PRODUCTS

A. Provide spare parts, maintenance, and extra products in quantities specified in individual specification sections.

B. Deliver to Project site and place in location as directed; obtain receipt prior to final payment.

1.10 WARRANTIES

A. Provide duplicate notarized copies.

B. Execute and assemble transferable warranty documents from Subcontractors, suppliers and manufacturers.

C. Provide Table of Contents and assemble in three D side ring binder with durable plastic cover.

D. Submit prior to final Application for Payment.

E. For items of Work delayed beyond date of Substantial Completion, provide updated submittal within ten (10) days after acceptance, listing date of acceptance as start of warranty period.

1.11 MAINTENANCE SERVICE

A. Furnish service and maintenance of components indicated in specification sections for one (1) year from date of Substantial Completion during the warranty period.

B. Examine system components at a frequency consistent with reliable operation. Clean, adjust and lubricate as required.

C. Include systematic examination, adjustment and lubrication of components. Repair or replace parts whenever required. Use parts produced by the manufacturer of the original component.

D. Maintenance service shall not be assigned or transferred to any agent or Subcontractor without prior written consent of the Owner.

1.12 SUBSTANTIAL COMPLETION

A. Submit written notification to the Engineer that the work or designated portion of the work is substantially complete when the work is considered to be substantially complete per the General Conditions. Include a list of the items remaining to be completed or corrected before the project will be considered to be complete.

B. The Engineer shall visit the project site to observe the work within a reasonable time after notification is received to determine the status of completion.

C. The Engineer shall issue notification to the Contractor that the work is either substantially complete or that additional work must be performed before the project may be considered substantially complete.

1. The Engineer shall notify the Contractor in writing of items that must be completed before the project can be considered substantially complete.

a. Correct the noted deficiencies in the work.

b. Issue a second written notice with a revised list of deficiencies when work has been completed.

c. The Engineer shall revisit the site and the procedure shall begin again.

2. The Engineer shall issue a tentative Certificate of Substantial Completion to the Owner when the project is considered to be substantially complete. The certificate shall include a tentative list of items to be corrected before final payment.

a. The Owner will review and revise the list of items and notify the Engineer of any objections or other items that are to be included in the list.

b. The Engineer shall prepare and send to the Contractor a definite Certificate of Substantial Completion with a revised list of items to be corrected or completed.

c. Review the list and notify the Engineer in writing of any objections within 10 days of receipt of Certificate of Substantial Completion.

1.13 FINAL INSPECTION

A. Submit written certification when the project is complete and:

1. Contract documents have been reviewed.

2. Work has been completed in compliance with the Contract Documents.

3. Equipment and systems have been tested per Contract Documents and are fully operational.

4. Final operations and maintenance manuals have been provided to the Owner.

5. [Specified spare parts and special tools have been provided.

6. Work is ready for final inspection.

B. The Engineer shall make an inspection with the Owner and appropriate regulatory agencies to determine the status of completeness within a reasonable time after the receipt of the certification.

C. The Engineer shall issue notice that the project is complete or notify the Contractor that work is not complete or is defective.

1. Submit the request for final payment with closeout submittals described in paragraph 1.7 if notified that the project is complete and the work is acceptable.

2. Upon receipt of notification from the Engineer that work is incomplete or defective, take immediate steps to remedy the stated deficiencies. Send a second certification to the Engineer when work has been completed or corrected.

3. The Engineer shall re-visit the site and the procedure will begin again.

1.14 REINSPECTION FEES

A. Pay fees to the Owner to compensate the Engineer for reinspection of the work required by the failure of the work to comply with the claims of status of completion made by the Contractor.

B. Owner may withhold the amount of these fees from the Contractor's final payment.

C. Cost for additional inspections will be billed to the Owner by the Engineer for the actual hours required for the inspection and preparation of related reports in accordance with the following hourly rates.

Principal	$90.00
Professional Engineer	$85.00
Graduate Engineer	$65.00
Engineering Technician	$50.00
Administrative Assistant	$30.00

1.15 CLOSEOUT SUBMITTALS TO THE ENGINEER

A. Record drawings per Section 01040 - Project Administration.

B. Shop drawings/product data , operations and maintenance manuals, and other submittals as required by the Contract Documents.

C. Warranties, bonds, and service agreements.

D. Affidavit of all bills paid.

E. Evidence of final, continuing insurance and bond coverage as required by the Contract Documents.

F. Certificates of Occupancy, operating certificates, or other similar releases required to allow the Owner unrestricted use of the work and access to services and utilities.

G. Equipment installation reports on equipment.

H. Keys

1.16 FINAL PAYMENT REQUEST

A. Submit a preliminary final payment request. This request is to include adjustments to the contract amount for:

1. Approved Change Orders.

2. Deductions for defective work that has been accepted by the Owner.

3. Penalties and bonuses.

4. Deductions for liquidated damages.

5. Deductions for reinspection payments per paragraph 1.14.

6. Deduction for any unused portions of allowances.

7. Other adjustments.

B. The Engineer shall prepare a final Change Order reflecting the approved adjustments to the contract amount which have not been covered by previously approved Change Orders.

C. Submit the final payment request including the final Change Order per the General Conditions.

1.17 TRANSFER OF UTILITIES

A. Transfer utilities to the Owner when the Certificate of Substantial Completion has been issued, final cleaning has been completed per Section 01710 – Final Cleaning, and the work has been occupied by the Owner.

B. Submit final meter readings for utilities and similar data as of the date the Owner occupied the work.

1.18 WARRANTIES, BONDS, AND SERVICE AGREEMENTS

A. Provide warranties, bonds, and service agreements required by the Contract Documents.

B. The date for the start of warranties, bonds, and service agreements is established per the General Conditions.

C. Compile warranties, bonds, and service agreements and review these documents for compliance with the Contract Documents.

1. Each document is to be signed by the respective manufacturer, supplier, and subcontractor.

2. Each document is to include:

a. The product or work item description.

b. The firm, with the name of the principal, address, and telephone number.

c. Scope of the warranty, bond, or service agreement.

d. Date, duration, and expiration date for each warranty bond and service agreement.

e. Procedures to be followed in the event of a failure.

f. Specific instances that might invalidate the warranty or bond.

D. Submit two copies of each document to the Engineer for review and transmittal to the Owner.

E. Submit warranties, bonds, and service agreements:

1. At the time of final completion and before final payment.

2. Within 10 days after inspection and acceptance for equipment or components placed in service during the progress of construction.

1.19 CLAIMS AND DISPUTES

Claims and disputes must be resolved prior to recommendation of final payment. Final payment and acceptance by the Contractor will indicate that any outstanding claims or disputed issues have been resolved to the full satisfaction of the Contractor.

PART 2 PRODUCTS

Not Used

PART 3 EXECUTION

Not Used

END OF SECTION

SECTION 02220

TRENCH AND EXCAVATION SAFETY SYSTEM

PART 1 GENERAL

1.1 SECTION INCLUDES:

A. Requirements for. Trench and Excavation Safety System(s) to be designed and furnished by the Contractor for the safety and health of personnel.

1.2 REFERENCES:

A. 29CFR1926 - Occupational Safety and Health Standards - Excavations, United States Department of Labor, latest edition.

B. Others - Other applicable Federal, State, and local rules for Trench Construction or excavations.

1.3 REQUIREMENTS:

A. The Contractor shall develop, design, and implement a Trench and Excavation Safety System. The Contractor shall bear the sole responsibility for the adequacy of the System.

B. The requirements of 29CFR1926 shall be the minimum requirements for this specification and are adopted as a part of this specification. Other regulations relating to trench and excavation safety shall also be considered a part of this specification as if referenced directly.

C. Should the System require wider trenches than shown, the Contractor shall be responsible for the costs associated with determining adequacy of pipe bedding and class, as well as, purchase and installation of alternate and/or additional materials.

PART 2 PRODUCTS (Not Used)

PART 3 EXECUTION

3.1 GENERAL:

A. Implement the system in accordance with the written System Plan and conduct affected work in accordance with the same.

B. The system shall be in use during all phases of construction.

C. Neither the Engineer nor the Owner will be responsible for ensuring the trench safety system is constructed and utilized in accordance with the safety plan. This shall be the sole responsibility of the contractor.

PART 4 MEASUREMENT & PAYMENT

4.1 MEASUREMENT:

A. Trench safety shall be measured on a linear foot basis. No evaluation of the adequacy of the trench safety precautions will be made by the Engineer since the means, methods & responsibility for safety rest solely with the Contractor.

4.2 PAYMENT

A. Payment for trench safety will be subsidiary to other involved items. No direct pay. No evaluation of the adequacy of the trench safety systems used by the Contractor will be made by the Engineer since the means, methods and responsibility for trench safety rest solely with the Contractor. By approving the Contractor's request for payment of trench safety, the Engineer makes no representation that the Contractor's work for this pay item has been performed in a manner consistent with the Contract documents.

END OF SECTION

SECTION 02240

CARE OF WATER DURING CONSTRUCTION

PART 1 GENERAL

1.1 SECTION INCLUDES

A. Furnish labor, materials, equipment and incidentals, including pumps, piping and other facilities necessary to remove surface and groundwater as needed to perform the required project construction.

B. Build and maintain the necessary temporary impounding works, channels, and diversions. Remove the temporary works, equipment, and materials after they have served their purpose in strict accordance with this section of the specifications and the applicable drawings.

1.2 SUBMITTALS

A. Submittals shall be in accordance with Section 01300 – Submittals and shall include plans and procedures for handling flood flows and dewatering excavations. Submit plans and procedures to Engineer for approval.

B. Any construction modifications to the system shall also be submitted.

1.3 JOB CONDITIONS

Approval of plans and procedures for handling flood flows and dewatering does not relieve the Contractor of full responsibility and liability for care of water during construction.

PART 2 PRODUCTS

[Not Used]

PART 3 EXECUTION

3.1 FLOOD FLOWS AND OTHER WATER

The Contractor shall be responsible for handling and diverting any flood flows, stream flows, or any other water, including groundwater encountered during the progress of the work. Build, maintain, and operate cofferdams, channels, flumes, sumps, and other temporary works needed to pass floodwater, divert stream flow, or pass other surface water through or around the construction site and away from construction in progress. Unless otherwise approved by the Engineer, a diversion must discharge into the same natural watercourse in which its headworks are located. Construct permanent work in areas free from water. The removal of protective works, after having served their purpose, shall be in a manner satisfactory to the Engineer.

3.2 SURFACE RUNOFF

Surface runoff water shall be diverted away from the trenches. Such diversion shall be into existing drainage structures such as storm sewers, ditches or streams. Diversion of surface runoff shall be in such a manner to prevent flooding of or damage to public or private property.

3.3 DEWATERING EXCAVATED AREAS

A. The Contractor shall be responsible for dewatering all excavations during construction. Lower the water table as needed to keep those areas free of standing water or excessive muddy conditions.

B. Furnish the drains, sumps, casings, well points, and other equipment necessary to dewater areas for required construction work. Any dewatering method that causes a loss of fines from foundation areas will not be permitted. Keep available standby equipment to provide proper and continuous operation of the dewatering system. Provide continuous monitoring (24 hours per day) of the dewatering system to provide continuous operation.

3.4 DEWATERING TRENCHES

Dewatering of trenches shall be accomplished by whatever means elected by the contractor. However, bedding material or pipe may not be placed in wet or unstable trenches. Soil that cannot be properly dewatered shall be excavated and dry material tamped in place to such a depth as may be required to provide a firm trench bottom.

END OF SECTION

MODIFICATIONS TO
TxDOT STANDARD SPECIFICATIONS

MODIFICATIONS TO ITEM Tx100

PREPARING RIGHT OF WAY

This modification page modifies, amplifies, or amends the technical specifications and plans. In the event of discrepancy, this modification shall take precedence over the plans and the technical specifications.

Paragraph 100.1 Description

This item shall govern for the preparation of the work area for construction operations by the removal and disposal of trees, shrubs, and other items as identified in the Plans and as required for construction to begin. Preparing right of way includes the removal or trimming of all vegetation to achieve the minimum clear width and height above the proposed sidewalk per ADA requirements. Clear space requirements are generally as follows: minimum 80 inches clear height above accessible route.

Paragraph 100.2 Construction

Burning will not be permitted for the disposal of material.

Paragraph 100.3 Measurement

Preparing right of way shall be measured and paid for by the linear foot of sidewalk construction. All tree removal required for trees with a diameter less than 12” shall be subsidiary to the preparing right of way item – no separate pay.

ITEM 100
PREPARING RIGHT OF WAY

100.1. Description. Prepare the right of way and designated easements for construction operations by removing and disposing of all obstructions when removal of such obstructions is not specifically shown on the plans to be paid by other Items.

100.2. Construction. Protect designated features on the right of way and prune trees and shrubs as directed. Do not park equipment, service equipment, store materials, or disturb the root area under the branches of trees designated for preservation. When shown on the plans, treat cuts on trees with an approved tree wound dressing within 20 min. of making a pruning cut or otherwise causing damage to the tree. Follow all local and state regulations when burning. If burning of brush is approved, pile and burn at approved locations. When working in state or national forests or parks, coordinate work with state and federal authorities. Testing, removal, and disposal of hazardous materials will be in accordance with Article 6.10, "Hazardous Materials."

Clear areas shown on the plans of all obstructions, except those landscape features that are to be preserved. Such obstructions include but are not limited to remains of houses and other structures, foundations, floor slabs, concrete, brick, lumber, plaster, septic tank drain fields, basements, abandoned utility pipes or conduits, equipment, fences, retaining walls, and other items as specified on the plans. Remove vegetation and other landscape features not designated for preservation, curb and gutter, driveways, paved parking areas, miscellaneous stone, sidewalks, drainage structures, manholes, inlets, abandoned railroad tracks, scrap iron, and debris, whether above or below ground. Removal of live utility facilities is not included in this Item. Remove culverts, storm sewers, manholes, and inlets in proper sequence to maintain traffic and drainage.

In areas receiving embankment, remove obstructions not designated for preservation to 2 ft. below natural ground. In areas to be excavated, remove obstructions to 2 ft. below the excavation level. In all other areas, remove obstructions to 1 ft. below natural ground. When allowed by the plans or directed, cut trees and stumps off to ground level. Plug the remaining ends of abandoned underground structures over 3 in. in diameter with concrete to form a tight closure. Backfill, compact, and restore areas where obstructions have been removed, unless otherwise directed. Use approved material for backfilling. Dispose of wells in accordance with Item 103, "Disposal of Wells."

Accept ownership, unless otherwise directed, and dispose of removed materials and debris at locations off the right of way in accordance with local, state, and federal requirements.

100.3. Measurement. This Item will be measured by the acre; by the 100-foot station, regardless of the width of the right of way; or by each tree removed.

100.4. Payment. For "acre" and "station" measurement, the work performed in accordance with this Item and measured as provided under "Measurement" will be paid for at the unit price bid for "Preparing Right of Way." For "each" measurement, the work performed in accordance with this Item and measured as provided under "Measurement" will be paid for at the unit price bid for "Preparing Right of Way (Tree)" of the diameter specified. This price is full compensation for pruning of designated trees and shrubs; removal and disposal of structures and obstructions; backfilling of holes; furnishing and placing concrete for plugs; and equipment, labor, tools, and incidentals.

Total payment of this Item will not exceed 10% of the original contract amount until final acceptance or the initial release of retainage. The remainder will be paid on the estimate after the partial release of retainage.

MODIFICATIONS TO ITEM Tx104

REMOVING CONCRETE

This modification page modifies, amplifies, or amends the technical specifications and plans. In the event of discrepancy, this modification shall take precedence over the plans and the technical specifications.

Paragraph 100.1 Description

This item shall govern for the removal of existing concrete sidewalks, driveways, steps, and other concrete or concrete-type materials.

Paragraph 100.2 Construction

All concrete to remain adjacent to removed concrete shall be saw cut along neat lines.

Paragraph 100.3 Measurement

Removal of concrete sidewalks and concrete driveways shall be measured by the square yard. Removal of concrete sidewalks includes stairs, walls, and associated concrete structures adjacent to or adjoining concrete sidewalks.

ITEM 104

REMOVING CONCRETE

104.1. Description. Break, remove, and salvage or dispose of existing hydraulic cement concrete.

104.2. Construction. Remove existing hydraulic cement concrete from locations shown on the plans. Avoid damaging concrete that will remain in place. Saw-cut and remove the existing concrete to neat lines. Replace any concrete damaged by the Contractor at no expense to the Department. Unless otherwise shown on the plans, accept ownership and properly dispose of broken concrete in accordance with federal, state, and local regulations.

104.3. Measurement. Removing concrete pavement, floors, porches, patios, riprap, medians, foundations, sidewalks, driveways, and other appurtenances will be measured by the square yard (regardless of thickness) or by the cubic yard of calculated volume, in its original position.

Removing curb, curb and gutter, and concrete traffic barrier will be measured by the foot in its original position. The removal of monolithic concrete curb or dowelled concrete curb will be included in the concrete pavement measurement.

Removing retaining walls will be measured by the square yard along the front face from the top of the wall to the top of the footing.

This is a plans quantity measurement Item. The quantity to be paid is the quantity shown in the proposal, unless modified by Article 9.2, “Plans Quantity Measurement.” Additional measurements or calculations will be made if adjustments of quantities are required.

104.4. Payment. The work performed and materials furnished in accordance with this Item and measured as provided under “Measurement” will be paid for at the unit price bid for “Removing Concrete” of the type specified. This price is full compensation for breaking the concrete; loading, hauling and salvaging or disposing of the material; and equipment, labor, tools, and incidentals.

Removing retaining wall footings will not be paid for directly, but will be considered subsidiary to this Item.

MODIFICATIONS TO ITEM Tx105

REMOVING STABILIZED BASE AND ASPHALT PAVEMENT

This modification page modifies, amplifies, or amends the technical specifications and plans. In the event of discrepancy, this modification shall take precedence over the plans and the technical specifications.

Paragraph 100.1 Description

This item shall govern for the removal of existing asphalt and gravel driveways.

Paragraph 100.2 Construction

Asphalt driveways shall be saw cut along neat lines.

Paragraph 100.3 Measurement

Removal of stabilized base and asphalt pavement shall be subsidiary to the asphalt driveway repair item – no direct pay.

ITEM 105

REMOVING STABILIZED BASE AND ASPHALT PAVEMENT

105.1. Description. Break, remove, and store or dispose of existing asphalt pavement or stabilized base materials.

105.2. Construction. Break material retained by the Department into pieces not larger than 24 in. Remove existing asphalt pavement prior to disturbing stabilized base. Avoid contamination of the asphalt materials and damage to adjacent areas. Repair material damaged by operations outside the designated locations.

When shown on the plans and as directed, stockpile materials designated salvageable at designated sites. Prepare stockpile site by removing vegetation and trash and by providing for proper drainage. Dispose of materials not designated as salvageable in accordance with federal, state, and local regulations.

105.3. Measurement. This Item will be measured by the 100-ft. station along the baseline of each roadbed, by the square yard of existing stabilized base and asphalt pavement in its original position, or by the cubic yard of existing stabilized base and asphalt pavement in its original position, as calculated by the average end area method. Square yard and cubic yard measurement will be established by the widths and depths shown in the plans and the lengths measured in the field.

105.4. Payment. The work performed in accordance with this Item and measured as provided under "Measurement" will be paid for at the unit price bid for "Removing Stabilized Base and Asphalt Pavement," of the depth specified. This price is full compensation for breaking the material, loading, hauling, unloading, stockpiling or disposing; repair to areas outside designated locations for removal; and equipment, labor, tools, and incidentals.

MODIFICATIONS TO ITEM Tx110

EXCAVATION

This modification page modifies, amplifies, or amends the technical specifications and plans. In the event of discrepancy, this modification shall take precedence over the plans and the technical specifications.

Paragraph 110.1. Description

This item includes all excavation required to complete the proposed work as shown in the plans. All excavation required to complete the proposed work shall be considered "unclassified excavation" which shall consist of the excavation and disposal of all material, regardless of its nature.

Paragraph 110.2. Construction

Material removed that is suitable for use as embankment where shown on the Plans shall be stockpiled separately from material excavated that is not suitable for use as embankment in accordance with this Item and Item 132 for Embankment.

Paragraph 110.3. Measurement

Excavation required to complete the work as shown in the plans shall not be measured directly.

Paragraph 110.4. Payment

Excavation required to complete the work as shown in the plans shall not be paid for directly and shall be subsidiary to the sidewalk pay item – no direct pay.

ITEM 110
EXCAVATION

110.1. Description. Excavate areas as shown on the plans or as directed. Remove materials encountered to the lines, grades, and typical sections shown on the plans and cross-sections.

110.2. Construction. Accept ownership of unsuitable or excess material and dispose of material in accordance with local, state, and federal regulations at locations outside the right of way.

Maintain drainage in the excavated area to avoid damage to the roadway section. Correct any damage to the subgrade caused by weather, at no additional cost to the Department.

Shape slopes to avoid loosening material below or outside the proposed grades. Remove and dispose of slides as directed.

A. Rock Cuts. Excavate to finish subgrade. Manipulate and compact subgrade in accordance with Article 132.3.D, "Compaction Methods," unless excavation is to clean homogenous rock at finish subgrade elevation. If excavation extends below finish subgrade, use approved embankment material compacted in accordance with Article 132.3.D to replace undercut material at no additional cost.

B. Earth Cuts. Excavate to finish subgrade. In areas where base or pavement structure will be placed on subgrade, scarify subgrade to a uniform depth at least 6 in. below finish subgrade elevation. Manipulate and compact subgrade in accordance with Article 132.3.D, "Compaction Methods."

If unsuitable material is encountered below subgrade elevations, take corrective measures as directed. Drying required deeper than 6 in. below subgrade elevation will be paid for in accordance with Article 9.4, "Payment for Extra Work." Excavation and replacement of unsuitable material below subgrade elevations will be performed and paid for in accordance with the applicable bid items. However, if Item 132, "Embankment," is not included in the Contract, payment for replacement of unsuitable material will be paid for in accordance with Article 9.4.

C. Subgrade Tolerances. For turnkey construction, excavate to within 1/2 in. in cross-section and 1/2 in. in 16 ft. measured longitudinally. For staged construction, excavate to within 0.1 ft. in cross-section and 0.1 ft. in 16 ft. measured longitudinally.

110.3. Measurement. This Item will be measured by the cubic yard in its original position as computed by the method of average end areas.

This is a plans quantity measurement Item. The quantity to be paid is the quantity shown in the proposal unless modified by Article 9.2, "Plans Quantity Measurement." Additional measurements or calculations will be made if adjustments of quantities are required.

Limits of measurement for excavation in retaining wall areas will be as shown on the plans.

Shrinkage or swelling factors will not be considered in determining the calculated quantities.

110.4. Payment. The work performed and materials furnished in accordance with this Item and measured as provided under "Measurement" will be paid for at the unit price bid for "Excavation (Roadway)," "Excavation (Channel)," "Excavation (Special)," or "Excavation (Roadway and Channel)." This price is full compensation for authorized excavation; drying; undercutting subgrade and reworking or replacing the undercut material in rock cuts; hauling; disposal of material not used elsewhere on the project; scarification and compaction; and equipment, labor, materials, tools, and incidentals.

When a slide not due to the Contractor's negligence or operation occurs, payments for removal and disposal of the slide material will be in accordance with Article 9.4, "Payment for Extra Work."

Excavation in backfill areas of retaining walls will not be measured or paid for directly but will be subsidiary to pertinent Items.

MODIFICATIONS TO ITEM Tx132

EMBANKMENT

This modification page modifies, amplifies, or amends the technical specifications and plans. In the event of discrepancy, this modification shall take precedence over the plans and the technical specifications.

Paragraph 132.1. Materials

All embankment required to complete the proposed work shall be Type A or D or as approved by the Engineer.

Paragraph 132.3. Construction

All embankment required to complete the proposed work shall be constructed with Ordinary Compaction.

Paragraph 132.4. Measurement

Embankment required to complete the work as shown in the plans shall not be measured directly.

Paragraph 132.5. Payment

Embankment required to complete the work as shown in the plans shall not be paid for directly and shall be subsidiary to the sidewalk pay item – no direct pay.

ITEM 132
EMBANKMENT

132.1. Description. Furnish, place, and compact materials for construction of roadways, embankments, levees, dikes, or any designated section of the roadway where additional material is required.

132.2. Materials. Furnish approved material capable of forming a stable embankment from required excavation in the areas shown on the plans or from sources outside the right of way. Provide 1 or more of the following types as shown on the plans:

- **Type A.** Granular material that is free from vegetation or other objectionable material and meets the requirements of Table 1.

Table 1
Testing Requirements

Property	Test Method	Specification Limit
Liquid limit	Tex-104-E	≤ 45
Plasticity index (PI)	Tex-106-E	≤ 15
Bar linear shrinkage	Tex-107-E	≥ 2

The Linear Shrinkage test only needs to be performed as indicated in Tex-104-E.

- **Type B.** Materials such as rock, loam, clay, or other approved materials.
- **Type C.** Material meeting the specification requirements shown on the plans.
- **Type D.** Material from required excavation areas shown on the plans.

Retaining wall backfill material must meet the requirements of the pertinent retaining wall Items.

132.3. Construction. Meet the requirements of Item 7, "Legal Relations and Responsibilities to the Public," when off right of way sources are used. To allow for required testing, notify the Engineer before opening a material source. Complete preparation of the right of way, in accordance with Item 100, "Preparing Right of Way," for areas to receive embankment.

Backfill tree-stump holes or other minor excavations with approved material and tamp. Restore the ground surface, including any material disked loose or washed out, to its original slope. Compact the ground surface by sprinkling in accordance with Item 204, "Sprinkling," and by rolling using equipment complying with Item 210, "Rolling," when directed.

Scarify and loosen the unpaved surface areas, except rock, to a depth of at least 6 in., unless otherwise shown on the plans. Bench slopes before placing material. Begin placement of material at the toe of slopes. Do not place trees, stumps, roots, vegetation, or other objectionable material in the embankment. Simultaneously recompact scarified material with the placed embankment material. Do not exceed the layer depth specified in Section 132.3.D, "Compaction Methods."

Construct embankments to the grade and sections shown on the plans. Construct the embankment in layers approximately parallel to the finished grade for the full width of the individual roadway cross sections, unless otherwise shown on the plans. Ensure that each section of the embankment conforms to the detailed sections or slopes. Maintain the finished section, density, and grade until the project is accepted.

A. Earth Embankments. Earth embankment is mainly composed of material other than rock. Construct embankments in successive layers, evenly distributing materials in lengths suited for sprinkling and rolling.

Obtain approval to incorporate rock and broken concrete produced by the construction project in the lower layers of the embankment. When the size of approved rock or broken concrete exceeds the layer thickness requirements in Section 132.3.D, "Compaction Methods," place the rock and concrete outside the limits of the completed roadbed. Cut and remove all exposed reinforcing steel from the broken concrete.

Move the material dumped in piles or windrows by blading or by similar methods and incorporate it into uniform layers. Featheredge or mix abutting layers of dissimilar material for at least 100 ft. to ensure there are no abrupt changes in the material. Break down clods or lumps of material and mix embankment until a uniform material is attained.

Apply water free of industrial wastes and other objectionable matter to achieve the uniform moisture content specified for compaction.

When ordinary compaction is specified, roll and sprinkle each embankment layer in accordance with Section 132.3.D.1, "Ordinary Compaction." When density control is specified, compact the layer to the required density in accordance with Section 132.3.D.2, "Density Control."

B. Rock Embankments. Rock embankment is mainly composed of rock. Construct rock embankments in successive layers for the full width of the roadway cross-section with a depth of 18 in. or less. Increase the layer depth for large rock sizes as approved. Do not exceed a depth of 2-1/2 ft. in any case. Fill voids created by the large stone matrix with smaller stones during the placement and filling operations.

Ensure the depth of the embankment layer is greater than the maximum dimension of any rock. Do not place rock greater than 2 ft. in its maximum dimension, unless otherwise approved. Construct the final layer with graded material so that the density and uniformity is in accordance with Section 132.3.D, "Compaction Methods." Break up exposed oversized material as approved.

When ordinary compaction is specified, roll and sprinkle each embankment layer in accordance with Section 132.3.D.1, "Ordinary Compaction." When density control is specified, compact each layer to the required density in accordance with Section 132.3.D.2, "Density Control." When directed, proof-roll each rock layer where density testing is not possible, in accordance with Item 216, "Proof Rolling," to ensure proper compaction.

C. Embankments Adjacent to Culverts and Bridges. Compact embankments adjacent to culverts and bridges in accordance with Item 400, "Excavation and Backfill for Structures."

D. Compaction Methods. Begin rolling longitudinally at the sides and proceed toward the center, overlapping on successive trips by at least 1/2 the width of the roller. On super elevated curves, begin rolling at the lower side and progress toward the high side. Alternate roller trips to attain slightly different lengths. Compact embankments in accordance with one of the following methods as shown on the plans:

1. **Ordinary Compaction.** Use approved rolling equipment complying with Item 210, "Rolling," to compact each layer. The plans or the Engineer may require specific equipment. Do not allow the loose depth of any layer to exceed 8 in., unless otherwise approved. Before and during rolling operations, bring each layer to the moisture content directed. Compact each layer until there is no evidence of further consolidation. Maintain a level layer to ensure uniform compaction. If the required stability or finish is lost for any reason, recompact and refinish the subgrade at no additional expense to the Department.

2. **Density Control.** Compact each layer to the required density using equipment complying with Item 210, "Rolling." Determine the maximum lift thickness based on the ability of the compacting operation and equipment to meet the required density. Do not exceed layer thickness of 16 in. loose or 12 in. compacted material, unless otherwise approved. Maintain a level layer to ensure uniform compaction.

The Engineer will use Tex-114-E to determine the maximum dry density (D_a) and optimum moisture content (W_{opt}). Meet the requirements for field density and moisture content in Table 2, unless otherwise shown on the plans.

Table 2
Field Density Control Requirements

Description	Density[1]	Moisture Content[1]
	Tex-115-E	
PI ≤ 15	≥ 98% D_a	
15 < PI ≤ 35	≥ 98% D_a and ≤ 102% D_a	≥ $W_{opt.}$
PI > 35	≥ 95% D_a and ≤ 100% D_a	≥ $W_{opt.}$

Each layer is subject to testing by the Engineer for density and moisture content. During compaction, the moisture content of the soil should not exceed the value shown on the moisture-density curve, above optimum, required to achieve

- 98% dry density for soils with a PI greater than 15 but less than or equal to 35 or
- 95% dry density for soils with PI greater than 35.

When required, remove small areas of the layer to allow for density tests. Replace the removed material and recompact at no additional expense to the Department. Proof-roll in accordance with Item 216, "Proof Rolling," when shown on the plans or as directed. Correct soft spots as directed.

E. Maintenance of Moisture and Reworking. Maintain the density and moisture content once all requirements in Table 2 are met. For soils with a PI greater than 15, maintain the moisture content no lower than 4 percentage points below optimum. Rework the material to obtain the specified compaction when the material loses the required stability, density, moisture, or finish. Alter the compaction methods and procedures on subsequent work to obtain specified density as directed.

F. Acceptance Criteria.

1. **Grade Tolerances.**
   a. **Staged Construction.** Grade to within 0.1 ft. in the cross-section and 0.1 ft. in 16 ft. measured longitudinally.
   b. **Turnkey Construction.** Grade to within 1/2 in. in the cross-section and 1/2 in. in 16 ft. measured longitudinally.
2. **Gradation Tolerances.** When gradation requirements are shown on the plans, material is acceptable when not more than 1 of the 5 most recent gradation tests is outside the specified limits on any individual sieve by more than 5 percentage points.
3. **Density Tolerances.** Compaction work is acceptable when not more than 1 of the 5 most recent density tests is outside the specified density limits, and no test is outside the limits by more than 3 lb. per cubic foot.
4. **Plasticity Tolerances.** Material is acceptable when not more than 1 of the 5 most recent PI tests is outside the specified limit by no more than 2 points.

132.4. Measurement. Embankment will be measured by the cubic yard. Measurement will be further defined for payment as follows:

A. Final. The cubic yard will be measured in its final position using the average end area method. The volume is computed between the original ground surface or the surface upon which the embankment is to be constructed and the lines, grades, and slopes of the embankment. In areas of salvaged topsoil,

payment for embankment will be made in accordance with Item 160, “Topsoil.” Shrinkage or swell factors will not be considered in determining the calculated quantities.

B. Original. The cubic yard will be measured in its original and natural position using the average end area method.

C. Vehicle. The cubic yard will be measured in vehicles at the point of delivery.

When measured by the cubic yard in its final position, this is a plans quantity measurement Item. The quantity to be paid is the quantity shown in the proposal, unless modified by Article 9.2, “Plans Quantity Measurement.” Additional measurements or calculations will be made if adjustments of quantities are required.

Shrinkage or swell factors are the Contractor’s responsibility. When shown on the plans, factors are for informational purposes only.

Measurement of retaining wall backfill in embankment areas is paid for as embankment, unless otherwise shown on plans. Limits of measurement for embankment in retaining wall areas are shown on the plans.

132.5. Payment. The work performed and materials furnished in accordance with this Item and measured as provided under “Measurement” will be paid for at the unit price bid for “Embankment (Final),” “Embankment (Original),” or “Embankment (Vehicle),” of the compaction method and type specified. This price is full compensation for furnishing embankment; hauling; placing, compacting, finishing, and reworking; disposal of waste material; and equipment, labor, tools, and incidentals.

When proof rolling is directed, it will be paid for in accordance with Item 216, “Proof Rolling.”

All sprinkling and rolling, except proof rolling, will not be paid for directly, but will be considered subsidiary to this Item, unless otherwise shown on the plans.

Where subgrade is constructed under this contract, correction of soft spots in the subgrade will be at the Contractor’s expense. Where subgrade is not constructed under this contract, correction of soft spots in the subgrade will be paid in accordance with Article 9.4, “Payment for Extra Work.”

MODIFICATIONS TO ITEM Tx162

SODDING FOR EROSION CONTROL

This modification page modifies, amplifies, or amends the technical specifications and plans. In the event of discrepancy, this modification shall take precedence over the plans and the technical specifications.

Paragraph 100.1 Description

This item shall govern for the placement of block sod as outlined in the Plans and Plan General Notes. Fertilizer and watering required to establish sod shall be subsidiary to this item. Watering shall be needed to supplement natural rainfall to keep the sod moist until grass establishment. The Contractor shall be responsible for adjusting watering rates as directed or approved by the Engineer to take into account actual field and weather conditions.

Paragraph 100.2 Construction

All sod shall be Bermuda block sod unless noted otherwise in the Plans or required by the Owner. All disturbed areas must be sodded.

Paragraph 100.3 Measurement

Block sod will be measured and paid for by the square yard of established sod. Fertilizer and watering required to establish block sod shall be subsidiary to this item. The quantities shown for block sod on the Proposal are theoretical calculations based on the expected soil disturbance from the construction of the proposed grade to the existing topography using typical tie-in slopes per the Plans. In general, this accounts for the area between the new sidewalk and the existing edge of curb or pavement for the entire length of new sidewalk. This Item shall be a plan quantity payment only. No adjustments to these quantities will be made unless otherwise approved by the Engineer.

ITEM 162

SODDING FOR EROSION CONTROL

162.1. Description. Provide and install grass sod as shown on the plans or as directed.

162.2. Materials. Use live, growing grass sod of the type specified on the plans. Use grass sod with a healthy root system and dense matted roots throughout the soil of the sod for a minimum thickness of 1 in. Do not use sod from areas where the grass is thinned out. Keep sod material moist from the time it is dug until it is planted. Grass sod with dried roots is unacceptable.

A. Block Sod. Use block sod free from noxious weeds, Johnson grass, other grasses, or any matter deleterious to the growth and subsistence of the sod.

B. Mulch Sod. Use mulch sod from an approved source, free from noxious weeds, Johnson grass, other grasses, or any matter deleterious to the growth and subsistence of the sod.

C. Fertilizer. Furnish fertilizer in accordance with Article 166.2, "Materials."

D. Water. Furnish water in accordance with Article 168.2, "Materials."

E. Mulch. Use straw mulch consisting of oat, wheat or rice straw or hay mulch of either Bermudagrass or prairie grasses. Use straw or hay mulch free of Johnson grass and other noxious and foreign materials. Keep the mulch dry and do not use molded or rotted material.

F. Tacking Methods. Use a tacking agent applied in accordance with the manufacturer's recommendations or a crimping method on all straw or hay mulch operations. Tacking agents must be approved before use, or may be specified on the plans.

162.3. Construction. Cultivate the area to a depth of 4 in. before placing the sod. Plant the sod specified and mulch, if required, after the area has been completed to lines and grades as shown on the plans. Apply fertilizer uniformly over the entire area in accordance with Article 166.3, "Construction," and water in accordance with Article 168.3, "Construction." Plant between the average date of the last freeze in the spring and 6 weeks prior to the average date for the first freeze in the fall according to the Texas Almanac for the project area.

A. Sodding Types.

1. **Spot Sodding.** Use only Bermudagrass sod. Create furrows parallel to the roadway, approximately 5 in. deep and on 18-inch centers. Sod a continuous row not less than 3 in. wide in the 2 furrows adjacent to the roadway. Place 3-inch squares of sod on 15-inch centers in the remaining furrows. Place sod so that the root system will be completely covered by the soil. Firm all sides of the sod with the soil without covering the sod with soil.

2. **Block Sodding.** Place sod blocks over the prepared area. Roll or tamp the sodded area to form a thoroughly compacted, solid mat filling all voids in the sodded area with additional sod. Keep sod along edges of curbs, driveways, walkways, etc., trimmed until acceptance.

3. **Mulch Sodding.** Mow sod to no shorter than 4 in., and rake and remove cuttings. Disk the sod source in 2 directions, cutting the sod to a minimum of 4 in. Excavate the sod material to a depth of no more than 6 in. Keep excavated material moist or it will be rejected. Distribute the mulch sod uniformly over the area to a depth of 6 in. loose, unless otherwise shown on the plans, and roll with a light roller or other suitable equipment.

   Add or reshape the mulch sod to meet the requirements of Section 162.3.B, "Finishing."

B. Finishing. Smooth and shape the area after planting to conform to the desired cross sections. Spread any excess soil uniformly over adjacent areas or dispose of the excess soil as directed.

C. Straw or Hay Mulch. Apply straw or hay mulch for “Spot Sodding” and “Mulch Sodding” uniformly over the area as shown on the plans. Apply straw mulch at 2 to 2-1/2 tons per acre. Apply hay mulch at 1-1/2 to 2 tons per acre. Use a tacking method over the mulched area.

162.4. Measurement. “Spot Sodding,” “Block Sodding,” and “Straw or Hay Mulch” will be measured by the square yard in its final position. “Mulch Sodding” will be measured by the square yard in its final position or by the cubic yard in vehicles as delivered to the planting site.

162.5. Payment. The work performed and materials furnished in accordance with this Item and measured as provided under “Measurement” will be paid for at the unit price bid for “Spot Sodding,” “Block Sodding,” “Straw or Hay Mulch,” or “Mulch Sodding.” This price is full compensation for securing a source, excavation, loading, hauling, placing, rolling, finishing, furnishing materials, equipment, labor, tools, supplies, and incidentals. Fertilizer will not be paid for directly but will be subsidiary to this Item.

Unless otherwise specified on the plans, water, except for that used for maintaining and preparing the sod before planting, will be measured and paid for in accordance with Item 168, “Vegetative Watering.”

MODIFICATIONS TO ITEM Tx420

CONCRETE STRUCTURES

This modification page modifies, amplifies, or amends the technical specifications and plans. In the event of discrepancy, this modification shall take precedence over the plans and the technical specifications.

Paragraph 100.1 Description

This item shall govern for the installation of concrete structures including, but not limited to, pedestrian bridge abutments.

Paragraph 100.2 Construction

Bridge abutments shall be per the dimensions, type, and reinforcement as indicated in the Plans. All concrete for bridge abutment construction shall be Class C, 3,500 psi minimum.

Paragraph 100.3 Measurement

Bridge abutments shall be measured and paid for per each installed (two per bridge). All excavation, backfill, reinforcing material, labor, and equipment required for complete installation shall be subsidiary to the bridge abutment pay item and shall not be paid for separately.

ITEM 420
CONCRETE STRUCTURES

420.1. Description. Construct concrete structures.

420.2. Materials.

A. Concrete. Provide concrete conforming to Item 421, "Hydraulic Cement Concrete." For each type of structure or unit, provide the class of concrete shown on the plans or in pertinent governing specifications.

B. Grout or Mortar. Provide grout or mortar conforming to Section 421.2.F, "Mortar and Grout."

C. Latex. Provide an acrylic-polymer latex admixture (acrylic resin emulsion per DMS-4640, "Chemical Admixtures for Concrete") suitable for producing polymer-modified concrete or mortar. Do not allow latex to freeze.

D. Reinforcing Steel. Provide reinforcing steel conforming to Item 440, "Reinforcing Steel."

E. Expansion Joint Material. Provide materials that conform to the requirements of DMS-6310, "Joint Sealants and Fillers":

- Provide preformed fiber expansion joint material that conforms to the dimensions shown on the plans. Provide preformed bituminous fiber material unless otherwise specified.
- Provide a Class 4, 5, or 7 low-modulus silicone sealant unless otherwise directed.
- Provide asphalt board that conforms to dimensions shown on the plans.
- Provide re-bonded neoprene filler that conforms to the dimensions shown on the plans.

F. Waterstop. Provide rubber or polyvinyl chloride (PVC) waterstops that conform to DMS-6160, "Waterstops, Nylon Reinforced Neoprene Sheet, and Elastomeric Pads," unless otherwise shown on the plans.

G. Evaporation Retardants. Provide evaporation retardants that conform to the requirements of DMS-4650, "Hydraulic Cement Concrete Curing Materials and Evaporation Retardants."

H. Curing Materials. Provide membrane curing compounds that conform to the requirements of DMS-4650, "Hydraulic Cement Concrete Curing Materials and Evaporation Retardants."

Provide cotton mats that consist of a filling material of cotton "bat" or "bats" (at least 12 oz. per square yard) completely covered with unsized cloth (at least 6 oz. per square yard) stitched longitudinally with continuous parallel rows of stitching spaced at less than 4 in., or tuft both longitudinally and transversely at intervals less than 3 in. Provide cotton mats that are free from tears and in good general condition. Provide a flap at least 6 in. wide consisting of 2 thicknesses of the covering and extending along 1 side of the mat.

Provide polyethylene sheeting that is at least 4 mils thick and free from visible defects. Provide only clear or opaque white sheeting when the ambient temperature during curing exceeds 60°F or when applicable to control temperature during mass pours.

Provide burlap-polyethylene mats made from burlap impregnated on 1 side with a film of opaque white pigmented polyethylene, free from visible defects. Provide laminated mats that have at least 1 layer of an impervious material such as polyethylene, vinyl plastic, or other acceptable material (either as a solid sheet or impregnated into another fabric) and are free of visible defects.

I. Epoxy. Unless otherwise specified, provide epoxy materials that conform to DMS-6100, "Epoxy and Adhesives."

420.3. Equipment.

A. Fogging Equipment. Use fogging equipment that can apply water in a fine mist, not a spray. Produce the fog using equipment that pumps water or water and air under high pressure through a suitable atomizing nozzle. Use hand-held mechanical equipment portable enough to use in the direction of any prevailing wind and adaptable for intermittent use to prevent excessive wetting of the concrete.

B. Transporting and Placing Equipment. Use appropriate transporting and placing equipment such as buckets, chutes, buggies, belt conveyors, pumps, or other equipment as necessary. Do not transport or convey concrete through equipment made of aluminum. Use carts with pneumatic tires for carting or wheeling concrete over newly placed slabs.

Use tremies to control the fall of concrete or for underwater placement. Use tremies that are watertight and of large enough diameter to allow the placement of the concrete but less than 14 in. in diameter. For underwater placements, construct the tremie so that the bottom can be sealed and opened once the tremie has been fully charged with concrete.

Use pumps with lines at least 5 in. I.D. where Grade 2 or smaller coarse aggregate is used, and at least 8 in. I.D. for Grade 1 coarse aggregate.

C. Vibrators. Use immersion-type vibrators for consolidation of concrete. Provide at least 1 standby vibrator for emergency use.

D. Screeds and Work Bridges for Bridge Slabs. For bridge slabs use a self-propelled transverse screed or a mechanical longitudinal screed. Use transverse screeds that are able to follow the skew of the bridge for skews greater than 15° unless otherwise approved. Equip transverse screeds with a pan float. Manually operated screeding equipment may be used if approved for top slabs of culverts, small placements, or unusual conditions. Use screeds that are rigid and heavy enough to hold true to shape and have sufficient adjustments to provide for the required camber or section. Equip the screeds, except those of the roller drum type, with metal cutting edges.

For bridge slabs, use sufficient work bridges for finishing operations. Mount a carpet drag to a work bridge or a moveable support system that can vary the area of carpet in contact with the concrete. Use carpet pieces long enough to cover the entire width of the placement. Splice or overlap the carpet as necessary. Ensure that enough carpet is in contact longitudinally with the concrete being placed to provide the desired surface finish. Use artificial grass-type carpeting having a molded polyethylene pile face with a blade length between 5/8 and 1 in. and with a minimum weight of 70 oz. per square yard. Ensure that the carpet has a strong, durable backing not subject to rot and that the facing is adequately bonded to the backing to withstand the intended use. A burlap drag, attached to the pan float on a transverse screed, may be used instead of the carpet drag.

E. Temperature Recording Equipment. For mass concrete operations or as otherwise specified, use strip chart temperature recording devices, recording maturity meters in accordance with Tex-426-A, or other approved devices that are accurate to within ±2°F within the range of 32 to 212°F.

F. Artificial Heating Equipment. Use artificial heating equipment as necessary for maintaining the concrete temperatures as specified in Section 420.4.G.11, “Placing Concrete in Cold Weather.”

G. Sawing Equipment. Use sawing equipment capable of cutting grooves in completed bridge slabs and top slabs of direct-traffic culverts. Provide grooves that are 1/8 to 3/16 in. deep and nominally 1/8 in. wide. Groove spacing may range from 5/8 to 1 in. Use sawing equipment capable of cutting grooves in hardened concrete to within 18 in. of the barrier rail or curb.

H. Spraying Equipment. Use mechanically powered pressure sprayers, either air or airless, with appropriate atomizing nozzles for the application of membrane curing. Mechanically driven spraying equipment, adaptable to the rail system used by the screeds, may be used for applying membrane curing to bridge slabs. If approved, use hand-pressurized spray equipment equipped with 2 or 3 fan-spray nozzles. Ensure that the spray from each nozzle overlaps the spray from adjacent nozzles by approximately 50%.

I. Concrete Testing Equipment. Provide testing equipment for use by the Engineer in accordance with Section 421.3.C, "Testing Equipment."

420.4. Construction. Before starting work, obtain approval for proposed construction methods. Approval of construction methods and equipment does not relieve the Contractor's responsibility for safety or correctness of methods, adequacy of equipment, or completion of work in full accordance with the Contract.

Unless otherwise shown on the plans, it is the Contractor's option to perform testing on structural concrete (structural classes of concrete are identified in Table 5 of Section 421.4.A, "Classification and Mix Design") to determine the in-situ strength to address the schedule restrictions in Section 420.4.A, "Schedule Restrictions." The Engineer may require the Contractor to perform this testing for concrete placed in cold weather. For Contractor-performed testing, make enough test specimens to ensure that strength requirements are met for the operations listed in Section 420.4.A. Make at least 1 set of test specimens for each element cast each day. Cure these specimens under the same conditions as the portion of the structure involved for all stages of construction. Ensure safe handling, curing, and storage of all test specimens. Provide testing personnel, and sample and test the hardened concrete in accordance with Section 421.4.G, "Sampling and Testing of Concrete." The maturity method, Tex-426-A, may be used for in-situ strength determination for schedule restrictions if approved. Coring will not be allowed for in-situ strength determination for schedule restrictions. Provide the Engineer the opportunity to witness all testing operations. Report all test results to the Engineer.

If the Contractor does not wish to perform schedule restriction testing, the Engineer's 7-day lab-cured tests, performed in accordance with Section 421.4.G.5, "Adequacy and Acceptance of Concrete," will be used for schedule restriction determinations. The Engineer may require additional time for strength gain to account for field curing conditions such as cold weather.

A. Schedule Restrictions. Unless otherwise shown on the plans, construct and open completed structures to traffic with the following limitations:

1. **Setting Forms.** Attain at least 2,500 psi compressive strength before erecting forms on concrete footings supported by piling or drilled shafts, or on individual drilled shafts. Erect forms on spread footings and culvert footings after the footing concrete has aged at least 2 curing days as defined in Section 420.4.J, "Curing Concrete." Place concrete only after the forms and reinforcing steel have been inspected by the Engineer.

   Support tie beam or cap forms by falsework on previously placed tie beams only if the tie beam concrete has attained a compressive strength of 2,500 psi and the member is properly supported to eliminate stresses not provided for in the design. Maintain curing as required until completion of the curing period.

   Place superstructure forms or falsework on the substructure only if the substructure concrete has attained a compressive strength of 3,000 psi.

2. **Removal of Forms and Falsework.** Keep in place weight-supporting forms and falsework for bridge components and culvert slabs until the concrete has attained a compressive strength of 2,500 psi in accordance with Section 420.4.K, "Removal of Forms and Falsework." Keep all forms for mass placements defined in Section 420.4.G.14, "Mass Placements," in place for 4 days following concrete placement.

3. **Placement of Superstructure Members.** Do not place superstructure members before the substructure concrete has attained a compressive strength of 3,000 psi.

4. **Longitudinal Screeding of Bridge Slabs.** Place a longitudinal screed directly on previously placed concrete slabs to check and grade an adjacent slab only after the previously placed slab has aged at least 24 hr. Place and screed the concrete after the previously placed slabs have aged at least 48 hr. Maintain curing of the previously placed slabs during placement.

5. **Staged Placement of Bridge Slabs on Continuous Steel Units.** When staged placement of a slab is required, ensure that the previously placed concrete attains a compressive strength of 3,000 psi before placing the next stage placement. Multiple stages may be placed in a single day if approved.
6. **Storage of Materials on the Structure.** Obtain approval to store materials on completed portions of a structure once a compressive strength of 3,000 psi has been attained. Maintain proper curing if materials will be stored on structures before completion of curing.
7. **Placement of Equipment and Machinery.** Do not place erection equipment or machinery on the structure until the concrete has attained the design strength specified in Section 421.4.A, "Classification and Mix Design," unless otherwise approved.
8. **Carting of Concrete.** Once the concrete has attained a compressive strength of 3,000 psi, it may be carted, wheeled, or pumped over completed slabs. Maintain curing during these operations.
9. **Placing Bridge Rails.** Reinforcing steel and concrete for bridge rails may be placed on bridge slabs once the slab concrete has attained a compressive strength of 3,000 psi. If slipforming methods are used for railing concrete, ensure the slab concrete has attained its design strength specified in Section 421.4.A, "Classification and Mix Design," before placing railing concrete.
10. **Opening to Construction Traffic.** Bridges and direct-traffic culverts may be opened to all construction traffic when the design strength specified in Section 421.4.A, "Classification and Mix Design," has been attained if curing is maintained.
11. **Opening to Full Traffic.** Bridges and direct-traffic culverts may be opened to the traveling public when the design strength specified in Section 421.4.A, "Classification and Mix Design," has been attained for all structural elements including railing subject to impact from traffic, when curing has been completed for all slabs, and when the concrete surface treatment has been applied in accordance with Item 428, "Concrete Surface Treatment." Obtain approval before opening bridges and direct-traffic culverts to the traveling public. Other noncritical structural and nonstructural concrete may be opened for service upon the completion of curing unless otherwise specified or directed.
12. **Post-Tensioned Construction.** For structural elements designed to be post-tensioned ensure that strength requirements on the plans are met for stressing and staged loading of structural elements.
13. **Backfilling.** Backfill in accordance with Section 400.3.C, "Backfill."

B. Plans for Falsework and Forms. Submit 2 copies of plans for falsework and forms for piers, superstructure spans over 20 ft. long, bracing systems for girders when the overhang exceeds 3 ft. 6 in., and bridge widening details. Submit similar plans for other units of the structure as directed. Show all essential details of proposed forms, falsework, and bracing. Have a licensed professional engineer design, seal, and sign these plans. Department approval is not required, but the Department reserves the right to request modifications to the plans. The Contractor is responsible for the adequacy of these plans.

C. Falsework. Design and construct falsework to carry the maximum anticipated loads safely, including wind loads, and to provide the necessary rigidity. Submit details in accordance with Section 420.4.B, "Plans for Falsework and Forms."

Design job-fabricated falsework assuming a weight of 150 pcf for concrete, and include a liveload allowance of 50 psf of horizontal surface of the form. Do not exceed 125% of the allowable stresses used by the Department for the design of structures.

For commercially produced structural units used in falsework, do not exceed the manufacturer's maximum allowable working loads for moment and shear or end reaction. Include a liveload allowance of 35 psf of horizontal form surface in determining the maximum allowable working load for commercially produced structural units.

Provide timber that is sound, in good condition, and free from defects that would impair its strength. Provide timber that meets or exceeds the species, size, and grade requirements in the submitted falsework plans.

Provide wedges made of hardwood or metal in pairs to adjust falsework to desired elevations to ensure even bearing. Do not use wedges to compensate for incorrectly cut bearing surfaces.

Use sills or grillages that are large enough to support the superimposed load without settlement. Take precautions to prevent settling of the supporting material unless the sills or grillages are founded on solid rock, shale, or other hard materials.

Place falsework that cannot be founded on a satisfactory spread footing on piling or drilled shafts with enough bearing capacity to support the superimposed load without settlement. Drive falsework piling to the required resistance determined by the applicable formula in Item 404, "Driving Piling." Design drilled shafts for falsework to carry the superimposed load using both skin friction and point bearing.

Weld in conformance with Item 448, "Structural Field Welding." Securely brace each falsework bent to provide the stiffness required, and securely fasten the bracing to each pile or column it crosses.

Remove falsework when it is no longer required or as indicated on the submitted falsework plan. Pull or cut off foundations for falsework at least 2 ft. below finished ground level. Completely remove falsework, piling, or drilled shafts in a stream, lake, or bay to the approved limits to prevent obstruction to the waterway.

D. Forms. Submit formwork plans in accordance with Section 420.4.B, "Plans for Falsework and Forms."

1. General. Except where otherwise specified or permitted, provide forms of either timber or metal.

Design forms for the pressure exerted by a liquid weighing 150 pcf. Take the rate of concrete placement into consideration in determining the depth of the equivalent liquid. Include a liveload allowance of 50 psf of horizontal surface for job-fabricated forms. Do not exceed 125% of the allowable stresses used by the Department for the design of structures.

For commercially produced structural units used for forms, do not exceed the manufacturer's maximum allowable working loads for moment and shear or end reaction. Include a liveload allowance of 35 psf of horizontal form surface in determining the maximum allowable working load for commercially produced structural units.

Provide steel forms for round columns unless otherwise approved. Refer to Item 427, "Surface Finishes for Concrete," for additional requirements for off-the-form finishes.

Provide commercial form liners for imprinting a pattern or texture on the concrete surface as shown on the plans and specified in Section 427.4.B.2.d, "Form Liner Finish."

Provide forming systems that are practically mortar-tight, rigidly braced, and strong enough to prevent bulging between supports, and maintain them to the proper line and grade during concrete placement. Maintain forms in a manner that prevents warping and shrinkage. Do not allow offsets at form joints to exceed 1/16 in.

For forms to be left in place, use only material that is inert, nonbiodegradable, and nonabsorptive.

Attachment of forms or screed supports for bridge slabs to steel I-beams or girders may be by welding subject to the following requirements:

- Do not weld to tension flanges or to areas indicated on the plans.
- Weld in accordance with Item 448, "Structural Field Welding."

Take into account:

- deflections due to cast-in-place slab concrete and railing shown in the dead load deflection diagram in the setting of slab forms,

- differential beam or girder deflections due to skew angles and the use of certain stay-in-place slab forming systems, and
- deflection of the forming system due to the wet concrete.

For bridge approach slabs, securely stake forms to line and grade and maintain in position. Rigidly attach inside forms for curbs to the outside forms.

Construct all forms to permit their removal without marring or damaging the concrete. Clean all forms and footing areas of any extraneous matter before placing concrete. Provide openings in forms if needed for the removal of laitance or foreign matter

Treat the facing of all forms with bond-breaking coating of composition that will not discolor or injuriously affect the concrete surface. Take care to prevent coating of the reinforcing steel.

Complete all preparatory work before requesting permission to place concrete.

If the forms show signs of bulging or sagging at any stage of the placement, cease placement and remove the portion of the concrete causing this condition immediately if necessary. Reset the forms and securely brace them against further movement before continuing the placement.

2. **Timber Forms.** Provide properly seasoned good-quality lumber that is free from imperfections that would affect its strength or impair the finished surface of the concrete. Provide timber or lumber that meets or exceeds the requirements for species and grade in the submitted formwork plans.

   Maintain forms or form lumber that will be reused so that it stays clean and in good condition. Do not use any lumber that is split, warped, bulged, or marred or that has defects that will produce inferior work, and promptly remove such lumber from the work.

   Provide form lining for all formed surfaces except:
   - the inside of culvert barrels, inlets, manholes, and box girders;
   - the bottom of bridge slabs between beams or girders;
   - surfaces that are subsequently covered by backfill material or are completely enclosed; and
   - any surface formed by a single finished board or by plywood.

   Provide form lining of an approved type such as masonite or plywood. Do not provide thin membrane sheeting such as polyethylene sheets for form lining.

   Use plywood at least 3/4 in. thick. Place the grain of the face plies on plywood forms parallel to the span between the supporting studs or joists unless otherwise indicated on the submitted form drawings.

   Use plywood for forming surfaces that remain exposed that meets the requirements for B-B Plyform Class I or Class II Exterior of the U.S. Department of Commerce Voluntary Product Standard PS 1.

   Space studs and joists so that the facing form material remains in true alignment under the imposed loads.

   Space wales closely enough to hold forms securely to the designated lines, scabbed at least 4 ft. on each side of joints to provide continuity. Place a row of wales near the bottom of each placement.

   Place facing material with parallel and square joints, securely fastened to supporting studs.

   For surfaces exposed to view and receiving only an ordinary surface finish as defined in Section 420.4.M, “Ordinary Surface Finish,” place forms with the form panels symmetrical (long dimensions set in the same direction). Make horizontal joints continuous.

   Make molding for chamfer strips or other uses of materials of a grade that will not split when nailed and that can be maintained to a true line without warping. Dress wood molding on all

faces. Unless otherwise shown on the plans, fill forms at all sharp corners and edges with triangular chamfer strips measuring 3/4 in. on the sides.

To hold forms in place, use metal form ties of an approved type or a satisfactory substitute of a type that permits ease of removal of the metal. Cut back wire ties at least 1/2 in. from the face of the concrete.

Use devices to hold metal ties in place that are able to develop the strength of the tie and adjust to allow for proper alignment.

Entirely remove metal and wooden spreaders that separate the forms as the concrete is being placed.

Provide adequate clean-out openings for narrow walls and other locations where access to the bottom of the forms is not readily attainable.

3. **Metal Forms.** Requirements for timber forms regarding design, mortar-tightness, filleted corners, beveled projections, bracing, alignment, removal, reuse, and wetting also apply to metal forms except that metal forms do not require lining unless specifically noted on the plans.

   Use form metal thick enough to maintain the true shape without warping or bulging. Countersink all bolt and rivet heads on the facing sides. Design clamps, pins, or other connecting devices to hold the forms rigidly together and to allow removal without damage to the concrete. Use metal forms that present a smooth surface and that line up properly. Keep metal free from rust, grease, and other foreign materials.

4. **Form Supports for Overhang Slabs.** Form supports that transmit a horizontal force to a steel girder or beam or to a prestressed concrete beam are permitted provided a satisfactory structural analysis has been made of the effect on the girder or beam as indicated in the submitted formwork plans.

   When overhang brackets are used on prestressed concrete beam spans with slab overhangs not exceeding 3 ft 6 in., use beam bracing as indicated in the plans. For spans with overhangs exceeding this amount, use additional support for the outside beams regardless of the type of beam used. Submit details of the proposed bracing system in accordance with Section 420.4.B, "Plans for Falsework and Forms."

   Punch or drill holes full size in the webs of steel members for support of overhang brackets, or torch-cut them to 1/4 in. under size and ream them full size. Do not burn the holes full size. Leave the holes open unless otherwise shown on the plans. Never fill the holes by welding.

E. Drains. Install and construct weep holes and roadway drains as shown on the plans.

F. Placing Reinforcement. Place reinforcement as provided in Item 440, "Reinforcing Steel." Do not weld reinforcing steel supports to I-beams or girders or to reinforcing steel except where shown on the plans.

Place post-tensioning ducts in accordance with the approved prestressing details and in accordance with Item 426, "Prestressing." Keep ducts free of obstructions until all post-tensioning operations are complete.

G. Placing Concrete. Give the Engineer sufficient advance notice before placing concrete in any unit of the structure to permit the inspection of forms, reinforcing steel placement, and other preparations.

Follow the sequence of placing concrete shown on the plans or specified.

Do not place concrete when impending weather conditions would impair the quality of the finished work. If conditions of wind, humidity, and temperature are such that concrete cannot be placed without the potential for shrinkage cracking, place concrete in early morning or at night or adjust the placement schedule for more favorable weather. Consult the evaporation rate nomograph in the Portland Cement Association's *Design and Control of Concrete Mixtures* for shrinkage cracking

potential. When mixing, placing, and finishing concrete in non-daylight hours, adequately illuminate the entire placement site as approved.

If changes in weather conditions require protective measures after work starts, furnish adequate shelter to protect the concrete against damage from rainfall or from freezing temperatures as outlined in this Item. Continue operations during rainfall only if approved. Use protective coverings for the material stockpiles. Cover aggregate stockpiles only to the extent necessary to control the moisture conditions in the aggregates.

Allow at least 1 curing day after the concrete has achieved initial set before placing strain on projecting reinforcement to prevent damage to the concrete.

1. **Placing Temperature.** Place concrete according to the following temperature limits for the classes of concrete defined in Section 421.4.A, "Classification and Mix Design":
   - Place Class C, F, H, K, or SS concrete only when its temperature at time of placement is between 50 and 95°F. Increase the minimum placement temperature to 60°F if ground-granulated blast furnace (GGBF) slag is used in the concrete.
   - When used in a bridge slab or in the top slab of a direct-traffic culvert, place Class CO, DC, or S concrete only when its temperature at the time of placement is between 50 and 85°F. Increase the minimum placement temperature to 60°F if GGBF slag is used in the concrete. The maximum temperature increases to 95°F if these classes are used for other applications.
   - Place Class A, B, and D concrete only when its temperature at the time of placement is greater than 50°F.
   - Place mass concrete, defined by Section 420.4.G.14, "Mass Placements," only when its temperature at the time of placement is between 50 and 75°F.
2. **Transporting Time.** Place concrete delivered in agitating trucks within 60 min. after batching. Place concrete delivered in non-agitating equipment within 45 min. after batching. Revise the concrete mix design as necessary for hot weather or other conditions that contribute to quick setting of the concrete. Submit for approval a plan to demonstrate that these time limitations can be extended while ensuring the concrete can be properly placed, consolidated, and finished without the use of additional water.
3. **Workability of Concrete.** Place concrete with a slump as specified in Section 421.4.A.5, "Slump." Concrete that exceeds the maximum slump will be rejected. Water may be added to the concrete before discharging any concrete from the truck to adjust for low slump provided that the maximum mix design water–cement ratio is not exceeded. After introduction of any additional water or chemical admixtures, mix concrete in accordance with Section 421.4.E, "Mixing and Delivering Concrete." Do not add water or chemical admixtures after any concrete has been discharged.
4. **Transporting Concrete.** Use a method and equipment capable of maintaining the rate of placement shown on the plans or required by this Item to transport concrete to the forms. Transport concrete by buckets, chutes, buggies, belt conveyors, pumps, or other methods.

   Protect concrete transported by conveyors from sun and wind to prevent loss of slump and workability. Shade or wrap with wet burlap pipes through which concrete is pumped as necessary to prevent loss of slump and workability.

   Arrange and use chutes, troughs, conveyors, or pipes so that the concrete ingredients will not be separated. When necessary to prevent segregation, terminate such equipment in vertical downspouts. Extend open troughs and chutes, if necessary, down inside the forms or through holes left in the forms.

   Keep all transporting equipment clean and free from hardened concrete coatings. Discharge water used for cleaning clear of the concrete.

5. **Preparation of Surfaces.** Thoroughly wet all forms, prestressed concrete panels, T-beams, and concrete box beams on which concrete is to be placed before placing concrete on them. Remove any remaining puddles of excess water before placing concrete. Provide surfaces that are in a moist, saturated surface-dry condition when concrete is placed on them.

   Ensure that the subgrade or foundation is moist before placing concrete for bridge approach slabs or other concrete placed on grade. Lightly sprinkle the subgrade if dry.

6. **Expansion Joints.** Construct joints and devices to provide for expansion and contraction in accordance with plan details and the requirements of this Section and Item 454, "Bridge Expansion Joints."

   Prevent bridging of concrete or mortar around expansion joint material in bearings and expansion joints.

   Use forms adaptable to loosening or early removal in construction of all open joints and joints to be filled with expansion joint material. To avoid expansion or contraction damage to the adjacent concrete, loosen these forms as soon as possible after final concrete set to permit free movement of the span without requiring full form removal.

   When the plans show a Type A joint, provide preformed fiber joint material in the vertical joints of the roadway slab, curb, median, or sidewalk, and fill the top 1 in. with the specified joint sealing material unless noted otherwise. Install the sealer in accordance with Item 438, "Cleaning and Sealing Joints and Cracks (Rigid Pavement and Bridge Decks)," and the manufacturer's recommendations.

   Use light wire or nails to anchor any preformed fiber joint material to the concrete on 1 side of the joint.

   Ensure that finished joints conform to the plan details with the concrete sections completely separated by the specified opening or joint material.

   Remove all concrete within the joint opening soon after form removal and again where necessary after surface finishing to ensure full effectiveness of the expansion joint.

7. **Construction Joints.** A construction joint is the joint formed by placing plastic concrete in direct contact with concrete that has attained its initial set. Monolithic placement means that the manner and sequence of concrete placing does not create a construction joint.

   Make construction joints of the type and at the locations shown on the plans. Do not make joints in bridge slabs not shown on the plans unless approved. Additional joints in other members are not permitted without approval. Place authorized additional joints using details equivalent to those shown on the plans for joints in similar locations.

   Unless otherwise required, make construction joints square and normal to the forms. Use bulkheads in the forms for all vertical joints.

   Thoroughly roughen the top surface of a concrete placement terminating at a horizontal construction joint as soon as practical after initial set is attained.

   Thoroughly clean the hardened concrete surface of all loose material, laitance, dirt, and foreign matter, and saturate it with water. Remove all free water and moisten the surface before concrete or bonding grout is placed against it.

   Draw forms tight against the existing concrete to avoid mortar loss and offsets at joints.

   Coat the joint surface with bonding mortar, grout, epoxy, or other material as indicated in the plans or other Items. Provide Type V epoxy per DMS-6100, "Epoxies and Adhesives," for bonding fresh concrete to hardened concrete. Place the bonding epoxy on a clean, dry surface, and place the fresh concrete while the epoxy is still tacky. Place bonding mortar or grout on a

surface that is saturated surface-dry, and place the concrete before the bonding mortar or grout dries. Place other bonding agents in accordance with the manufacturer's recommendations.

8. **Handling and Placing.** Minimize segregation of the concrete and displacement of the reinforcement when handling and placing concrete. Produce a uniform dense compact mass.

   Do not allow concrete to free-fall more than 5 ft. except in the case of drilled shafts, thin walls such as in culverts, or as allowed by other Items. Remove any hardened concrete splatter ahead of the plastic concrete.

   Fill each part of the forms by depositing concrete as near its final position as possible. Do not deposit large quantities at 1 point and run or work the concrete along the forms.

   Deposit concrete in the forms in layers of suitable depth but not more than 36 in. deep unless otherwise permitted.

   Avoid cold joints in a monolithic placement. Sequence successive layers or adjacent portions of concrete so that they can be vibrated into a homogeneous mass with the previously placed concrete before it sets. When re-vibration of the concrete is shown on the plans, allow at most 1 hr. to elapse between adjacent or successive placements of concrete except as otherwise allowed by an approved placing procedure. This time limit may be extended by 1/2 hr. if the concrete contains at least a normal dosage of retarding admixture.

   Use an approved retarding agent to control stress cracks and cold joints in placements where differential settlement and setting time may induce cracking.

9. **Consolidation.** Carefully consolidate concrete and flush mortar to the form surfaces with immersion type vibrators. Do not use vibrators that operate by attachment to forms or reinforcement except where approved on steel forms.

   Vibrate the concrete immediately after deposit. Systematically space points of vibration to ensure complete consolidation and thorough working of the concrete around the reinforcement, embedded fixtures, and into the corners and angles of the forms. Insert the vibrator vertically where possible except for slabs where it may be inserted in a sloping or horizontal position. Vibrate the entire depth of each lift, allowing the vibrator to penetrate several inches into the preceding lift. Do not use the vibrator to move the concrete to other locations in the forms. Do not drag the vibrator through the concrete. Thoroughly consolidate concrete along construction joints by operating the vibrator along and close to but not against the joint surface. Continue the vibration until the concrete surrounding reinforcements and fixtures is completely consolidated. Hand-spade or rod the concrete if necessary to ensure flushing of mortar to the surface of all forms.

10. **Installation of Dowels and Anchor Bolts.** Install dowels and anchor bolts by casting them in-place or by grouting with grout, epoxy, or epoxy mortar unless noted otherwise. Form or drill holes for grouting.

    Drill holes for anchor bolts to accommodate the bolt embedment required by the plans. Make holes for dowels at least 12 in. deep unless otherwise shown on the plans. When using grout or epoxy mortar, make the diameter of the hole at least twice the dowel or bolt diameter, but the hole need not exceed the dowel or bolt diameter plus 1-1/2 in. When using epoxy, make the hole diameter 1/16 to 1/4 in. greater than the dowel or bolt diameter.

    Thoroughly clean holes of all loose material, oil, grease, or other bond-breaking substance, and blow them clean with filtered compressed air. Ensure that holes are in a surface dry condition when epoxy type material is used and in a surface moist condition when hydraulic cement grout is used. Develop and demonstrate for approval a procedure for cleaning and preparing the holes for installation of the dowels and anchor bolts. Completely fill the void between the hole and dowel

or bolt with grouting material. Follow exactly the requirements for cleaning outlined in the product specifications for prepackaged systems.

For cast-in-place or grouted systems, provide hydraulic cement grout in accordance with Section 421.2.F, “Mortar and Grout,” epoxy, epoxy mortar, or other prepackaged grouts as approved. Provide a Type III epoxy per DMS-6100, “Epoxies and Adhesives,” when neat epoxy is used for anchor bolts or dowels. Provide Type VIII epoxy per DMS-6100 when an epoxy grout is used. Provide grout, epoxy, or epoxy mortar as the binding agent unless otherwise indicated on the plans.

Provide other anchor systems as required in the plans.

11. **Placing Concrete in Cold Weather.** Protect concrete placed under weather conditions where weather may adversely affect results. Permission given by the Engineer for placing during cold weather does not relieve the Contractor of responsibility for producing concrete equal in quality to that placed under normal conditions. If concrete placed under poor conditions is unsatisfactory, remove and replace it as directed at Contractor’s expense.

    Do not place concrete in contact with any material coated with frost or having a temperature of 32°F or lower. Do not place concrete when the ambient temperature in the shade is below 40°F and falling unless approved. Concrete may be placed when the ambient temperature in the shade is 35°F and rising or above 40°F.

    Provide and install recording thermometers, maturity meters, or other suitable temperature measuring devices to verify that all concrete is effectively protected as follows:

    - Maintain the temperature of the top surface of bridge slabs and top slabs of direct-traffic culverts at 50°F or above for 72 hr. from the time of placement and above 40°F for an additional 72 hr.
    - Maintain the temperature at all surfaces of concrete in bents, piers, culvert walls, retaining walls, parapets, wingwalls, bottoms of bridge slab or culvert top slabs, and other similar formed concrete at 40°F or above for 72 hr. from the time of placement.
    - Maintain the temperature of all other concrete, including the bottom slabs (footings) of culverts, placed on or in the ground above 32°F for 72 hr. from the time of placement.

    Use additional covering, insulated forms, or other means and, if necessary, supplement the covering with artificial heating. Avoid applying heat directly to concrete surfaces. Cure as specified in Section 420.4.J, “Curing Concrete,” during this period until all requirements for curing have been satisfied.

    When impending weather conditions indicate the possible need for temperature protection, have on hand all necessary heating and covering material, ready for use, before permission is granted to begin placement.

12. **Placing Concrete in Hot Weather.** Use an approved retarding agent in all concrete for superstructures and top slabs of direct-traffic culverts, except concrete containing GGBF slag, when the temperature of the air is above 85°F unless otherwise directed.

    Keep the concrete at or below the maximum temperature at time of placement as specified in Section 420.4.G.1, “Placing Temperature.” Sprinkle and shade aggregate stockpiles or use ice, liquid nitrogen systems, or other approved methods as necessary to control the concrete temperature.

13. **Placing Concrete in Water.** Deposit concrete in water only when shown on the plans or with approval. Make forms or cofferdams tight enough to prevent any water current passing through the space in which the concrete is being deposited. Do not pump water during the concrete placing or until the concrete has set for at least 36 hr.

Place the concrete with a tremie or pump, or use another approved method, and do not allow it to fall freely through the water or disturb it after it is placed. Keep the concrete surface approximately level during placement.

Support the tremie or operate the pump so that it can be easily moved horizontally to cover all the work area and vertically to control the concrete flow. Submerge the lower end of the tremie or pump hose in the concrete at all times. Use continuous placing operations until the work is complete.

For concrete to be placed under water, design the concrete mix in accordance with Item 421, "Hydraulic Cement Concrete," with a minimum cement content of 650 lb. per cubic yard. Include an anti-washout admixture in the mix design as necessary to produce a satisfactory finished product.

14. **Mass Placements.** Mass placements are defined as placements with a least dimension greater than or equal to 5 ft., or designated on the plans. For monolithic mass placements, develop and obtain approval for a plan to ensure the following during the heat dissipation period:
    - the temperature differential between the central core of the placement and the exposed concrete surface does not exceed 35°F and
    - the temperature at the central core of the placement does not exceed 160°F.

    Base this plan on the equations given in the Portland Cement Association's *Design and Control of Concrete Mixtures*. Cease all mass placement operations and revise the plan as necessary if either of the above limitations is exceeded.

    Include a combination of the following elements in this plan:
    - selection of concrete ingredients including aggregates, gradation, and cement types, to minimize heat of hydration;
    - use of ice or other concrete cooling ingredients;
    - use of liquid nitrogen dosing systems;
    - controlling rate or time of concrete placement;
    - use of insulation or supplemental external heat to control heat loss;
    - use of supplementary cementing materials; or
    - use of a cooling system to control the core temperature.

    Furnish and install 2 sets of temperature recording devices, maturity meters, or other approved equivalent devices at designated locations. Use these devices to simultaneously measure the temperature of the concrete at the core and the surface. Maintain temperature control methods for 4 days unless otherwise approved. Maturity meters may not be used to predict strength of mass concrete.

15. **Placing Concrete in Foundation and Substructure.** Do not place concrete in footings until the depth and character of the foundation has been inspected and permission has been given to proceed.

    Placing of concrete footings upon seal concrete is permitted after the cofferdams are free from water and the seal concrete cleaned. Perform any necessary pumping or bailing during the concreting from a suitable sump located outside the forms.

    Construct or adjust all temporary wales or braces inside cofferdams as the work proceeds to prevent unauthorized construction joints.

    When footings can be placed in a dry excavation without the use of cofferdams, omit forms if approved, and fill the entire excavation with concrete to the elevation of the top of footing.

    Place concrete in columns monolithically between construction joints unless otherwise directed. Columns and caps or tie beams supported on them may be placed in the same operation or separately. If placed in the same operation, allow for settlement and shrinkage of the column

concrete by placing it to the lower level of the cap or tie beam, and delay placement between 1 and 2 hr. before proceeding with the cap or tie beam placement.

16. **Placing Concrete in Box Culverts.** Where the top slab and walls are placed monolithically in culverts more than 4 ft. in clear height, allow between 1 and 2 hr. to elapse before placing the top slab to allow for settlement and shrinkage in the wall concrete.

    Accurately finish the footing slab at the proper time to provide a smooth uniform surface. Finish top slabs that carry direct-traffic as specified in this Item. Give top slabs of fill type culverts a float finish.

17. **Placing Concrete in Superstructure.** Unless otherwise shown on the plans, place simple span bridge slabs without transverse construction joints by using either a self-propelled transverse finishing machine or a mechanical longitudinal screed. For small placements or for unusual conditions such as narrow widening, variable cross-slopes, or transitions, use of manually operated screeding equipment may be permitted. Support the screed adequately on a header or rail system stable enough to withstand the longitudinal or lateral thrust of the equipment. Adjust the profile grade line as necessary to account for variations in beam camber and other factors to obtain the required slab thickness and concrete cover over the slab reinforcement. Set beams and verify their surface elevations in a sufficient number of spans so that when adjustment is necessary, the profile grade line can be adjusted over suitable increments to produce a smooth riding surface. Take dead load deflection into account in setting the grades of headers and rail systems. Use construction joints, when required or permitted for slab placements on steel or prestressed concrete beams, as shown on the plans. Before placing concrete on steel girder or truss spans, release falsework under the spans and swing the spans free on their permanent supports.

    Make 1 or more passes with the screed over the bridge slab segment before placing concrete on it to ensure proper operation and maintenance of grades and clearances. Use an approved system of checking to detect any vertical movement of the forms or falsework. Maintain forms for the bottom surface of concrete slabs, girders, and overhangs to the required vertical alignment during concrete placing.

    Fog unformed surfaces of slab concrete in bridge slabs and in top slabs of direct-traffic culverts from the time of initial strikeoff of the concrete until finishing is completed and required interim curing is in place. Do not use fogging as a means to add finishing water, and do not work moisture from the fog spray into the fresh concrete.

    For simple spans, retard the concrete only if necessary to complete finishing operations or as required by this Section. When filling curb forms, bring the top of curb and sidewalk section to the correct camber and alignment, and finish them as described in this Item.

    a. **Transverse Screeding.** Install rails for transverse finishing machines that are supported from the beams or girders so that the supports may be removed without damage to the slab. Prevent bonding between removable supports and the concrete in an acceptable manner. Do not allow rail support parts that remain embedded in the slab to project above the upper mat of reinforcing steel. Rail or screed supports attached to I-beams or girders are subject to the requirements of this Item. Unless otherwise shown on the plans, for transverse screeding the minimum rate of concrete placement is 30 linear feet of bridge slab per hour. Deposit concrete parallel to the skew of the bridge so that all girders are loaded uniformly along their length. Deposit slab concrete between the exterior beam and the adjacent beam before placing concrete in the overhang portion of the slab. Furnish personnel and equipment capable of placing, finishing, and curing the slab at an acceptable rate to ensure compliance with the specifications. Place concrete in transverse strips. On profile grades greater than 1-1/2%, start placement at the lowest end.

b. **Longitudinal Screeding.** Unless otherwise shown on the plans, use of temporary intermediate headers will be permitted for placements over 50 ft. long if the rate of placement is rapid enough to prevent a cold joint and if these headers are designed for easy removal to permit satisfactory consolidation and finish of the concrete at their locations. Deposit slab concrete between the exterior beam and the adjacent beam before placing concrete in the overhang portion of the slab. Place concrete in longitudinal strips starting at a point in the center of the segment adjacent to 1 side except as this Section indicates, and complete the strip by placing uniformly in both directions toward the ends. For spans on a profile grade of 1-1/2% or more, start placing at the lowest end. Use strips wide enough that the concrete within each strip remains plastic until placement of the adjacent strip. Where monolithic curb construction is specified, place the concrete in proper sequence to be monolithic with the adjacent longitudinal strips of the slabs.

c. **Placements on Continuous Steel Units.** Unless otherwise shown on the plans, place slabs on continuous steel units in a single continuous operation without transverse construction joints using a self-propelled transverse finishing machine or a mechanical longitudinal screed. Retard the initial set of the concrete sufficiently to ensure that concrete remains plastic in at least 3 spans immediately preceding the slab being placed. Use construction joints, when required for slab placements on steel beams or girders, as shown on the plans. When staged placement of a slab is required in the plans, ensure that the previously placed concrete attains a compressive strength of 3,000 psi before placing the next stage concrete. Multiple stages may be placed in a single day if approved. Where plans permit staged placing without specifying a particular order of placement, use an approved placing sequence that will not overstress of any of the supporting members.

d. **Slab and Girder Units.** Unless otherwise shown on the plans, place girders, slab, and curbs of slab and girder spans monolithically. Fill concrete girder stems first, and place the slab concrete within the time limits specified in this Item. If using a transverse screed, place concrete in the stems for a short distance and then place the concrete in transverse strips. If using a longitudinal screed, fill the outside girder stem first, beginning at the low end or side, and continue placement in longitudinal strips.

H. **Treatment and Finishing of Horizontal Surfaces Other Than Bridge Slabs.** Strike off to grade and finish all unformed upper surfaces. Do not use mortar topping for surfaces constructed under this Section.

After the concrete has been struck off, float the surface with a suitable float. Give bridge sidewalks a wood float or broom finish, or stripe them with a brush.

Slightly slope the tops of caps and piers between bearing areas from the center toward the edge, and slope the tops of abutment and transition bent caps from the backwall to the edge, as directed, so that water drains from the surface. Give the concrete a smooth trowel finish. Construct bearing areas for steel units in accordance with Section 441.3.K.5, “Bearing and Anchorage Devices.” Give the bearing area under the expansion ends of concrete slabs and slab and girder spans a steel-trowel finish to the exact grades required. Give bearing areas under elastomeric bearing pads or nonreinforced bearing seat buildups a textured, wood float finish. Do not allow the bearing area to vary from a level plane more than 1/16 in. in all directions.

Cast bearing seat buildups or pedestals for concrete units integrally with the cap or with a construction joint. Provide a latex-based mortar, an epoxy mortar, or an approved proprietary bearing mortar for bearing seat buildups cast with a construction joint. Mix mortars in accordance with the manufacturer’s recommendations. Construct pedestals of Class C concrete, reinforced as shown on the plans or as indicated in Figure 1 and Figure 2.

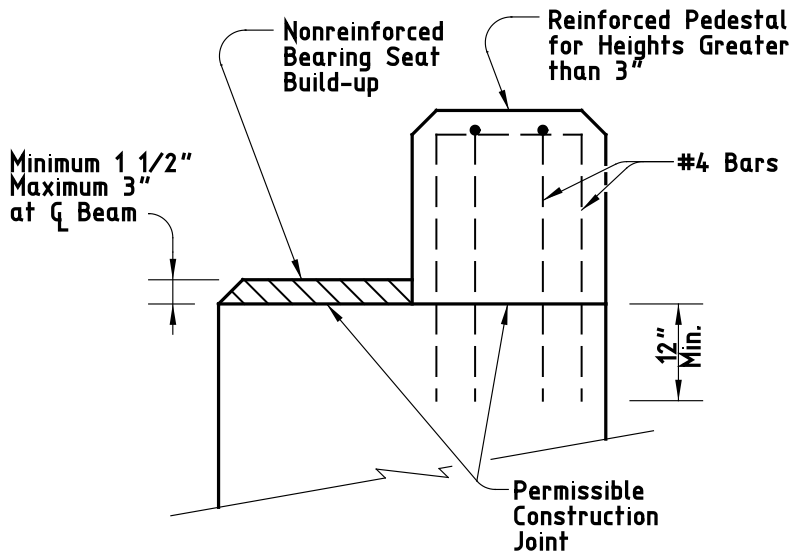

Figure 1
Section through bearing seat buildups.

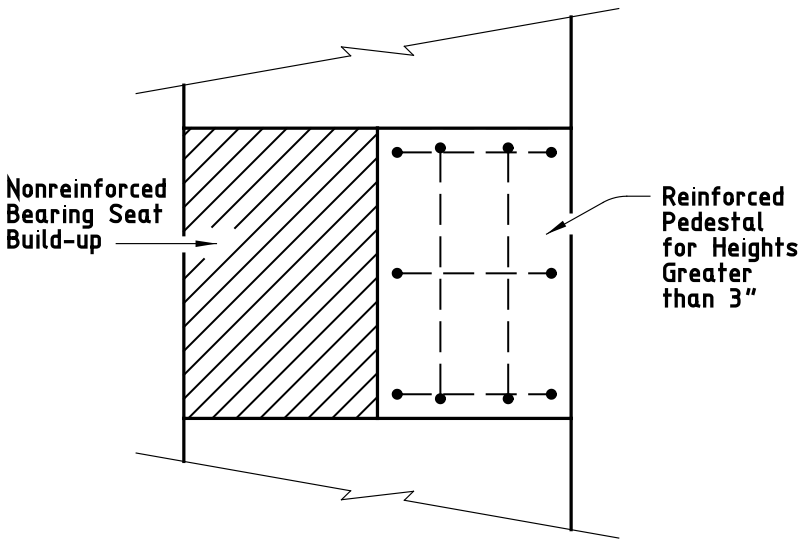

Figure 2
Plan view of bearing seat buildups.

I. Finish of Bridge Slabs. Provide camber for specified vertical curvature and transverse slopes.

For concrete flat slab and concrete slab and girder spans cast in place on falsework, provide additional camber to offset the initial and final deflections of the span as indicated in the plans. For concrete slab and girder spans using pan forms, provide camber of approximately 3/8 in. for 30-ft. spans and 1/2 in. for 40-ft. spans to offset initial and final deflections unless otherwise directed. For concrete flat slab

and concrete slab and girder spans not using pan forms, when dead load deflection is not shown on the plans, provide a camber of 1/8 in. per 10 ft. of span length but no more than 1/2 in.

Provide a camber of 1/4 in. in addition to deflection for slabs without vertical curvature on steel or prestressed concrete beams.

Use work bridges or other suitable facilities to perform all finishing operations and to provide access, if necessary, for the Engineer to check measurements for slab thickness and reinforcement cover.

As soon as the concrete has been placed and vibrated in a section wide enough to permit working, level, strike off, and screed the surface, carrying a slight excess of concrete ahead of the screed to fill all low spots.

Move longitudinal screeds across the concrete with a saw-like motion while their ends rest on headers or templates set true to the roadway grade or on the adjacent finished slab. Move transverse screeds longitudinally approximately 1/5 of the drum length for each complete out-and-back pass of the carriage.

Screed the surface of the concrete enough times and at intervals to produce a uniform surface true to grade and free of voids.

Work the screeded surface to a smooth finish with a long-handled wood or metal float or hand-float it from work bridges over the slab. Floating may not be necessary if the pan float attached to a transverse screed produces an acceptable finish. Avoid overworking the surface of the concrete. Avoid overuse of finish water.

Perform sufficient checks, witnessed by the Engineer, with a long-handled 16-ft. straightedge on the plastic concrete to ensure that the final surface will be within specified tolerances. Make the check with the straightedge parallel to the centerline. Lap each pass half over the preceding pass. Remove all high spots, and fill and float all depressions over 1/16 in. deep with fresh concrete. Continue checking and floating until the surface is true to grade and free of depressions, high spots, voids, or rough spots. Fill screed-rail support holes with concrete, and finish them to match the top of the slab.

Finish the concrete surface to a uniform texture using a carpet drag, burlap drag, or broom finish. Finish the surface to a smooth sandy texture without blemishes, marks, or scratches deeper than 1/16 in. Apply the surface texturing using a work bridge or platform immediately after completing the straightedge checks. Draw the carpet or burlap drag longitudinally along the concrete surface, adjusting the surface contact area or pressure to provide a satisfactory coarsely textured surface. A broom finish may be performed using a fine bristle broom transversely.

Coat the concrete surface immediately after the carpet or burlap drag, or broom finish with a single application of evaporation retardant at a rate recommended by the manufacturer. Do not allow more than 10 min. to elapse between the texturing at any location and application of evaporation retardant. The evaporation retardant may be applied using the same work bridge used for surface texturing. Do not work the concrete surface once the evaporation retardant has been applied.

Apply interim and final curing in accordance with Section 420.4.J, “Curing Concrete.”

The Contractor is responsible for the ride quality of the finished bridge slab. The Engineer will use a 10-ft. straightedge (1/8 in. in 10 ft.) to verify ride quality and to determine locations where corrections are needed. If the Engineer determines that the ride quality is unacceptable, submit a plan for approval to produce a ride of acceptable quality. Make all corrections for ride before saw-cutting grooves.

Saw-cut grooves in the hardened concrete of bridge slabs, bridge approach slabs, and direct-traffic culverts to produce the final texturing after completion of the required curing period. Cut grooves perpendicular to the structure centerline. Cut grooves continuously across the slab to within 18 in. of the barrier rail, curb, or median divider. At skewed metal expansion joints in bridge slabs, adjust groove cutting by using narrow-width cutting heads so that all grooves end within 6 in. of the joint,

measured perpendicular to the centerline of the metal joint. Leave no ungrooved surface wider than 6 in. adjacent to either side of the joint. Ensure that the minimum distance to the first groove, measured perpendicular to the edge of the concrete joint or from the junction between the concrete and the metal leg of the joint, is 1 in. Cut grooves continuously across construction joints or other joints in the concrete that are less than 1/2 in. wide. Apply the same procedure described above where barrier rails, curbs, or median dividers are not parallel to the structure centerline to maintain the 18-in. maximum dimension from the end of the grooves to the gutter line. Cut grooves continuously across formed concrete joints.

When the plans call for a concrete overlay to be placed on the slab (new construction) or on prestressed concrete box beams or other precast elements, give a carpet drag, burlap drag, or broom finish to all concrete surfaces to be overlaid. Saw-grooving is not required in this case. Provide an average texture depth for the finish of approximately 0.035 in. with no individual test falling below 0.020 in., unless otherwise shown on the plans, when tested in accordance with Tex-436-A. If the texture depth falls below what is intended, revise finishing procedures to produce the desired texture.

When the plans require an asphalt seal, with or without overlay, on the slab (new construction), on prestressed concrete box beams, or on other precast elements, give all concrete surfaces to be covered a lightly textured broom or carpet drag finish. Provide an average texture depth of approximately 0.025 in. when tested in accordance with Tex-436-A.

J. Curing Concrete. Obtain approval of the proposed curing methods, equipment, and materials before placing concrete. The Engineer may require the same curing methods for like portions of a single structure. Inadequate curing or facilities may delay all concrete placement on the job until remedial action is taken.

A curing day is a calendar day when the temperature, taken in the shade away from artificial heat, is above 50°F for at least 19 hr. or, on colder days if the temperature of all surfaces of the concrete is maintained above 40°F, for the entire 24 hr. The required curing period begins when all concrete has attained its initial set. Tex-440-A may be used to determine when the concrete has attained its initial set.

Cure all concrete for 4 consecutive days except as noted in Table 1.

Table 1
Exceptions to 4-Day Curing

Description	Type of Cement	Required Curing Days
Upper surfaces of bridge slabs, top slab of direct-traffic culverts, and concrete overlays	I or III	8
	II or I/II	10
	All types with supplementary cementing materials	10
Concrete piling buildups	All	6

For upper surfaces of bridge slabs, bridge approach slabs, median and sidewalk slabs, and culvert top slabs constructed using Class S concrete, apply interim curing using a Type 1-D curing compound as soon as possible after application of the evaporation retardant and after the water sheen has disappeared, but no more than 45 min. after application of the evaporation retardant. Apply membrane interim curing using a work bridge or other approved apparatus to ensure a uniform application. Water-cure for final curing in accordance with this Section, starting as soon as possible without damaging the surface finish. Maintain the water curing for the duration noted in Table 1. Place polyethylene sheeting, burlap-polyethylene blankets, laminated mats, or insulating curing mats in direct contact with the slab when the air temperature is expected to drop below 40°F during the

first 72 hr. of the curing period. Weigh down these curing materials with dry mats to maintain direct contact with the concrete and to provide insulation against cold weather. Supplemental heating or insulation may be required in cold and wet weather if the insulating cotton mats become wet or if the concrete drops below the specified curing temperature. Avoid applying heat directly to concrete surfaces.

For the top surface of any concrete unit upon which concrete is to be placed and bonded at a later interval (stub walls, risers, etc.) and other superstructure concrete (curbs, wingwalls, parapet walls, etc.), use only water curing in accordance with this Section.

Cure all other concrete as specified in the pertinent Items. Use the following methods for curing concrete, subject to the requirements of this Item.

1. **Form Curing.** When forms are left in intimate contact with the concrete, other curing methods are not required except for exposed surfaces and for cold weather protection. If forms are removed before the 4-day required curing period, use another approved curing method.
2. **Water Curing.** Keep all exposed surfaces of the concrete wet continuously for the required curing time. Use water curing that meets the requirements for concrete mixing water in Section 421.2.D, "Water." Do not use seawater or water that stains or leaves an unsightly residue.
   a. **Wet Mats.** Keep the concrete continuously wet by maintaining wet cotton mats in direct contact with the concrete for the required curing time. If needed, place damp burlap blankets made from 9-oz. stock on the damp concrete surface for temporary protection before applying cotton mats. Then place the dry mats and wet them immediately after they are placed. Weight the mats adequately to provide continuous contact with all concrete. Cover surfaces that cannot be cured by direct contact with mats, forming an enclosure well anchored to the forms or ground so that outside air cannot enter the enclosure. Provide sufficient moisture inside the enclosure to keep all surfaces of the concrete wet.
   b. **Water Spray.** Overlap sprays or sprinklers to keep all unformed surfaces continuously wet.
   c. **Ponding.** Cover the surfaces with at least 2 in. of clean granular material, kept wet at all times, or at least 1 in. deep water. Use a dam to retain the water or saturated granular material.
3. **Membrane Curing.** Unless otherwise shown on the plans, choose either Type 1-D or Type 2 membrane-curing compound when membrane curing is permitted. Type 1-D (Resin Base Only) is required for interim curing bridge slabs and top slabs of direct-traffic culverts and all other surfaces that require a higher grade of surface finish. For substructure concrete provide only 1 type of curing compound on any 1 structure.

   Apply membrane curing just after free moisture has disappeared at a rate of approximately 180 sq. ft. per gallon. Do not spray curing compound on projecting reinforcing steel or concrete that will later form a construction joint. Do not apply membrane curing to dry surfaces. Dampen formed surfaces and surfaces that have been given a first rub so that they are moist at the time of application of the membrane.

   When membrane is used for complete curing, leave the film unbroken for the minimum curing period specified. Correct damaged membrane immediately by reapplication of membrane. Polyethylene sheeting, burlap-polyethylene mats, or laminated mats in close contact with the concrete surfaces are equivalent to membrane curing.

K. Removal of Forms and Falsework. Unless otherwise directed, forms for vertical surfaces may be removed after the concrete has aged 12 hr. after initial set provided the removal can be done without damage to the concrete. Keep forms for mass placements, defined in Section 420.4.G.14, "Mass Placements," in place for 4 days following concrete placement.

Remove forms for inside curb faces and for bridge rails whenever removal can be done without damage to the curb or railing.

Leave in place weight-supporting forms and falsework spanning more than 1 ft. for all bridge components and culvert slabs except as directed otherwise until the concrete has attained a compressive strength of 2,500 psi. Remove forms for other structural components as necessary.

Remove inside forms (walls and top slabs) for box culverts and sewers after concrete has attained a compressive strength of 1,800 psi if an approved overhead support system is used to transfer the weight of the top slab to the walls of the box culvert or sewer before removal of the support provided by the forms.

Forms or parts of forms may be removed only if constructed to permit removal without disturbing forms or falsework required to be left in place for a longer period on other portions of the structure.

Remove all metal appliances used inside forms for alignment to a depth of at least 1/2 in. from the concrete surface. Make the appliances so that metal may be removed without undue chipping or spalling of the concrete, and so that it leaves a smooth opening in the concrete surface when removed. Do not burn off rods, bolts, or ties.

Remove all forms and falsework unless otherwise directed.

L. Defective Work. Repair defective work as soon as possible. Remove and replace at the expense of the Contractor any defect that cannot be repaired to the satisfaction of the Engineer.

M. Ordinary Surface Finish. Apply an ordinary surface finish to all concrete surfaces as follows:

- Chip away all loose or broken material to sound concrete where porous, spalled, or honeycombed areas are visible after form removal.
- Repair spalls by saw-cutting and chipping at least 1/2 in. deep, perpendicular to the surface to eliminate feather edges. Repair shallow cavities using a latex adhesive grout, cement mortar, or epoxy mortar as approved. Repair large areas using concrete as directed or approved.
- Clean and fill holes or spalls caused by the removal of form ties, etc., with latex grout, cement grout, or epoxy grout as approved. Fill only the holes. Do not blend the patch with the surrounding concrete. On surfaces to receive a rub finish in accordance with Item 427, “Surface Finishes for Concrete,” chip out exposed parts of metals chairs to a depth of 1/2 in. and repair the surface.
- Remove all fins, runs, drips, or mortar from surfaces that will be exposed. Smooth all form marks and chamfer edges by grinding or dry-rubbing.
- Ensure that all repairs are dense, well bonded, and properly cured. Finish exposed large repairs to blend with the surrounding concrete where a higher class of finish is not specified.

Unless noted otherwise, apply an ordinary surface finish as the final finish to the following exposed surfaces:

- inside and top of inlets,
- inside and top of manholes,
- inside of sewer appurtenances,
- inside of culvert barrels,
- bottom of bridge slabs between girders or beams, and
- vertical and bottom surfaces of interior concrete beams or girders.

Form marks and chamfer edges do not need to be smoothed for the inside of culvert barrels and the bottom of bridge slabs between girders or beams.

420.5. Measurement. This Item will be measured by the cubic yard, square yard, foot, square foot, or by each structure.

A. General. Concrete quantities will be based on the dimensions shown on the plans or those established in writing by the Engineer.

In determining quantities, no deductions will be made for chamfers less than 2 in. or for embedded portions of steel or prestressed concrete beams, piling, anchor bolts, reinforcing steel, drains, weep holes, junction boxes, electrical or telephone conduit, ducts and voids for prestressed tendons, or embedded portions of light fixtures.

For slab and girder spans using pan forms, a quantity will be included for the screed setting required to provide proper camber in the roadway surface after form removal.

For slabs on steel or prestressed concrete beams, an estimated quantity for the haunch between the slab and beams will be included. No measurement will be made during construction for variation in the amount of haunch concrete due to variations in camber of the beams.

For cast-in-place slabs on slab beams, double-T beams, or box beams, the combination of span length, theoretical camber in beams, computed deflections, and plan vertical curve will be taken into account in determining the quantity for the slab.

Additional concrete that may be required by an adjustment of the profile grade line during construction, to insure proper slab thickness, will not be measured for payment.

Variation in concrete headwall quantity incurred when an alternate bid for pipe is permitted will not be cause for payment adjustment.

Mass placements may be either a plans quantity item or measured in place as indicated.

Quantities revised by a change in design, measured as specified, will be increased or decreased and included for payment.

B. Plans Quantity. Structure elements designated in Table 2 and measured by the cubic yard are plans quantity measurement items. The quantity to be paid for plans quantity items is the quantity shown in the proposal unless modified by Article 9.2, "Plans Quantity Measurement." Additional measurements or calculations will be made if adjustments of quantities are required.

No adjustment will be made for footings or other in-ground elements where the Contractor has been allowed to place concrete in an excavation without forms.

Table 2
Plans Quantity Payment
(Cubic Yard Measurement Only)

Culverts and culvert wing walls	Abutments
Headwalls for pipe	Slab and girder spans (pan form)
Retaining walls	Footings
Inlets and manholes	Pile bent caps
Shear key concrete for box and slab beams	Concrete wearing surface on pre-cast box beams, slab beams or double-T beams
Bridge approach slabs	Cast-in-place concrete slab spans

Note: Other structure elements, including pier and bent concrete, may be paid for as "plans quantity" when shown on the plans.

C. Measured in Place. Items not paid for as "plans quantity" will be measured in place.

420.6. Payment. The work performed and materials furnished in accordance with this Item and measured as provided under "Measurement" will be paid for at the unit price bid for the various structure elements specified of the various classes of concrete. Mass placements, as defined in Section 420.4.G.14, "Mass Placements," will be paid for separately for the various classes of concrete. This price is full compensation for furnishing, hauling, and mixing concrete materials; furnishing, bending, fabricating,

splicing, welding and placing the required reinforcement; clips, blocks, metal spacers, ties, wire, or other materials used for fastening reinforcement in place; placing, finishing, curing, and grooving concrete; applying ordinary surface finish; furnishing and placing drains, metal flashing strips, and expansion-joint material; excavation, subgrade preparation, and disposal of excavated material for bridge approach slabs; and forms and falsework, equipment, labor, tools, and incidentals.

Diaphragm concrete will not be paid for directly but is subsidiary to the slab unless otherwise shown on the plans.

Design and installation of foundations for falsework is at the Contractor's expense.

The following procedure will be used to evaluate concrete where 1 or more project acceptance test specimens fail to meet the required design strength specified in Item 421, "Hydraulic Cement Concrete," or in the plans:

- The concrete for a given placement will be considered structurally adequate and accepted at full price if the average of all test results for specimens made at the time of placement meets the required design strength provided that no single test result is less than 85% of the required design strength.
- The Engineer will perform a structural review of the concrete to determine its adequacy to remain in service if the average of all test results for specimens made at the time of placement is less than the required design strength or if any test results are less than 85% of the required design strength. If cores are required to determine the strength of the in-situ concrete, take cores at locations designated by the Engineer in accordance with Tex-424-A. The coring and testing of the cores will be at the Contractor's expense. The Engineer will test the cores.
- If all of the tested cores meet the required design strength, the concrete will be paid for at the full price.
- If any of the tested cores do not meet the required design strength but the average strength attained is determined to be structurally adequate, the Engineer will determine the limits of the pay adjustment. The average strength of the cores tested will be used in the pay adjustment formula.
- Remove concrete that is not structurally adequate.
- Concrete that has been determined to be structurally adequate may be accepted at an adjusted price based on the following formula:

  $A = 0.10Bp + 0.75(Sa/Ss)^2\ Bp$

  where:

  A = Amount to be paid per unit of measure for the entire placement in question
  Sa = Actual strength from cylinders or cores. Use values from cores, if taken.
  Ss = Minimum required strength (specified)
  Bp = Unit bid price.

- The decision to reject structurally inadequate concrete or to apply the pay adjustment will be made no later than 56 days after placement.

MODIFICATIONS TO ITEM Tx464

REINFORCED CONCRETE PIPE

This modification page modifies, amplifies, or amends the technical specifications and plans. In the event of discrepancy, this modification shall take precedence over the plans and the technical specifications.

Paragraph 464.2 Materials

Circular pipe shall be class III.

Paragraph 464.5 Payment

Payment for excavation, bedding and backfill for structures will be considered subsidiary to payment for "Reinforced Concrete Pipe."

ITEM 464

REINFORCED CONCRETE PIPE

464.1. Description. Furnish and install reinforced concrete pipe, materials for precast concrete pipe culverts, or precast concrete storm drain mains, laterals, stubs, and inlet leads.

464.2. Materials.

A. Fabrication. Provide precast reinforced concrete pipe that conforms to the design shown on the plans and to the following:

- ASTM C 76 or ASTM C 655 unless otherwise shown on the plans for circular pipe, or
- ASTM C 506 for arch pipe, or
- ASTM C 507 for horizontal elliptical pipe.

Provide precast concrete pipe that is machine-made or cast by a process that will provide for uniform placement of the concrete in the form and compaction by mechanical devices that will assure a dense concrete. Mix concrete in a central batch plant or other approved batching facility where the quality and uniformity of the concrete is assured. Do not use transit-mixed concrete for precast concrete pipe. When sulfate-resistant concrete is required, do not use Class C fly ash.

Do not place more than 2 holes for lifting and placing in the top section of precast pipe. Cast, cut, or drill the lifting holes in the wall of the pipe. The maximum hole diameter is 3 in. at the inside surface of the pipe wall and 4 in. at the outside surface. Do not cut more than 1 longitudinal wire or 2 circumferential wires per layer of reinforcing steel when locating lift holes.

B. Design.

1. **General.** The class and D-load equivalents are shown in Table 1. Furnish arch pipe in accordance with ASTM C 506 and the dimensions shown in Table 2. Furnish horizontal elliptical pipe in accordance with ASTM C 507 and the dimensions shown in Table 3. For arch pipe and horizontal elliptical pipe the minimum height of cover required is 1 ft.

Table 1
Circular Pipe
ASTM C 76 & ASTM C 655

Class	D-Load
I	800
II	1,000
III	1,350
IV	2,000
V	3,000

Table 2
Arch Pipe

Design Size	Equivalent Diameter (in.)	Rise (in.)	Span (in.)
1	18	13-1/2	22
2	21	15-1/2	26
3	24	18	28-1/2
4	60	22-1/2	36-1/4
5	36	26-5/8	43-3/4
6	42	31-5/16	51-1/8
7	48	36	58-1/2
8	54	40	65
9	60	45	73
10	72	54	88

Table 3
Horizontal Elliptical Pipe

Design Size	Equivalent Diameter (in.)	Rise (in.)	Span (in.)
1	18	14	23
2	24	19	30
3	27	22	34
4	30	24	38
5	33	27	42
6	36	29	45
7	39	32	49
8	42	34	53
9	48	38	60
10	54	43	68

2. **Jacking, Boring, or Tunneling.** Design pipe for jacking, boring, or tunneling considering the specific installation conditions such as the soil conditions, installation methods, anticipated deflection angles, and jacking stresses. When requested, provide design notes and drawings signed and sealed by a Texas licensed professional engineer.

C. Physical Test Requirements. Acceptance of the pipe will be determined by the results of the following tests:

- material tests required in ASTM C 76, C 655, C 506, or C 507,
- absorption tests in accordance with ASTM C 497,
- three-edge bearing tests in accordance with ASTM C 497 (Perform 3-edge bearing tests on 1 pipe for each 300 pipes or fraction thereof for each design or shape, size, class, or D-load produced within 30 calendar days. Test for the load to produce a 0.01-in. crack or 15% in excess of the required D-load, whichever is less. Test the pipe to ultimate load if so directed. Tested pipe that satisfies the requirements of Section 464.2.F., “Causes for Rejection,” may be used for

construction. As an alternate to the 3-edge bearing test, concrete pipe 54 in. in diameter and larger may be accepted on the basis of compressive strength of cores cut from the wall of the pipe. The manufacturer must determine the compressive strength of the samples. Obtain, cure, prepare, and test the cores in accordance with ASTM C 497. The manufacturer must plug and seal core holes in the pipe wall after testing.), and

- inspection of the finished pipe to determine its conformance with the required design and its freedom from defects.

D. Marking. Clearly mark the following information on each section of pipe:

- class or D-load of pipe,
- ASTM designation,
- date of manufacture,
- name or trademark of the manufacturer, and
- pipe to be used for jacking and boring.

For pipe with elliptical reinforcement, clearly mark 1 end of each section during the process of manufacture or immediately thereafter. Mark the pipe on the inside and the outside of opposite walls to show the location of the top or bottom of the pipe as it should be installed unless the external shape of the pipe is such that the correct position of the top and bottom is obvious. Mark the pipe section by indenting or painting with waterproof paint.

E. Inspection. Provide facilities and access to allow for inspection regarding the quality of materials, the process of manufacture, and the finished pipe at the pipe manufacturing plant. In addition, provide access for inspection of the finished pipe at the project site before and during installation.

F. Causes for Rejection. Individual sections of pipe may be rejected for any of the following:

- fractures or cracks passing through the shell, with the exception of a single end crack that does not exceed the depth of the joint;
- defects that indicate imperfect proportioning, mixing, and molding;
- surface defects indicating honeycombed or open texture;
- damaged ends where such damage would prevent making a satisfactory joint;
- any continuous crack having a surface width of 0.01 in. or more and extending for a length of 12 in. or more.

G. Repairs. Make repairs if necessary because of occasional imperfections in manufacture or accidental damage during handling. The Engineer may accept pipe with repairs that are sound, properly finished, and cured in conformance with pertinent specifications.

H. Rejections. Allow access for the marking of rejected pipe. Rejected pipe will be plainly marked by the Engineer by painting colored spots over the Department monogram on the inside wall of the pipe and on the top outside wall of the pipe. The painted spots will be no larger than 4 in. in diameter. The rejected pipe will not be defaced in any other manner. Remove the rejected pipe from the project and replace with pipe meeting the requirements of this Item.

I. Jointing Materials. Use any of the materials described herein for the making of joints, unless otherwise shown on the plans. Furnish a manufacturer's certificate of compliance for all jointing materials except mortar.

1. **Mortar.** Provide mortar for joints that meets the requirements of Section 464.3.C, "Jointing."
2. **Cold-Applied, Plastic Asphalt Sewer Joint Compound.** Provide a material that consists of natural or processed asphalt base, suitable volatile solvents, and inert filler. The consistency is to be such that the ends of the pipe can be coated with a layer of the compound up to 1/2 in. thick by means of a trowel. Provide a joint compound that cures to a firm, stiff plastic condition after application. Provide a material of a uniform mixture. If any small separation occurs in the container, stir to a uniform mix before using.

Provide a material that meets the requirements of Table 4 when tested in accordance with Tex-526-C.

Table 4
Cold-Applied, Plastic Asphalt Sewer Joint Compound
Material Requirements

Composition	Analysis
Asphalt base, 100%–% volatiles–% ash, % by weight	28–45
Volatiles, 212°F evaporation, 24 hr., % by weight	10–26
Mineral matter, determined as ash, % by weight	30–55
Consistency, cone penetration, 150 q, 5 sec., 77°F	150–275

3. **Rubber Gaskets.** Provide gaskets that conform to ASTM C 361 or C 443. Meet the requirements of ASTM C 443 for design of the joints and permissible variations in dimensions.
4. **Pre-Formed Flexible Joint Sealants.** Pre-formed flexible joint sealants may be used for sealing joints of tongue-and-groove concrete pipe. Provide flexible joint sealants that meet the requirements of ASTM C 990. Use flexible joint sealants that do not depend on oxidizing, evaporating, or chemical action for its adhesive or cohesive strength. Supply in extruded rope form of suitable cross section. Provide a size of the pre-formed flexible joint sealant in accordance with the manufacturer's recommendations and large enough to properly seal the joint**.** Flexible joint sealants must be protected by a suitable wrapper, and the jointing material must maintain integrity when the wrapper is removed.

464.3. Construction.

A. Excavation, Shaping, Bedding, and Backfill. Excavate, shape, bed, and backfill in accordance with Item 400, "Excavation and Backfill for Structures," except where jacking, boring, or tunneling methods are permitted. Jack, bore, or tunnel the pipe in accordance with Item 476, "Jacking, Boring, or Tunneling Pipe or Box." If joints consist of materials other than mortar, immediate backfilling is permitted. Take special precautions in placing and compacting the backfill to avoid any movement of the pipe or damage to the joints. Unless otherwise shown on the plans or permitted in writing, do not use heavy earth-moving equipment to haul over the structure until a minimum of 4 ft. of permanent or temporary compacted fill has been placed over the structure. Remove and replace pipe damaged by the Contractor at no expense to the Department.

B. Laying Pipe. Unless otherwise authorized, start the laying of pipe on the bedding at the outlet end with the spigot or tongue end pointing downstream, and proceed toward the inlet end with the abutting sections properly matched, true to the established lines and grades. Fit, match, and lay the pipe to form a smooth, uniform conduit. Where bell-and-spigot pipe is used, cut cross trenches in the foundation to allow the barrel of the pipe to rest firmly upon the bedding. Do not cut cross trenches more than 2 in. larger than the bell ends of the pipe. Lower sections of pipe into the trench without damaging the pipe or disturbing the bedding and the sides of the trench. Carefully clean the ends of the pipe before the pipe is placed. Prevent the earth or bedding material from entering the pipe as it is laid. When elliptical pipe with circular reinforcing or circular pipe with elliptical reinforcing is used, lay the pipe in the trench so that the markings for the top or bottom are not more than 5° from the vertical plane through the longitudinal axis of the pipe. Remove and re-lay, without extra compensation, pipe that is not in alignment or that shows excessive settlement after laying.

Lay multiple lines of reinforced concrete pipe with the centerlines of the individual barrels parallel. Unless otherwise shown on the plans, use the clear distances between outer surfaces of adjacent pipes shown in Table 5. For arch pipe or horizontal elliptical pipe use the equivalent diameter from Table 2 or Table 3 to determine the clear distance requirement in Table 5.

Table 5
Minimum Clear Distance between Pipes

Equivalent Diameter	Min. Clear Distance
18 in.	9 in.
24 in.	11 in.
30 in.	1 ft. 1 in.
36 in.	1 ft. 3 in.
42 in.	1 ft. 5 in.
48 in.	1 ft. 7 in.
54 in.	1 ft. 11 in.
60 to 84 in.	2 ft.

C. Jointing. Make available an appropriate rolling device similar to an automobile mechanic's "creeper" for conveyance through small-size pipe structures.

1. **Joints Sealed with Hydraulic Cement Mortar.** Use mortar consisting of 1 part cement, 2 parts sand, and enough water to make a plastic mix. Clean and wet the pipe ends before making the joint. Plaster the lower half of the bell or groove and the upper half of the tongue or spigot with mortar. After the pipes are tightly jointed, pack mortar into the joint from both inside and outside the pipe. Finish the inside smooth and flush with adjacent joints of pipe. For tongue-and-groove joints, form a bead of semicircular cross section over the joint outside the pipe, extending at least 1 in. on each side of the joint. For bell-and-spigot joints, form the mortar to a 45° fillet between the outer edge of the bell and the spigot. Cure mortar joints by keeping the joints wet for at least 48 hr. or until the backfill has been completed, whichever comes first. When mortar joints are used, do not place fill or backfill until the jointing material has cured for at least 6 hr. Do not conduct jointing when the atmospheric temperature is at or below 40°F. Protect mortared joints against freezing by backfilling or other approved methods for at least 24 hr.

   Driveway culverts do not require mortar banding on the outside of the pipe.

   With approval, pipes that are large enough for a person to enter may be furnished with the groove between 1/2 in. and 3/4 in. longer than the tongue. Such pipe may be laid and backfilled without mortar joints. After the backfilling has been completed, clean the space on the interior of the pipe between the end of the tongue and the groove of all foreign material, thoroughly wet and fill with mortar around the entire circumference of the pipe, and finish flush.

2. **Joints Using Cold-Applied, Plastic Asphalt Sewer Joint Compound.** Ensure that both ends of the pipes are clean and dry. Trowel or otherwise place a 1/2-in.-thick layer of the compound in the groove end of the pipe covering at least 2/3 of the joint face around the entire circumference. Next, shove home the tongue end of the next pipe with enough pressure to make a tight joint. After the joint is made, remove any excess mastic projecting into the pipe. Backfill after the joint has been inspected and approved.

3. **Joints Using Rubber Gaskets.** Make the joint assembly according to the recommendations of the gasket manufacturer. When using rubber gaskets, make joints watertight. Backfill after the joint has been inspected and approved.

4. **Joints Using Pre-Formed Flexible Joint Sealants.** Install pre-formed flexible joint sealants in accordance with the manufacturer's recommendations. Place the joint sealer so that no dirt or other deleterious materials come in contact with the joint sealing material. Pull or push home the pipe with enough force to properly seal the joint. Remove any joint material pushed out into the interior of the pipe that would tend to obstruct the flow. When the atmospheric temperature is below 60°F, store pre-formed flexible joint sealants in an area warmed to above 70°F or artificially warm to this temperature in an approved manner. Apply flexible joint sealants to pipe joints immediately before placing pipe in trench, and then connect pipe to previously laid pipe. Backfill after the joint has been inspected and approved.

D. Connections and Stub Ends. Make connections of concrete pipe to existing pipes, pipe storm drains, or storm drain appurtenances as shown on the plans.

Mortar or concrete the bottom of existing structures if necessary to eliminate any drainage pockets created by the connections. Repair any damage to the existing structure resulting from making the connections.

Unless otherwise shown in the plans, make connections between concrete pipe and corrugated metal pipe with a suitable concrete collar having a minimum thickness of 4 in.

Finish stub ends for connections to future work not shown on the plans by installing watertight plugs into the free end of the pipe.

Fill lift holes with concrete, mortar, or precast concrete plugs after the pipe is in place.

464.4. Measurement. This Item will be measured by the foot. Measurement will be made between the ends of the pipe barrel along the flow line, not including safety end treatments. Safety end treatments will be measured in accordance with Item 467, "Safety End Treatment." Pipe that will be jacked, bored, or tunneled will be measured in accordance with Item 476, "Jacking, Boring, or Tunneling Pipe or Box." Measurement of spurs, branches, or new connecting pipe will be made from the intersection of the flow line with the outside surface of the pipe into which it connects. Where inlets, headwalls, catch basins, manholes, junction chambers, or other structures are included in lines of pipe, the length of pipe tying into the structure wall will be included for measurement, but no other portion of the structure length or width will be included.

For multiple pipes, the measured length will be the sum of the lengths of the barrels.

This is a plans quantity measurement Item. The quantity to be paid is the quantity shown in the proposal unless modified by Article 9.2. "Plans Quantity Measurement." Additional measurements or calculations will be made if adjustments of quantities are required.

464.5. Payment. The work performed and materials furnished in accordance with this Item and measured as provided under "Measurement" will be paid for at the unit price bid for "Reinforced Concrete Pipe," "Reinforced Concrete Pipe (Arch)," or "Reinforced Concrete Pipe (Elliptical)" of the size and D-load specified or of the size and class specified. This price is full compensation for constructing, furnishing, transporting, placing, and joining pipes; shaping the bed; cutting pipes on skew or slope; connecting to new or existing structures; breaking back, removing, and disposing of portions of the existing structure; replacing portions of the existing structure; cutting pipe ends on skew or slope; and equipment, labor, tools, and incidentals.

Protection methods for excavations greater than 5 ft. deep will be measured and paid for as required under Item 402, "Trench Excavation Protection," or Item 403, "Temporary Special Shoring." Excavation, shaping, bedding, and backfill will be paid for in accordance with Item 400, "Excavation and Backfill for Structures." When jacking, boring, or tunneling is used at the Contractor's option, payment will be made under this Item. When jacking, boring or tunneling is required, payment will be made under Item 476, "Jacking, Boring or Tunneling Pipe or Box."

MODIFICATIONS TO ITEM Tx465

MANHOLES AND INLETS

This modification page modifies, amplifies, or amends the technical specifications and plans. In the event of discrepancy, this modification shall take precedence over the plans and the technical specifications.

Paragraph 465.1 Description

This item shall govern for the installation of concrete junction boxes, inlets, and other drainage structures.

Paragraph 465.3 Construction

All junction boxes shall include cast iron grate or access manhole cover. Manhole covers shall be per the City of Leander standard found herein and as provided by the City.

Paragraph 465.4 Measurement

Junction boxes with grate inlet or access manhole shall be measured per each installed per size and type. All excavation, backfill, reinforcing material, labor, and equipment required for complete installation shall be subsidiary to the junction box pay item and shall not be measured separately.

Paragraph 465.5 Payment

Junction boxes with grate inlet or access manhole shall be paid for per each installed at the unit price bid for each size and type. All excavation, backfill, reinforcing material, labor, and equipment required for complete installation shall be subsidiary to the junction box pay item and shall not be paid for separately.

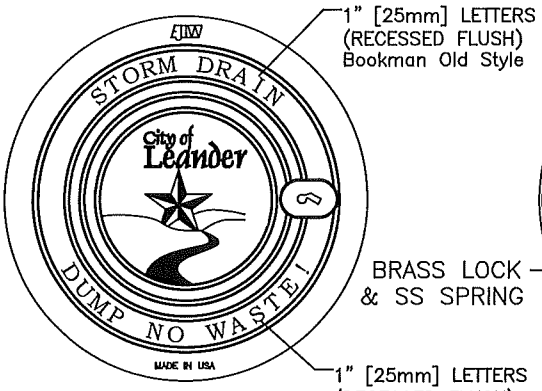

COVER TOP VIEW

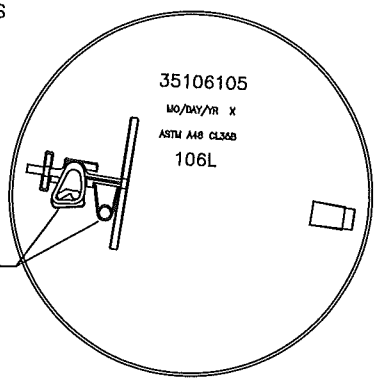

BOTTOM VIEW OF COVER

RING & COVER TOP VIEW

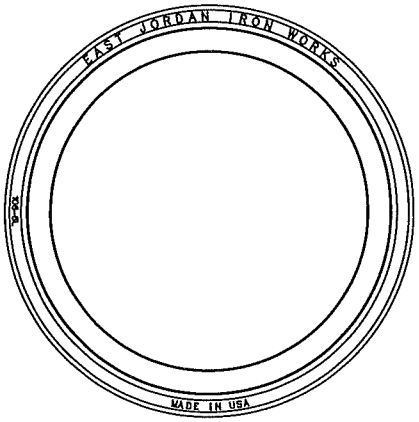

RING TOP VIEW

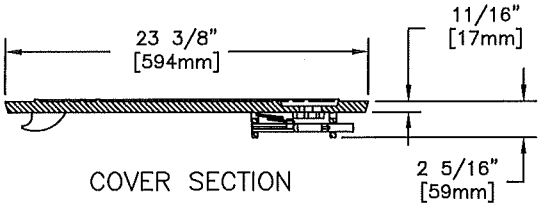

COVER SECTION

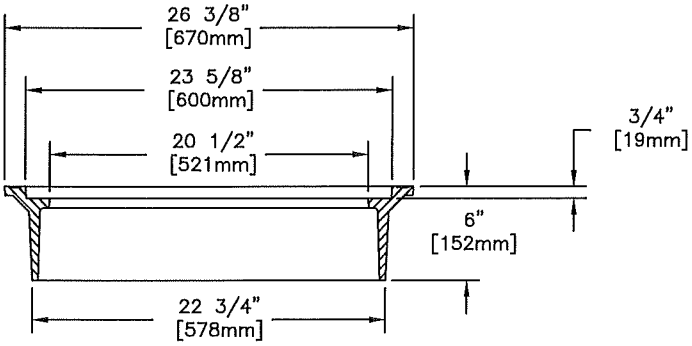

FRAME SECTION

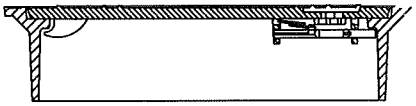

RING & COVER SECTION

MANHOLE ASSEMBLY WITH LOCK	EST. WT. COVER: 86 LBS 39kg RING: 95 LBS 43kg TOTAL: 181 LBS 82kg
EAST JORDAN IRON WORKS PRODUCT NO. 35505205 OR APPROVED EQUAL	OPEN AREA N/A
	MAT'L SPEC. COVER – GRAY IRON ASTM A48 CL35B FRAME – GRAY IRON ASTM A48 CL35B

LOAD RATING

NON-TRAFFIC

STATE OF TEXAS
WAYNE S. WATTS
86134
LICENSED
PROFESSIONAL ENGINEER

Wayne S. Watts
02/04/14

City Of Leander, Texas

DETAIL #107-2

STORM SEWER INLET COVER
(LOCKING)

ITEM 465

MANHOLES AND INLETS

465.1. Description. Construct manholes and inlets, complete in place or to the stage detailed, including furnishing and installing frames, grates, rings and covers. Drainage junction boxes are classified as manholes.

465.2. Materials. Furnish materials in accordance with the following:

- Item 420, "Concrete Structures"
- Item 421, "Hydraulic Cement Concrete"
- Item 440, "Reinforcing Steel"
- Item 471, "Frames, Grates, Rings, and Covers."

Precast manholes, inlets, risers, and appurtenances are acceptable unless otherwise shown. Alternate designs for precast items must be acceptable to the Engineer and not deviate from the functional dimensions given. Alternate designs are to be designed and sealed by a licensed professional engineer.

A. Concrete. Furnish Class A concrete for cast-in-place manholes and inlets unless otherwise shown on the plans. Furnish Class A concrete or concrete meeting ASTM C 478 for precast manholes and inlets. Air-entrained concrete will not be required in precast concrete members.

B. Mortar. Furnish mortar composed of 1 part hydraulic cement and 2 parts clean sand. Hydrated lime or lime putty may be added to the mix to a maximum of 10% by weight of the total dry mix.

C. Bricks. Furnish first-quality, sound, perfectly shaped bricks. Provide clay or shale bricks that are homogeneous and thoroughly and uniformly hard-burned and that meet ASTM C 32, Grade MS or MM. Provide concrete bricks meeting ASTM C 55, Type I (Grade S-I). The maximum allowable water absorption of completely dry bricks is 16% by weight when submerged in water for 24 hr.

D. Concrete Blocks. Provide concrete blocks that meet ASTM C 139.

E. Cast Iron or Aluminum. Provide supports and steps conforming to the shape and dimensions shown on the plans that meet the requirements of ASTM A 48, Class 35B, for gray iron castings or ASTM A 536, Grade 65-45-12, for ductile iron castings. Steps may also be aluminum meeting ASTM B 221, Alloy 6005-T5. Provide steps in accordance with ASTM C 478, Section 16, "Steps and Ladders."

F. Timber. Provide sound timber for temporary covers when used with Stage I construction (see Section 465.3, "Construction") that is a minimum of 3 in. nominal thickness and reasonably free of knots and warps.

G. Other Materials. Commercial-type hardware of other materials may be used with prior approval.

465.3. Construction.

A. General. All types of manholes and inlets may be built either in 1 stage or in 2 stages, described as Stage I and Stage II. Build manholes and inlets designed to match the final

roadway surface in stages. Construct Stage II after the pavement structure is substantially complete unless otherwise approved by the Engineer.

Construct the Stage I portion of manholes and inlets as shown on the plans or as specified in this Item. Furnish and install a temporary cover as approved by the Engineer.

For Stage I construction of cast iron or steel inlet units, furnish and install the sewer pipe and a temporary plug for the exposed end of the sewer pipe from the storm sewer to a point below the top of curb indicated on the plans.

For Stage II, construct the remaining wall height and top of manhole or inlet and furnish and install any frames, grates, rings and covers, manhole steps, curb beams, or collecting basins required.

Construct precast manholes and inlets in accordance with Item 420, "Concrete Structures," or ASTM C 478. Construct cast-in-place manholes and inlets in accordance with Item 420. Forms will be required for all concrete walls. Multi-project fabrication plants (as defined in Item 424, "Precast Concrete Structures (Fabrication)") that produce manholes and inlets will be approved by the Construction Division in accordance with DMS-7340, "Qualification Procedure for Multi-Project Fabrication Plants of Precast Concrete Manholes and Inlets." The Construction Division maintains a list of approved multiproject plants. Outside wall forms for cast-in-place concrete may be omitted with the approval of the Engineer if the surrounding material can be trimmed to a smooth vertical face. The outside form for concrete bases supporting brick walls may be omitted. Cast steps into the concrete walls when the concrete is placed, or drill and grout steps in place after concrete placement. Mortar steps into joints for brick walls. Use a full bed of mortar for brick work so the brick will thoroughly bond to the mortar. Construct full mortar joints no more than 1/2 in. wide for brick walls. Furnish a header course or bond course (laid perpendicular to the preceding courses) every fifth course of brick.

B. Manholes and Inlets for Precast Concrete Pipe Sewers. Construct manholes and inlets for precast concrete pipe sewers as soon as is practicable after sewer lines into or through the manhole or inlet locations are completed. Neatly cut all sewers at the inside face of the walls of the manhole or inlet and point up with mortar.

C. Manholes and Inlets for Monolithic Pipe Sewers. Construct bases for manholes and inlets on monolithic pipe sewers either monolithically with the sewer or after the sewer is constructed.

D. Manholes for Box Sewers. Cast bases for manholes for box sewers as an integral part of the sewer. Construct manholes before backfilling, or cover the manhole opening temporarily and backfill the sewer as a whole.

E. Inverts. Shape and route floor inverts passing out or through the manhole or inlet as shown on the plans. Shape by adding and shaping mortar or concrete after the base is cast or by placing the required additional material with the base.

F. Finishing Complete Manholes and Inlets. Complete manholes and inlets in accordance with the plans. Backfill to original ground elevation in accordance with Item 400, "Excavation and Backfill for Structures."

G. Finishing Stage I Construction. Complete Stage I construction by constructing the walls to the elevations shown on the plans and backfilling to required elevations in accordance with Item 400, "Excavation and Backfill for Structures."

H. Stage II Construction. Construct subgrade and base course or concrete pavement construction over Stage I manhole or inlet construction, unless otherwise approved by the Engineer. Excavate to expose the top of Stage I construction and complete the manhole or inlet in accordance with the plans and these Specifications, including backfill and cleaning of all debris from the bottom of the manhole or inlet.

I. Inlet Units. Install cast iron or steel inlet units in conjunction with the construction of concrete curb and gutter. Set the inlet units securely in position before placing concrete for curb and gutter. Form openings for the inlets and recesses in curb and gutter as shown on the plans. Place and thoroughly consolidate concrete for curb and gutter adjacent to inlets and around the inlet castings and formed openings and recesses without displacing the inlet units.

465.4. Measurement. All manholes and inlets satisfactorily completed in accordance with the plans and specifications will be measured by each manhole or inlet, complete, or by each manhole or inlet completed to the stage of construction required by the plans. Extension to inlets will be measured by each extension separately from the inlet.

465.5. Payment. The work performed and materials furnished in accordance with this Item and measured as provided under "Measurement" will be paid for as follows:

A. Complete Manholes. Payment for complete manholes will be made at the unit price bid for "Manhole (Complete)" of the type specified.

B. Complete Inlets. Payment for inlets will be made at the unit price bid for "Inlet (Complete)," of the type specified.

C. Inlet Extensions. Payment for inlet extensions will be made at the unit price bid for "Inlet Extension" of the type specified.

D. Manholes Stage I. Payment for Manholes, Stage I, will be made at the unit price bid for each "Manhole (Stage I)" of the type specified.

E. Manholes Stage II. Payment for Manholes, Stage II, will be made at the unit price bid for each "Manhole (Stage II)" of the type specified.

F. Inlets Stage I. Payment for Inlets, Stage I, will be made at the unit price bid for each "Inlet (Stage I)" of the type specified.

G. Inlets Stage II. Payment for Inlets, Stage II, will be made at the unit price bid for each "Inlet (Stage II)" of the type specified.

These price are full compensation for concrete, reinforcing steel, brick, mortar, aluminum and castings, frames, grates, rings and covers, excavation, and backfill and for all other materials, tools, equipment, labor, and incidentals.

MODIFICATIONS TO ITEM Tx467

SAFETY END TREATMENT

This modification page modifies, amplifies, or amends the technical specifications and plans. In the event of discrepancy, this modification shall take precedence over the plans and the technical specifications.

Paragraph 100.2 Construction

All safety end treatments must meet the requirements shown in the TxDOT Standard Detail Sheet included in the Plans for the type and size of pipe specified.

ITEM 467
SAFETY END TREATMENT

467.1. Description. Furnish, construct, and install safety end treatments for drainage structures.

467.2. Materials.

A. General. Furnish materials in accordance with the following:

- Item 420, "Concrete Structures"
- Item 421, "Hydraulic Cement Concrete"
- Item 432, "Riprap"
- Item 440, "Reinforcing Steel"
- Item 442, "Metal for Structures"
- Item 445, "Galvanizing"
- Item 460, "Corrugated Metal Pipe"
- Item 464, "Reinforced Concrete Pipe."

Unless otherwise shown on the plans, use Class C concrete for cast-in-place and precast concrete units. Furnish cast-in-place or precast safety end treatments unless otherwise shown on the plans. Furnish Class B concrete for concrete riprap unless otherwise shown on the plans. Provide galvanized steel for prefabricated metal end sections in accordance with Item 460, "Corrugated Metal Pipe."

Furnish pipe runners in accordance with the following:

- ASTM A 53, Type E or S, Grade B;
- ASTM A 500, Grade B; or
- API 5L, Grade X42.

Furnish plates and angles in accordance with ASTM A 36. Furnish nuts and bolts in accordance with ASTM A 307. Galvanize pipes, plates, angles, nuts, and bolts in accordance with Item 445, "Galvanizing."

B. Fabrication. Fabricate cast-in-place concrete units and precast units in accordance with Item 420, "Concrete Structures." Unless otherwise shown on the plans, when corrugated metal pipe (CMP) is specified for the pipe structure, provide either prefabricated metal end sections or mitered CMP.

Unless otherwise shown on the plans, when reinforced concrete pipe (RCP) is specified for the pipe structure, provide one of the following:

- mitered RCP or
- precast safety end treatment (SET) units. For this alternative, provide riprap only if the plans specifically require it for precast SET units.

1. SET Types.

a. Type I. Provide Type I SET consisting of reinforced concrete headwalls or wingwalls and pipe runners in accordance with the details shown on the plans when required.

b. Type II. Provide Type II SET in accordance with the details shown on the plans consisting of the following:

- CMP or RCP mitered to the proper slope, concrete riprap and pipe runners, when required;
- prefabricated metal end sections, concrete riprap and pipe runners, when required; or
- precast SET units, concrete riprap, when required, and pipe runners, when required.

2. Lifting Holes. For precast units, provide no more than 4 lifting holes in each section. Lifting holes may be cast, cut into fresh concrete after form removal, or drilled. Provide lifting holes

large enough for adequate lifting devices based on the size and weight of the section. The maximum hole diameter is 3 in. at the inside surface of the wall and 4 in. at the outside surface. Do not cut more than 1 longitudinal wire or 2 circumferential wires per layer of reinforcing steel when locating lift holes. Repair spalled areas around lifting holes.

3. **Marking.** Prior to shipment from the casting or fabrication yard, clearly mark the following on each precast unit, mitered CMP, mitered RCP, or metal end section:
   - the date of manufacture,
   - the name or trademark of the manufacturer, and
   - the type and size designation.
4. **Storage and Shipment.** Store precast units on a level surface. Do not place any loads on precast units until the design strength is reached. Do not ship units until design strength requirements have been met.
5. **Causes for Rejection.** Precast units may be rejected for not meeting any one of the specification requirements. Individual units may also be rejected for fractures or cracks passing through the wall or surface defects indicating honeycombed or open texture surfaces. Remove rejected units from the project and replace them with acceptable units meeting the requirements of this Item.
6. **Defects and Repairs.** Occasional imperfections in manufacture or accidental damage sustained during handling may be repaired. The repaired units will be acceptable if they conform to the requirements of this Item and the repairs are sound and properly finished and cured in conformance with pertinent specifications. Repair damaged galvanizing in accordance with Section 445.3.D, "Repairs."

467.3. Construction.

A. General. Remove portions of existing structures in accordance with Article 430.3, "Construction." Drill, dowel, and grout in accordance with Item 420, "Concrete Structures." Furnish concrete riprap in accordance with Item 432, "Riprap."

Provide riprap on all prefabricated metal end sections.

B. Excavation, Shaping, Bedding, and Backfill. Excavate, shape, bed, and backfill in accordance with Item 400, "Excavation and Backfill for Structures." Take special precautions in placing and compacting the backfill to avoid any movement or damage to the units. Bed precast units on foundations of firm and stable material accurately shaped to conform to the bases of the units.

C. Placement of Precast Units. Provide adequate means to lift and place the precast units. Fill lifting holes with mortar or concrete and cure. Precast concrete or mortar plugs may be used.

D. Connections. Make connections to new or existing structures in accordance with the details shown on the plans. Furnish jointing material in accordance with Item 464, "Reinforced Concrete Pipe."

When removing existing headwalls, also remove a length of the existing pipe from the headwall to the joint as shown on the plans or as approved. Re-lay the removed pipe if approved, or furnish and lay a length of new pipe.

467.4. Measurement. SETs of all types will be measured by each barrel of each structure end.

467.5. Payment. The work performed and materials furnished in accordance with this Item and measured as provided under "Measurement" will be paid for at the unit price bid for the various designations of "Safety End Treatment" specified as follows:

- SET (Type I) (Barrel Span) (Wall Height) (Slope, Horizontal:Vertical) (Orientation, Cross or Parallel)
- SET (Type I) (Pipe Diameter or Design) (Slope, Horizontal:Vertical) (Orientation, Cross or Parallel)

- SET (Type II) (Pipe Diameter or Design) (Pipe Material) (Slope, Horizontal:Vertical) (Orientation, Cross or Parallel)

For payment purposes, the wingwall heights of Type I SETs for box culverts will be rounded to the nearest foot.

This price is full compensation for constructing, furnishing, transporting, and installing the end treatments; connecting to existing structure; breaking back, removing and disposing of portions of the existing structure, and replacing portions of the existing structure as required to make connections; excavation and backfill; furnishing concrete, reinforcing steel, corrugated metal pipe or reinforced concrete pipe, and pipe runners; and concrete riprap, nuts, bolts, plates, angles, equipment, labor, tools, and incidentals.

The removal and re-laying of existing pipe or the furnishing of new pipe to replace existing pipe will not be paid for directly but will be considered subsidiary to this Item.

The mitered length of CMP or RCP that is a part of the SET (Type II) will not be paid for directly but will be considered subsidiary to this Item. The limits for payment for pipe will be as shown on the plans and paid for in accordance with the pertinent bid item.

The limits of riprap to be included in the price bid for each SET will be shown on the plans. Any riprap placed beyond the limits shown will be paid in accordance with Item 432, “Riprap.” Riprap between multiple precast SET units will be required as shown on the plans and is included in the price bid for SET.

When precast SETs are provided as an option to mitered RCP, riprap aprons will not be required unless the plans specifically require riprap aprons for precast SET units. The plans will show the limits of the riprap to be included with the precast SET for payment.

MODIFICATIONS TO ITEM Tx479

ADJUSTING MANHOLES AND INLETS

This modification page modifies, amplifies, or amends the technical specifications and plans. In the event of discrepancy, this modification shall take precedence over the plans and the technical specifications.

Paragraph 100.1 Description

This item shall govern for the modifications required to raise sewer manholes, water meter boxes, or valve covers to the proposed sidewalk or driveway grade.

Paragraph 100.2 Construction

All utilities located within proposed sidewalk limits shall be raised and level to the proposed grade and provided with a block-out per the notes and details in the Plans.

Paragraph 100.3 Measurement

Adjusting sewer manholes, water meter boxes, and/or valve covers shall be measured and paid for per each.

ITEM 479

ADJUSTING MANHOLES AND INLETS

479.1. Description. Adjust or cap existing manholes or inlets. Drainage junction boxes will be classified as manholes.

479.2. Materials. Reuse removed manhole and inlet rings, plates, grates, covers, and brick if they are in good condition as determined by the Engineer. Provide additional materials in accordance with Item 465, "Manholes and Inlets," at no cost to the Department. Single- or multiple-piece prefabricated metal extension rings may be used for the adjustment of manholes as approved. Provide concrete that meets Item 421, "Hydraulic Cement Concrete."

479.3. Construction. Perform all work in accordance with Item 465, "Manholes and Inlets." Excavate and backfill in accordance with Item 400, "Excavation and Backfill for Structures." Carefully remove manhole and inlet rings, covers, plates, and grates to be reused. Clean mortar and grease from the contact areas of all reused items. Dispose of unused removed material as directed. Use construction methods described in Sections 479.3.A, "Lowering the Top of a Manhole or Inlet," and 479.3.B, "Raising the Top of a Manhole or Inlet," unless otherwise shown on the plans.

A. Lowering the Top of a Manhole or Inlet. Remove a sufficient depth of brick courses or concrete to permit reconstruction on a batter not exceeding 1 in. horizontal to 2 in. vertical. Where brickwork is present, clean the mortar from the top course of brick. Rebuild the manhole or inlet to the original top dimensions or to the dimensions shown in the plans. Install the manhole or inlet ring and the cover, plate, or grate to conform to the proposed new surface contour.

B. Raising the Top of a Manhole or Inlet. Clean the top surface of brick or concrete. Construct to the proper new elevation using new brick, brick salvaged from other manholes or inlets, prefabricated metal extension rings, concrete rings, or Class A concrete. Install the manhole or inlet ring and the cover, plate, or grate to conform to the proposed new surface contour. Install prefabricated extension rings in accordance with manufacturer's instructions.

C. Capping an Inlet or Manhole. Remove the inlet or manhole to a minimum of 1 ft. below subgrade elevation or as indicated on the plans. Cap as shown on the plans.

479.4. Measurement. Adjusted or capped manholes or inlets will be measured as each manhole or inlet adjusted.

479.5. Payment. The work performed and materials furnished in accordance with this Item and measured as provided under "Measurement" will be paid for at the unit price bid for "Adjusting Manholes," "Adjusting Inlets," or "Adjusting Manholes and Inlets." This price is full compensation for materials, including backfill as required, and for excavation, tools, equipment, labor, and incidentals.

ITEM 500
MOBILIZATION

500.1. Description. Establish and remove offices, plants, and facilities. Move personnel, equipment, and supplies to and from the project or the vicinity of the project site to begin work or complete work on Contract Items.

500.2. Measurement. This Item will be measured by the lump sum as the work progresses.

500.3. Payment. Partial payments of the lump sum bid for mobilization will be as follows. The adjusted Contract amount for construction Items as used below is defined as the total Contract amount less the lump sum for mobilization.

A. Payment will be made upon presentation of a paid invoice for the payment bond, performance bond, and required insurance. The combined payment for bonds and insurance will be no more than 10% of the mobilization lump sum or 1% of the total Contract amount, whichever is less.

B. Payment will be made upon verification of documented expenditures for plant and facility setup. The combined amount for all these facilities will be no more than 10% of the mobilization lump sum or 1% of the total Contract amount, whichever is less.

C. When 1% of the adjusted Contract amount for construction Items is earned, 50% of the mobilization lump sum bid or 5% of the total Contract amount, whichever is less, will be paid. Previous payments under this Item will be deducted from this amount.

D. When 5% of the adjusted Contract amount for construction Items is earned, 75% of the mobilization lump sum bid or 10% of the total Contract amount, whichever is less, will be paid. Previous payments under the Item will be deducted from this amount.

E. When 10% of the adjusted Contract amount for construction Items is earned, 90% of the mobilization lump sum bid or 10% of the total Contract amount, whichever is less, will be paid. Previous payments under this Item will be deducted from this amount.

F. Payment for the remainder of the lump sum bid for “Mobilization” will be made on the next estimate cycle after the initial retainage estimate or at final acceptance for projects without retainage.

ITEM 502

BARRICADES, SIGNS, AND TRAFFIC HANDLING

502.1. Description. Provide, install, move, replace, maintain, clean, and remove upon completion of work all barricades, signs, cones, lights, and other traffic control devices used for traffic handling as indicated on the plans and as directed.

502.2. Construction. Provide traffic control devices that conform to details shown on the plans, the TMUTCD, and the Compliant Work Zone Traffic Control Device List (CWZTCDL) maintained by the Traffic Operations Division.

A. Implementation. Before beginning work, designate in writing a Contractor's Responsible Person (CRP) to be the representative of the Contractor who is responsible for taking or directing corrective measures of installation and maintenance deficiencies as soon as possible. The CRP must be accessible by phone and able to respond to emergencies 24 hours per day.

Follow the traffic control plan (TCP) and install traffic control devices as shown on the plans and as directed. Install traffic control devices straight and plumb. Do not make changes to the location of any device or implement any other changes to the TCP without the approval of the Engineer. Minor adjustments to meet field constructability and visibility are allowed.

Submit Contractor-proposed TCP changes, signed and sealed by a licensed professional engineer, to the Engineer for approval. The Engineer may develop, sign, and seal Contractor-proposed changes. Changes must conform to guidelines established in the TMUTCD using approved products from the CWZTCDL.

Maintain traffic control devices by taking corrective action as soon as possible. Corrective action includes but is not limited to cleaning, replacing, straightening, covering, or removing devices. Maintain the devices such that they are properly positioned, spaced, and legible, and that retroreflective characteristics meet requirements during darkness and rain.

B. Flaggers. Provide a Contractor representative who has been certified as a flagging instructor through courses offered by the Texas Engineering Extension Service, the American Traffic Safety Services Association, the National Safety Council, or other approved organizations. Provide the certificate indicating course completion when requested. This representative is responsible for training and assuring that all flaggers are qualified to perform flagging duties. A qualified flagger must be independently certified by one of the organizations listed above or trained by the Contractor's certified flagging instructor. Provide the Engineer with a current list of qualified flaggers before beginning flagging activities. Use only flaggers on the qualified list.

Flaggers must be courteous and able to effectively communicate with the public. When directing traffic, flaggers must use standard attire, flags, signs, and signals and follow the flagging procedures set forth in the TMUTCD.

C. Removal. Upon completion of work, remove all barricades, signs, cones, lights, and other traffic control devices used for work-zone traffic handling, unless otherwise shown on the plans.

502.3. Measurement. This Item will be measured by the month.

502.4. Payment. The work performed and materials furnished in accordance with this Item and measured as provided under "Measurement" will be paid for at the unit price bid for "Barricades, Signs, and Traffic Handling." This price is full compensation for installation, maintenance, adjustments, replacements, removal, materials, equipment, labor, tools, and incidentals.

When the plans establish pay items for particular work called for in the TCP, that work will be measured and paid for under pertinent Items.

A. Initiation of Payment. Payment for this Item will begin on the first estimate after barricades, signs, and traffic handling devices have been installed in accordance with the TCP and construction has begun. Installation of the project limit advance warning signs alone is not considered the beginning of construction.

B. Paid Months. Monthly payment will be made each succeeding month for this Item provided the barricades, signs, and traffic handling devices have been installed and maintained in accordance with the TCP until the Contract amount has been paid.

If, within the time frame established by the Engineer, the Contractor fails to provide or properly maintain signs and barricades in compliance with the Contract requirements, as determined by the Engineer, the Contractor will be considered in noncompliance with this Item. No payment will be made for the months in question, and the total final payment quantity will be reduced by the number of months the Contractor was in noncompliance.

C. Maximum Total Payment Prior to Acceptance. The total payment for this Item will not exceed 10% of the total Contract amount before final acceptance in accordance with Article 5.8, "Final Acceptance." However, when all work is complete for all project locations, except for work for vegetative establishment and maintenance periods and performance and test periods, the 10% of the total Contract amount may be exceeded. The remaining balance will be paid in accordance with Section 502.4.E, "Balance Due."

D. Total Payment Quantity. The quantity paid under this Item will not exceed the total quantity shown in the plans except as modified by change order and as adjusted by Section 502.4.B, "Paid Months." An overrun of the plans quantity for this Item will not be allowed for approving designs; testing; material shortages; closed construction seasons; curing periods; establishment, performance, test, and maintenance periods; failure to complete the work in the number of months allotted; nor delays caused directly or indirectly by requirements of the contract.

E. Balance Due. If all work is complete and accepted in accordance with Article 5.8, "Final Acceptance," before payment of the amount allowed by this Article, the balance due will be paid on the next estimate after the initial retainage release estimate or final acceptance for projects without retainage.

F. Law Enforcement. Law enforcement required by the Engineer will be paid in accordance with Article 9.5, "Force Account."

MODIFICATIONS TO ITEM Tx506

TEMPORARY EROSION, SEDIMENTATION, AND ENVIRONMENTAL CONTROLS

This modification page modifies, amplifies, or amends the technical specifications and plans. In the event of discrepancy, this modification shall take precedence over the plans and the technical specifications.

Paragraph 506.1 Description

This item includes the installation, maintenance, and removal of all erosion, sedimentation, and environmental control devices as required by the plans and per the direction of the Engineer.

Paragraph 506.5 Measurements

Temporary sediment-control fences will be measured and paid for by linear foot.

ITEM 506

TEMPORARY EROSION, SEDIMENTATION, AND ENVIRONMENTAL CONTROLS

506.1. Description. Install, maintain, and remove erosion, sedimentation, and environmental control devices. Remove accumulated sediment and debris.

506.2. Materials.

A. Rock Filter Dams.

1. **Aggregate.** Furnish aggregate with hardness, durability, cleanliness, and resistance to crumbling, flaking, and eroding acceptable to the Engineer. Provide the following:
   - **Types 1, 2, and 4 Rock Filter Dams.** Use 3 to 6 in. aggregate.
   - **Type 3 Rock Filter Dams.** Use 4 to 8 in. aggregate.
2. **Wire.** Provide minimum 20 gauge galvanized wire for the steel wire mesh and tie wires for Types 2 and 3 rock filter dams. Type 4 dams require:
   - a double-twisted, hexagonal weave with a nominal mesh opening of 2-1/2 in. x 3-1/4 in.;
   - minimum 0.0866 in. steel wire for netting;
   - minimum 0.1063 in. steel wire for selvages and corners; and minimum 0.0866 in. for binding or tie wire.
3. **Sandbag Material.** Furnish sandbags meeting Section 506.2.I, "Sandbags," except that any gradation of aggregate may be used to fill the sandbags.

B. Temporary Pipe Slope Drains. Provide corrugated metal pipe, polyvinyl chloride (PVC) pipe, flexible tubing, watertight connection bands, grommet materials, prefabricated fittings, and flared entrance sections that conform to the plans. Recycled and other materials meeting these requirements are allowed if approved.

Furnish concrete in accordance with Item 432, "Riprap."

C. Baled Hay. Provide hay bales weighing at least 50 lb., composed entirely of vegetable matter, measuring 30 in. or longer, and bound with wire, nylon, or polypropylene string.

D. Temporary Paved Flumes. Furnish asphalt concrete, hydraulic cement concrete, or other comparable non-erodible material that conforms to the plans. Provide rock or rubble with a minimum diameter of 6 in. and a maximum volume of 1/2 cu. ft. for the construction of energy dissipaters.

E. Construction Exits. Provide materials that meet the details shown on the plans and this Section.

1. **Rock Construction Exit.** Provide crushed aggregate for long and short-term construction exits. Furnish aggregates that are clean, hard, durable, and free from adherent coatings such as salt, alkali, dirt, clay, loam, shale, soft, or flaky materials and organic and injurious matter. Use 4- to 8-in. aggregate for Type 1 and 2- to 4-in. aggregate for Type 3.
2. **Timber Construction Exit.** Furnish No. 2 quality or better railroad ties and timbers for long-term construction exits, free of large and loose knots and treated to control rot. Fasten timbers with nuts and bolts or lag bolts, of at least 1/2 in. diameter, unless otherwise shown on the plans or allowed. For short-term exits, provide plywood or pressed wafer board at least 1/2 in. thick.
3. **Foundation Course.** Provide a foundation course consisting of flexible base, bituminous concrete, hydraulic cement concrete, or other materials as shown on the plans or directed.

F. Embankment for Erosion Control. Provide rock, loam, clay, topsoil, or other earth materials that will form a stable embankment to meet the intended use.

G. Pipe. Provide pipe outlet material in accordance with Item 556, "Pipe Underdrains," and details shown on the plans.

H. Construction Perimeter Fence.

1. **Posts.** Provide essentially straight wood or steel posts that are at least 60 in. long. Furnish soft wood posts with a minimum diameter of 3 in. or use 2 x 4 boards. Furnish hardwood posts with a minimum cross-section of 1-1/2 x 1-1/5 in. Furnish T- or L-shaped steel posts with a minimum weight of 1.3 lb. per foot.
2. **Fence.** Provide orange construction fencing as approved by the Engineer.
3. **Fence Wire.** Provide 12-1/2 gauge or larger galvanized smooth or twisted wire. Provide16 gauge or larger tie wire.
4. **Flagging.** Provide brightly-colored flagging that is fade-resistant and at least 3/4 in. wide to provide maximum visibility both day and night.
5. **Staples.** Provide staples with a crown at least 1/2 in. wide and legs at least 1/2 in. long.
6. **Used Materials.** Previously used materials meeting the applicable requirements may be used if accepted by the Engineer.

I. Sandbags. Provide sandbag material of polypropylene, polyethylene, or polyamide woven fabric with a minimum unit weight of 4 oz. per square yard, a Mullen burst-strength exceeding 300 psi, and an ultraviolet stability exceeding 70%.

Use natural coarse sand or manufactured sand meeting the gradation given in Table 1 to fill sandbags. Filled sandbags must be 24 to 30 in. long, 16 to 18 in. wide, and 6 to 8 in. thick.

Table 1
Sand Gradation

Sieve #	Maximum Retained (% by Weight)
4	3%
100	80%
200	95%

J. Temporary Sediment Control Fence. Provide a net-reinforced fence using woven geo-textile fabric. Logos visible to the traveling public will not be allowed.

1. **Fabric.** Provide fabric materials in accordance with DMS-6230, "Temporary Sediment Control Fence Fabric."
2. **Posts.** Provide essentially straight wood or steel posts with a minimum length of 48 in., unless otherwise shown on the plans. Soft wood posts must be at least 3 in. in diameter or nominal 2 x 4 in. Hardwood posts must have a minimum cross-section of 1-1/2 x 1-1/2 in. T- or L-shaped steel posts must have a minimum weight of 1.3 lb. per foot.
3. **Net Reinforcement.** Provide net reinforcement of at least 12-1/2 gauge galvanized welded wire mesh, with a maximum opening size of 2 x 4 in., at least 24 in. wide, unless otherwise shown on the plans.
4. **Staples.** Provide staples with a crown at least 3/4 in. wide and legs 1/2 in. long.
5. **Used Materials.** Use recycled material meeting the applicable requirements if accepted by the Engineer.

506.3. Equipment. Provide a backhoe, front end loader, blade, scraper, bulldozer, or other equipment as required when "Earthwork for Erosion Control" is specified on the plans as a bid item.

506.4. Construction.

A. Contractor Responsibilities. Implement the Department's Storm Water Pollution Prevention Plan (SWP3) for the project site in accordance with the specific or general storm water permit requirements. Develop and implement an SWP3 for project-specific material supply plants within and outside of the Department's right of way in accordance with the specific or general storm water permit requirements. Prevent water pollution from storm water associated with construction activity from entering any surface water or private property on or adjacent to the project site.

B. General.

1. **Phasing.** Implement control measures in the area to be disturbed before beginning construction, or as directed. Limit the disturbance to the area shown on the plans or as directed. If, in the opinion of the Engineer, the Contractor cannot control soil erosion and sedimentation resulting from construction operations, the Engineer will limit the disturbed area to that which the Contractor is able to control. Minimize disturbance to vegetation.
2. **Maintenance.** Immediately correct ineffective control measures. Implement additional controls as directed. Remove excavated material within the time requirements specified in the applicable storm water permit.
3. **Stabilization.** Stabilize disturbed areas where construction activities will be temporarily stopped in accordance with the applicable storm water permit. Establish a uniform vegetative cover. The project will not be accepted until a 70% density of existing adjacent undisturbed areas is obtained, unless otherwise shown on the plans. When shown on the plans, the Engineer may accept the project when adequate controls are in place that will control erosion, sedimentation, and water pollution until sufficient vegetative cover can be established.
4. **Finished Work.** Upon acceptance of vegetative cover, remove and dispose of all temporary control measures, temporary embankments, bridges, matting, falsework, piling, debris, or other obstructions placed during construction that are not a part of the finished work, or as directed.
5. **Restricted Activities.** Do not locate disposal areas, stockpiles, or haul roads in any wetland, water body, or streambed.

   Do not install temporary construction crossings in or across any water body without the prior approval of the appropriate resource agency and the Engineer. Restrict construction operations in any water body to the necessary areas as shown on the plans or applicable permit, or as directed. Use temporary bridges, timber mats, or other structurally sound and non-eroding material for stream crossings.

   Provide protected storage area for paints, chemicals, solvents, and fertilizers at an approved location. Keep paints, chemicals, solvents, and fertilizers off bare ground and provide shelter for stored chemicals.

C. Installation, Maintenance, and Removal Work. Perform work in accordance with the specific or general storm water permit. Install and maintain the integrity of temporary erosion and sedimentation control devices to accumulate silt and debris until earthwork construction and permanent erosion control features are in place or the disturbed area has been adequately stabilized as determined by the Engineer. If a device ceases to function as intended, repair or replace the device or portions thereof as necessary. Remove sediment, debris, and litter. When approved, sediments may be disposed of within embankments, or in the right of way in areas where the material will not contribute to further siltation. Dispose of removed material in accordance with federal, state, and local regulations.

Remove devices upon approval or when directed. Upon removal, finish-grade and dress the area. Stabilize disturbed areas in accordance with the permit, and as shown on the plans or directed. The Contractor retains ownership of stockpiled material and must remove it from the project when new installations or replacements are no longer required.

1. **Rock Filter Dams for Erosion Control.** Remove trees, brush, stumps, and other objectionable material that may interfere with the construction of rock filter dams. Place sandbags as a foundation when required or at the Contractor's option.

   For Types 1, 2, 3, and 5, place the aggregate to the lines, height, and slopes specified, without undue voids. For Types 2 and 3, place the aggregate on the mesh and then fold the mesh at the upstream side over the aggregate and secure it to itself on the downstream side with wire ties, or hog rings, or as directed. Place rock filter dams perpendicular to the flow of the stream or channel unless otherwise directed. Construct filter dams according to the following criteria, unless otherwise shown on the plans:

   a. **Type 1 (Non-reinforced).**

      (1) **Height.** At least 18 in. measured vertically from existing ground to top of filter dam.

      (2) **Top Width.** At least 2 ft.

      (3) **Slopes.** At most 2:1.

   b. **Type 2 (Reinforced).**

      (1) **Height.** At least 18 in. measured vertically from existing ground to top of filter dam.

      (2) **Top Width.** At least 2 ft.

      (3) **Slopes.** At most 2:1.

   c. **Type 3 (Reinforced).**

      (1) **Height.** At least 36 in. measured vertically from existing ground to top of filter dam.

      (2) **Top Width.** At least 2 ft.

      (3) **Slopes.** At most 2:1.

   d. **Type 4 (Sack Gabions).** Unfold sack gabions and smooth out kinks and bends. For vertical filling, connect the sides by lacing in a single loop–double loop pattern on 4- to 5-in. spacing. At one end, pull the end lacing rod until tight, wrap around the end, and twist 4 times. At the filling end, fill with stone, pull the rod tight, cut the wire with approximately 6 in. remaining, and twist wires 4 times.

      For horizontal filling, place sack flat in a filling trough, fill with stone, and connect sides and secure ends as described above.

      Lift and place without damaging the gabion. Shape sack gabions to existing contours.

   e. **Type 5.** Provide rock filter dams as shown on the plans.

2. **Temporary Pipe Slope Drains.** Install pipe with a slope as shown on the plans or as directed. Construct embankment for the drainage system in 8-in. lifts to the required elevations. Hand-tamp the soil around and under the entrance section to the top of the embankment as shown on the plans or as directed. Form the top of the embankment or earth dike over the pipe slope drain at least 1 ft. higher than the top of the inlet pipe at all points. Secure the pipe with hold-downs or hold-down grommets spaced a maximum of 10 ft. on center. Construct the energy dissipators or sediment traps as shown on the plans or as directed. Construct the sediment trap using concrete or rubble riprap in accordance with Item 432, "Riprap," when designated on the plans.

3. **Baled Hay for Erosion and Sedimentation Control.** Install hay bales at locations shown on the plans by embedding in the soil at least 4 in. and, where possible, approximately 1/2 the height of the bale, or as directed. Fill gaps between bales with hay.

4. **Temporary Paved Flumes.** Construct paved flumes as shown on the plans or as directed. Provide excavation and embankment (including compaction of the subgrade) of material to the dimensions shown on the plans, unless otherwise indicated. Install a rock or rubble riprap energy

dissipater, constructed from the materials specified above to a minimum depth of 9 in. at the flume outlet to the limits shown on the plans or as directed.

5. **Construction Exits.** When tracking conditions exist, prevent traffic from crossing or exiting the construction site or moving directly onto a public roadway, alley, sidewalk, parking area, or other right of way areas other than at the location of construction exits. Construct exits for either long or short-term use.

   a. **Long-Term.** Place the exit over a foundation course, if necessary. Grade the foundation course or compacted subgrade to direct runoff from the construction exits to a sediment trap as shown on the plans or as directed. Construct exits with a width of at least 14 ft. for one-way and 20 ft. for two-way traffic for the full width of the exit, or as directed.

      (1) **Type 1.** Construct to a depth of at least 8 in. using crushed aggregate as shown on the plans or as directed.

      (2) **Type 2.** Construct using railroad ties and timbers as shown on the plans or as directed.

   b. **Short-Term.**

      (1) **Type 3.** Construct using crushed aggregate, plywood, or wafer board. This type of exit may be used for daily operations where long-term exits are not practical.

      (2) **Type 4.** Construct as shown on the plans or as directed.

6. **Earthwork for Erosion Control.** Perform excavation and embankment operations to minimize erosion and to remove collected sediments from other erosion control devices.

   a. **Excavation and Embankment for Erosion Control Features.** Place earth dikes, swales, or combinations of both along the low crown of daily lift placement, or as directed, to prevent runoff spillover. Place swales and dikes at other locations as shown on the plans or as directed to prevent runoff spillover or to divert runoff. Construct cuts with the low end blocked with undisturbed earth to prevent erosion of hillsides. Construct sediment traps at drainage structures in conjunction with other erosion control measures as shown on the plans or as directed.

      Where required, create a sediment basin providing 3,600 cu. ft. of storage per acre drained, or equivalent control measures for drainage locations that serve an area with 10 or more disturbed acres at one time, not including offsite areas.

   b. **Excavation of Sediment and Debris.** Remove sediment and debris when accumulation affects the performance of the devices, after a rain, and when directed.

7. **Construction Perimeter Fence.** Construct, align, and locate fencing as shown on the plans or as directed.

   a. **Installation of Posts.** Embed posts 18 in. deep or adequately anchor in rock, with a spacing of 8 to 10 ft.

   b. **Wire Attachment.** Attach the top wire to the posts at least 3 ft. from the ground. Attach the lower wire midway between the ground and the top wire.

   c. **Flag Attachment.** Attach flagging to both wire strands midway between each post. Use flagging at least 18 in. long. Tie flagging to the wire using a square knot.

8. **Sandbags for Erosion Control.** Construct a berm or dam of sandbags that will intercept sediment-laden storm water runoff from disturbed areas, create a retention pond, detain sediment, and release water in sheet flow. Fill each bag with sand so that at least the top 6 in. of the bag is unfilled to allow for proper tying of the open end. Place the sandbags with their tied ends in the same direction. Offset subsequent rows of sandbags 1/2 the length of the preceding row. Place a single layer of sandbags downstream as a secondary debris trap. Place additional sandbags as necessary or as directed for supplementary support to berms or dams of sandbags or earth.

9. **Temporary Sediment-Control Fence.** Provide temporary sediment-control fence near the downstream perimeter of a disturbed area to intercept sediment from sheet flow. Incorporate the fence into erosion-control measures used to control sediment in areas of higher flow. Install the fence as shown on the plans, as specified in this Section, or as directed.

   a. **Installation of Posts.** Embed posts at least 18 in. deep, or adequately anchor, if in rock, with a spacing of 6 to 8 ft. and install on a slight angle toward the run-off source.

   b. **Fabric Anchoring.** Dig trenches along the uphill side of the fence to anchor 6 to 8 in. of fabric. Provide a minimum trench cross-section of 6 x 6 in. Place the fabric against the side of the trench and align approximately 2 in of fabric along the bottom in the upstream direction. Backfill the trench, then hand-tamp.

   c. **Fabric and Net Reinforcement Attachment.** Unless otherwise shown under the plans, attach the reinforcement to wooden posts with staples, or to steel posts with T-clips, in at least 4 places equally spaced. Sewn vertical pockets may be used to attached reinforcement to end posts. Fasten the fabric to the top strand of reinforcement by hog rings or cord every 15 in. or less.

   d. **Fabric and Net Splices.** Locate splices at a fence post with a minimum lap of 6 in. attached in at least 6 places equally spaced, unless otherwise shown under the plans. Do not locate splices in concentrated flow areas.

   Requirements for installation of used temporary sediment-control fence include the following:
   - fabric with minimal or no visible signs of biodegradation (weak fibers),
   - fabric without excessive patching (more than 1 patch every 15 to 20 ft.),
   - posts without bends, and
   - backing without holes.

506.5. Measurement.

A. **Rock Filter Dams.** Installation or removal of rock filter dams will be measured by the foot or by the cubic yard. The measured volume will include sandbags, when used.

   1. **Linear Measurement.** When rock filter dams are measured by the foot, measurement will be along the centerline of the top of the dam.

   2. **Volume Measurement.** When rock filter dams are measured by the cubic yard, measurement will be based on the volume of rock computed by the method of average end areas.

      a. **Installation.** Measurement will be made in final position.

      b. **Removal.** Measurement will be made at the point of removal.

B. **Temporary Pipe Slope Drains.** Temporary pipe slope drains will be measured by the foot.

C. **Baled Hay.** Baled hay will be measured by each bale.

D. **Temporary Paved Flumes.** Temporary paved flumes will be measured by the square yard of surface area. The measured area will include the energy dissipater at the flume outlet.

E. **Construction Exits.** Construction exits will be measured by the square yard of surface area.

F. **Earthwork for Erosion Control.**

   1. **Equipment.** Equipment use will be measured by the actual number of hours the equipment is operated.

   2. **Volume Measurement.**

      a. **In Place.**

(1) **Excavation.** Excavation will be measured by the cubic yard in its original position and the volume computed by the method of average end areas.

(2) **Embankment.** Embankment will be measured by the cubic yard in its final position by the method of average end areas. The volume of embankment will be determined between:

- the original ground surfaces or the surface upon that the embankment is to be constructed for the feature and
- the lines, grades and slopes of the accepted embankment for the feature.

b. **In Vehicles.** Excavation and embankment quantities will be combined and paid for under "Earthwork (Erosion and Sediment Control, In Vehicles)." Excavation will be measured by the cubic yard in vehicles at the point of removal. Embankment will be measured by the cubic yard in vehicles measured at the point of delivery. Shrinkage or swelling factors will not be considered in determining the calculated quantities.

G. **Construction Perimeter Fence.** Construction perimeter fence will be measured by the foot.

H. **Sandbags for Erosion Control.** Sandbags will be measured as each sandbag or by the foot along the top of sandbag berms or dams.

I. **Temporary Sediment-Control Fence.** Temporary sediment-control fence will be measured by the foot.

506.6. Payment. The following will not be paid for directly but are subsidiary to pertinent Items:

- erosion-control measures for Contractor project-specific locations (PSLs) inside and outside the right of way (such as construction and haul roads, field offices, equipment and supply areas, plants, and material sources);
- removal of litter;
- repair to devices and features damaged by Contractor operations;
- added measures and maintenance needed due to negligence, carelessness, lack of maintenance, and failure to install permanent controls;
- removal and reinstallation of devices and features needed for the convenience of the Contractor;
- finish grading and dressing upon removal of the device; and
- minor adjustments including but not limited to plumbing posts, reattaching fabric, minor grading to maintain slopes on an erosion embankment feature, or moving small numbers of sandbags.

The Contractor will be reimbursed in accordance with pertinent Items or Article 9.5, "Force Account," for maintenance, repair, or reinstallation of devices and features when the need for additional control measures cannot be attributed to the above, as determined by the Engineer. Stabilization of disturbed areas will be paid for under pertinent Items.

Furnishing and installing pipe for outfalls associated with sediment traps and ponds will not be paid for directly but is subsidiary to the excavation and embankment under this Item.

A. **Rock Filter Dams.** The work performed and materials furnished in accordance with this Item and measured as provided under "Measurement" will be paid for at the unit price bid as follows:

1. **Installation.** Installation will be paid for as "Rock Filter Dams (Install)" of the type specified. This price is full compensation for furnishing and operating equipment, finish backfill and grading, lacing, proper disposal, labor, materials, tools, and incidentals.

2. **Removal.** Removal will be paid for as "Rock Filter Dams (Remove)." This price is full compensation for furnishing and operating equipment, proper disposal, labor, materials, tools, and incidentals.

When the Engineer directs that the rock filter dam installation or portions thereof be replaced, payment will be made at the unit price bid for "Rock Filter Dams (Remove)" and for "Rock Filter

Dams (Install)" of the type specified. This price is full compensation for furnishing and operating equipment, finish backfill and grading, lacing, proper disposal, labor, materials, tools, and incidentals

B. Temporary Pipe Slope Drains. The work performed and materials furnished in accordance with this Item and measured as provided under "Measurement" will be paid for at the unit price bid for "Temporary Pipe Slope Drains" of the size specified. This price is full compensation for furnishing materials, removal and disposal, furnishing and operating equipment, labor, tools, and incidentals.

Removal of temporary pipe slope drains will not be paid for directly but is subsidiary to the installation Item. When the Engineer directs that the pipe slope drain installation or portions thereof be replaced, payment will be made at the unit price bid for "Temporary Pipe Slope Drains" of the size specified, which is full compensation for the removal and reinstallation of the pipe drain.

Earthwork required for the pipe slope drain installation, including construction of the sediment trap, will be measured and paid for under Section 506.5.F, "Earthwork for Erosion and Sediment Control."

Riprap concrete or stone, when used as an energy dissipater or as a stabilized sediment trap, will be measured and paid for in accordance with Item 432, "Riprap."

C. Baled Hay. The work performed and materials furnished in accordance with this Item and measured as provided under "Measurement" will be paid for at the unit price bid for "Baled Hay." This price is full compensation for furnishing and placing bales, excavating trenches, removal and disposal, equipment, labor, tools, and incidentals.

When the Engineer directs that the baled hay installation (or portions thereof) be replaced, payment will be made at the unit price bid for "Baled Hay," which is full compensation for removal and reinstallation of the baled hay.

D. Temporary Paved Flumes. The work performed and materials furnished in accordance with this Item and measured as provided under "Measurement" will be paid for at the unit price bid for "Temporary Paved Flume (Install)" or "Temporary Paved Flume (Remove)." This price is full compensation for furnishing and placing materials, removal and disposal, equipment, labor, tools, and incidentals.

When the Engineer directs that the paved flume installation or portions thereof be replaced, payment will be made at the unit prices bid for "Temporary Paved Flume (Remove)" and "Temporary Paved Flume (Install)." These prices are full compensation for the removal and replacement of the paved flume and for equipment, labor, tools, and incidentals.

Earthwork required for the paved flume installation, including construction of a sediment trap, will be measured and paid for under Section 506.5.F, "Earthwork for Erosion and Sediment Control."

E. Construction Exits. Contractor-required construction exits from off-right of way locations or on-right of way PSLs will not be paid for directly but are subsidiary to pertinent Items.

The work performed and materials furnished in accordance with this Item and measured as provided under "Measurement" for construction exits needed on right of way access to work areas required by the Department will be paid for at the unit price bid for "Construction Exits (Install)" of the type specified or "Construction Exits (Remove)." This price is full compensation for furnishing and placing materials, excavating, removal and disposal, cleaning vehicles, labor, tools, and incidentals.

When the Engineer directs that a construction exit or portion thereof be removed and replaced, payment will be made at the unit prices bid for "Construction Exit (Remove)" and "Construction Exit (Install)" of the type specified. These prices are full compensation for the removal and replacement of the construction exit and for equipment, labor, tools, and incidentals.

Construction of sediment traps used in conjunction with the construction exit will be measured and paid for under Section 506.5.F, "Earthwork for Erosion and Sediment Control."

F. Earthwork for Erosion and Sediment Control. The work performed and materials furnished in accordance with this Item and measured as provided under "Measurement" will be paid for at the unit price bid for "Excavation (Erosion and Sediment Control, In Place)," "Embankment (Erosion and Sediment Control, In Place)," "Earthwork (Erosion and Sediment Control, In Vehicles)," "Dragline Work (Erosion and Sediment Control)," "Backhoe Work (Erosion and Sediment Control)," "Excavator Work (Erosion and Sediment Control)," "Front End Loader Work (Erosion and Sediment Control)," "Blading Work (Erosion and Sediment Control)," "Scraper Work (Erosion and Sediment Control)," or "Bulldozer Work (Erosion and Sediment Control)."

This price is full compensation for excavation including removal of accumulated sediment in various erosion control installations as directed, hauling, and disposal of material not used elsewhere on the project; excavation for construction of erosion-control features; embankments including furnishing material from approved sources and construction of erosion-control features; sandbags; plywood; stage construction for curb inlets involved in curb-inlet sediment traps; and equipment, labor; tools, and incidentals.

Earthwork needed to remove and obliterate of erosion-control features will not be paid for directly but is subsidiary to pertinent Items unless otherwise shown on the plans.

Sprinkling and rolling required by this Item will not be paid for directly, but will be subsidiary to this Item.

G. Construction Perimeter Fence. The work performed and materials furnished in accordance with this Item and measured as provided under "Measurement" will be paid for at the unit price bid for "Construction Perimeter Fence." This price is full compensation for furnishing and placing the fence; digging, fence posts, wire, and flagging; removal and disposal; and materials, equipment, labor, tools, and incidentals.

Removal of construction perimeter fence will be not be paid for directly but is subsidiary to the installation Item. When the Engineer directs that the perimeter fence installation or portions thereof be removed and replaced, payment will be made at the unit price bid for "Construction Perimeter Fence," which is full compensation for the removal and reinstallation of the construction perimeter fence.

H. Sandbags for Erosion Control. Sandbags will be paid for at the unit price bid for "Sandbags for Erosion Control" (of the height specified when measurement is by the foot). This price is full compensation for materials, placing sandbags, removal and disposal, equipment, labor, tools, and incidentals.

Removal of sandbags will not be paid for directly but is subsidiary to the installation Item. When the Engineer directs that the sandbag installation or portions thereof be replaced, payment will be made at the unit price bid for "Sandbags for Erosion Control," which is full compensation for the reinstallation of the sandbags.

I. Temporary Sediment-Control Fence. The work performed and materials furnished in accordance with this Item and measured as provided under "Measurement" will be paid for at the unit price bid for "Temporary Sediment-Control Fence." This price is full compensation for furnishing and placing the fence; trenching, fence posts, fabric and backfill; removal and disposal; and equipment, labor, tools, and incidentals.

Removal of temporary sediment-control fence will not be paid for directly but is subsidiary to the installation Item. When the Engineer directs that the temporary sedimentation control fence installation or portions thereof be replaced, payment will be made at the unit price bid for "Temporary Sediment-Control Fence," which is full compensation for the removal and reinstallation of the temporary sediment-control fence.

MODIFICATIONS TO ITEM Tx530

INTERSECTIONS, DRIVEWAYS, AND TURNOUTS

This modification page modifies, amplifies, or amends the technical specifications and plans. In the event of discrepancy, this modification shall take precedence over the plans and the technical specifications.

Paragraph 100.1 Description

This item shall govern for the construction of asphalt driveways per the notes and details and at the location and to the limits as shown in the Plans.

Paragraph 100.3 Measurement

Driveway construction or “asphalt driveway repair” shall be measured and paid for per square yard of completed driveway of the material and section specified in the Plans.

ITEM 530
INTERSECTIONS, DRIVEWAYS, AND TURNOUTS

530.1. Description. Construct and pave intersections, driveways, and turnouts. Pave existing intersections, driveways, and turnouts.

Intersections are considered to be areas off the travel lanes and shoulders of the Contract highway on the intersecting highway on the state system. The intersecting on-system highway work will be paid for under this Item only when shown on the plans.

Driveways are defined as private (residential or commercial) and public (county road and city street) access areas off the travel lanes and shoulders.

Turnouts include but are not limited to mailbox and litter barrel widenings.

530.2. Materials. Furnish materials that meet the following:

- Item 247, "Flexible Base"
- Item 260, "Lime Treatment (Road Mixed)"
- Item 263, "Lime Treatment (Plant Mixed)"
- Item 275, "Cement Treatment (Road Mixed)"
- Item 276, "Cement Treatment (Plant Mixed)"
- Item 292, "Asphalt Treatment (Plant Mix)"
- Item 316, "Surface Treatments"
- Item 330, "Limestone Rock Asphalt Pavement"
- Item 334, "Hot Mix–Cold Laid Asphalt Concrete Pavement"
- Item 340, "Dense-Graded Hot Mix Asphalt Concrete Pavement (Method)"
- Item 360, "Concrete Pavement"
- Item 421, "Hydraulic Cement Concrete"
- Item 440, "Reinforcing Steel."

530.3. Construction. Construct and pave intersections, driveways, and turnouts, and pave existing intersections, driveways, and turnouts as shown on the plans or as directed. Place materials in accordance with construction Articles of pertinent Items. Provide uninterrupted access to adjacent property unless otherwise directed. Ensure that abrupt elevation changes in driveway or turnout areas that serve as sidewalks do not exceed 1/4 in. and that the sidewalk area cross slope does not exceed 2%. Ready-mix concrete and hand finishing will be permitted when concrete pavement is specified unless otherwise shown in the plans for intersections.

530.4. Measurement. This Item will be measured by each intersection, driveway, or turnout, or by the square yard of the final pavement surface. When "Intersections, Driveways, and Turnouts" or "Driveways and Turnouts" are bid, measurement will be restricted to the square yard.

530.5. Payment. The work performed and materials furnished in accordance with this Item and measured as provided under "Measurement" will be paid for at the unit price bid for "Intersections," "Driveways," "Turnouts," "Intersections, Driveways, and Turnouts," or "Driveways and Turnouts" of the surface specified (Concrete, Asphaltic Concrete Pavement, or Surface Treatment).

This price is full compensation for furnishing and operating equipment; excavation and embankment; base and pavement materials; and labor, materials, tools, and incidentals. Drainage structures will be measured and paid for in accordance with the pertinent bid Items. Bonus and penalties for quality control and quality assurance (QC/QA) materials will not apply when payment for those materials is made under this Item.

MODIFICATIONS TO ITEM Tx531

SIDEWALKS

This modification page modifies, amplifies, or amends the technical specifications and plans. In the event of discrepancy, this modification shall take precedence over the plans and the technical specifications.

Paragraph 100.1 Description

This item shall govern for the construction of concrete sidewalks, trails, and curb ramps of the type, dimension, section, and to the limits shown in the Plans.

Paragraph 100.2 Construction

Sidewalks shall be constructed per the Plan details. Curb ramps shall be constructed per the TxDOT Standard Details included in the Plans. Only brick pavers with truncated domes will be accepted as detectable warnings for this project.

Paragraph 100.3 Measurement

Sidewalks shall be measured and paid for by the square yard of the type specified. Curb ramps shall be measured and paid for per each of the type specified (including any modifications).

ITEM 531
SIDEWALKS

531.1. Description. Construct hydraulic cement concrete sidewalks.

531.2. Materials. Furnish materials conforming to the following:

- Item 360, "Concrete Pavement"
- Item 420, "Concrete Structures"
- Item 421, "Hydraulic Cement Concrete"
- Item 440, "Reinforcing Steel."

Use Class A concrete or other concrete as specified. Use Grade 8 course aggregate for extruded Class A concrete. Use other grades if approved by the Engineer.

531.3. Construction. Shape and compact subgrade, foundation, or pavement surface to the line, grade, and cross-section shown on the plans. Lightly sprinkle subgrade or foundation material immediately before concrete placement. Hand-tamp and sprinkle foundation when placement is directly on subgrade or foundation materials. Remove and dispose of existing concrete in accordance with Item 104, "Removing Concrete." Provide a clean surface for concrete placement directly on the surface material or pavement.

Mix and place concrete in accordance with the pertinent Items. Hand-finishing is allowed for any method of construction. Finish exposed surfaces to a uniform transverse broom finish surface. Curb ramps must include a detectable warning surface and conform to details shown on the plans. Install joints as shown on the plans. Brush all exposed surfaces to a smooth and uniform surface. Ensure that abrupt changes in sidewalk elevation do not exceed 1/4 inch, sidewalk cross slope does not exceed 2%, curb ramp grade does not exceed 8.3%, and flares adjacent to the ramp do not exceed 10% slope. Where a sidewalk crosses a concrete driveway, ensure that the sidewalk depth and reinforcement are not less than the driveway cross-sectional details shown on the plans.

Provide finished work with a well-compacted mass, a surface free from voids and honeycomb, and the required true-to-line shape and grade. Cure for at least 72 hr. in accordance with Item 420, "Concrete Structures."

A. Conventionally Formed Concrete. Provide sidewalk sections separated by premold or board joint of the thickness shown on the plans in lengths greater than 8 ft. but less than 40 ft., unless otherwise directed. Terminate workday production at an expansion joint.

B. Extruded or Slipformed Concrete. Provide any additional surface finishing immediately after extrusion or slipforming as required on the plans. Construct joints at locations as shown on the plans or as directed.

531.4. Measurement. Sidewalks will be measured by the foot or by the square yard of surface area. Curb ramps will be measured by each unit. The unit will consist of the curb ramp, landing, adjacent flares or side curb, and detectable warning surface as shown on the plans.

531.5. Payment. The work performed and materials furnished in accordance with this Item and measured as provided under "Measurement" will be paid for at the unit price bid for "Concrete Sidewalks" of the width (for foot measurement) and of the depth specified or "Curb Ramps" of the type specified. This price is full compensation for surface preparation of base; materials; removal and disposal of existing concrete; excavation, hauling and disposal of excavated material; drilling and doweling into existing concrete curb, sidewalk, and pavement; repair of adjacent street or pavement structure damaged by these operations; and equipment, labor, materials, tools, and incidentals.

Sidewalks that cross and connect to concrete driveways or turnouts will be measured and paid for in accordance with Item 530, “Intersections, Driveways, and Turnouts.”

MODIFICATIONS TO ITEM Tx644

SMALL ROAD SIGN SUPPORTS AND ASSEMBLIES

This modification page modifies, amplifies, or amends the technical specifications and plans. In the event of discrepancy, this modification shall take precedence over the plans and the technical specifications.

Paragraph 100.1 Description

This item shall govern for the relocation or installation of all signs and associated supports and assemblies as specified in the Plans.

Paragraph 100.3 Measurement

Sign relocation/installation shall be measured and paid for per each sign, support, and assembly relocated or installed new.

ITEM 644

SMALL ROADSIDE SIGN SUPPORTS AND ASSEMBLIES

644.1. Description.

- **Installation.** Furnish, fabricate, and erect small roadside sign assemblies consisting of the signs, sign supports, foundations, and associated mounting hardware.
- **Relocation.** Relocate existing small roadside sign assemblies, and furnish and fabricate materials as required.
- **Removal.** Remove existing small roadside sign assemblies.

644.2. Materials. Furnish all materials unless otherwise shown on the plans. Furnish only new materials. Furnish and fabricate materials in accordance with the following Items and with details shown on the plans:

- Item 421, "Hydraulic Cement Concrete"
- Item 440, "Reinforcing Steel"
- Item 441, "Steel Structures"
- Item 442, "Metal for Structures"
- Item 445, "Galvanizing"
- Item 634, "Plywood Signs"
- Item 636, "Aluminum Signs"
- Item 643, "Sign Identification Decals"
- Item 656, "Foundations for Traffic Control Devices."

Use galvanized steel, stainless steel, dichromate sealed aluminum, or other materials shown on the plans for pipe, bolts, nuts, washers, lock washers, screws, and other sign assembly hardware. When dissimilar metals are used, select or insulate the metals to prevent corrosion.

644.3. Construction. Install foundations in accordance with Item 656, "Foundations for Traffic Control Devices." Plumb sign supports. Do not spring or rake posts to secure proper alignment. Use established safety practices when working near underground or overhead utilities. Consult the appropriate utility company before beginning work.

A. Fabrication. Fabricate sign supports in accordance with Item 441, "Steel Structures." Ensure that all components fit properly.

Verify the length of each post for each sign before fabrication to meet field conditions and sign-mounting heights shown on the plans.

Galvanize fabricated parts in accordance with Item 445, "Galvanizing." Punch or drill any holes in steel parts or members before the parts or members are galvanized. Repair any steel part or member on which the galvanizing has been damaged during assembly, transit, erection, or welding in accordance with Section 445.3.D, "Repairs."

B. Installation. Locate sign supports as shown on the plans, unless directed to shift the sign supports within design guidelines to secure a more desirable location or to avoid conflict with utilities and underground appurtenances. Stake sign-support locations for verification by the Engineer.

Install stub posts of the type, spacing, orientation, and projection shown on the plans. Remove and replace posts damaged during installation at the Contractor's expense.

Connect the upper post sections to the stub post sections as shown on the plans. Torque connection bolts as shown on the plans.

Attach signs to support assemblies in accordance with the plans and pertinent Items.

C. Relocation. Unless otherwise shown on the plans, reuse the existing supports and shorten or lengthen them as required. Obtain approval before lengthening existing supports. Furnish and install new breakaway stub posts in new foundations for relocated signs. Erect the supports on the new breakaway stub posts, and attach the signs to the supports. Attach signs to support assemblies in accordance with the plans and pertinent Items. Remove existing foundations to be abandoned in accordance with Section 644.3.D, "Removal."

D. Removal. Remove existing concrete foundations that are to be abandoned to 2 ft. below finish grade. Backfill the remaining hole with material equal in composition and density to the surrounding area. Replace any surfacing with like material to equivalent condition.

E. Handling and Storage. Handle and store existing signs or portions of signs removed so that they are not damaged. Prevent any damage to the various sign assembly components. Replace any portion of the sign damaged by the Contractor designated for reuse or salvage, including messages removed.

Stockpile all removed sign components that will be reused or that become the property of the Department at designated locations. Accept ownership of unsalvageable materials, and dispose of them in accordance with federal, state, and local regulations.

F. Cleaning. After the sign has been installed, wash the entire sign with a biodegradable cleaning solution acceptable to the sheeting and screen ink manufacturers to remove dirt, grease, oil smears, streaks, finger marks, and other foreign materials.

644.4. Measurement. This Item will be measured as each small roadside assembly installed, removed, or relocated.

644.5. Payment. The work performed and materials furnished in accordance with this Item and measured as provided under "Measurement" will be paid for at the unit price bid for "Install Small Roadside Sign Supports and Assemblies" of the type specified, "Relocate Small Roadside Sign Supports and Assemblies" of the type specified, or "Remove Small Roadside Sign Supports and Assemblies."

A. Installation. This price is full compensation for furnishing, fabricating, galvanizing, and erecting the supports; constructing foundations including concrete (when required); furnishing complete signs including sign connections and all hardware; attaching the signs to the supports; washing and cleaning the signs; and equipment, materials, labor, tools, and incidentals.

B. Relocation. This price is full compensation for furnishing and installing new breakaway stubs and new sign supports (when required); constructing foundations including concrete (when required); removing existing signs and related materials; new signs (when required); modifying existing sign supports; reinstallation of signs and sign assemblies; preparing and cleaning; salvaging; disposal of unsalvageable material; hauling, excavating, backfilling, and surface placement; new hardware; and equipment, materials, labor, tools, and incidentals.

C. Removal. This price is full compensation for removing existing sign assemblies and related materials; salvaging; disposal of unsalvageable material; hauling, excavating, backfilling, and surface placement; and equipment, materials, labor, tools, and incidentals.

MODIFICATIONS TO ITEM Tx666

REFLECTORIZED PAVEMENT MARKINGS

This modification page modifies, amplifies, or amends the technical specifications and plans. In the event of discrepancy, this modification shall take precedence over the plans and the technical specifications.

Paragraph 100.1 Description

This item shall govern for the installation of crosswalk markings per the type, size, color, and locations as depicted in the plans.

Paragraph 100.2 Materials

All pavement markings shall be Type I, 100 mils thickness.

Paragraph 100.3 Measurement

Pavement markings shall be measured and paid for by the linear foot of the type specified.

ITEM 666

REFLECTORIZED PAVEMENT MARKINGS

666.1. Description. Furnish and place reflectorized pavement markings.

666.2. Materials.

A. Type I Marking Materials. Furnish in accordance with DMS-8220, "Hot Applied Thermoplastic."

B. Type II Marking Materials. Furnish in accordance with DMS-8200, "Traffic Paint."

C. Glass Traffic Beads. Furnish drop-on glass beads conforming to DMS-8290, "Glass Traffic Beads."

1. **Type I Markings.** Furnish Type III drop-on glass beads. Furnish Type II or double-drop of Type II and Type III drop-on glass beads where each type bead is applied separately in equal portions (by weight), only when specified in the plans. When furnishing a double-drop system, apply the Type III beads before applying the Type II beads.
2. **Type II Markings.** Furnish Type III drop-on glass beads or other beads specified on the plans.

D. Labeling. Use clearly marked containers that indicate color, mass, material type, manufacturer, and batch number.

666.3. Equipment.

A. General Requirements. Use equipment that:

- is maintained in satisfactory condition,
- meets or exceeds the requirements of the National Board of Fire Underwriters and the RRC for this application,
- uses an automatic bead dispenser attached to the pavement marking equipment, and
- can provide continuous mixing and agitation of the pavement marking material.

Provide a hand-held thermometer capable of measuring the temperature of the marking material when applying Type I material.

B. Material Placement Requirements. Use equipment that can place:

- at least 40,000 ft. of 4-in. solid or broken markings per day at the specified thickness;
- linear markings up to 8 in. wide in a single pass;
- markings other than solid or broken lines;
- a center-line and no-passing barrier-line configuration consisting of 1 broken line with 2 solid lines at the same time to the alignment, spacing, and thickness shown on the plans, for 3-line application;
- white line from both sides;
- lines with clean edges, uniform cross section and thickness, and reasonably square ends;
- skip lines between 10 and 10-1/2 ft., an approximate stripe-to-gap ratio of 1 to 3, and a stripe-gap cycle between 39-1/2 ft. and 40-1/2 ft., automatically;
- beads uniformly and almost instantly on the marking as the marking is being applied;

- beads uniformly during the application of all lines (each line must have an equivalent bead yield rate and embedment); and
- double-drop bead applications using both Type II and Type III beads from separate independent bead applicators, if double-drop bead application is used.

666.4. Construction. Place markings before opening to traffic unless short-term or work zone markings are allowed.

A. General. Obtain approval for the sequence of work and estimated daily production. On roadways already open to traffic, place markings with minimal interference to the operations of that roadway. Use traffic control as shown on the plans or as approved. Protect all markings placed under open-traffic conditions from traffic damage and disfigurement.

Establish guides to mark the lateral location of pavement markings as shown on the plans or as directed, and have guide locations verified. Use material for guides that will not leave a permanent mark on the roadway.

Apply markings on pavement that is completely dry and passes the following tests:

- Type I Marking Application—Place a sample of Type I marking material on a piece of tarpaper placed on the pavement. Allow the material to cool to ambient temperature, and then inspect the underside of the tarpaper in contact with the pavement. Pavement will be considered dry if there is no condensation on the tarpaper.
- Type II Marking Application—Place a 1-sq. ft. piece of clear plastic on the pavement, and weight down the edges. The pavement is considered dry if, when inspected after 15 min., no condensation has occurred on the underside of the plastic.

Apply markings:

- that meet the requirements of Tex-828-B,
- using widths and colors shown on the plans,
- at locations shown on the plans,
- in proper alignment with the guides without deviating from the alignment more than 1 in. per 200 ft. of roadway or more than 2 in. maximum,
- without abrupt deviations,
- free of blisters and with no more than 5% by area of holes or voids,
- with uniform cross section and thickness,
- with clean and reasonably square ends,
- that are reflectorized, and
- using personnel skilled and experienced with installation of pavement markings.

Remove all applied markings that are not in alignment or sequence as stated in the plans or as stated in the specifications at the Contractor's expense in accordance with Item 677, "Eliminating Existing Pavement Markings and Markers," except for measurement and payment.

B. Surface Preparation. Unless otherwise shown on the plans, prepare surfaces in accordance with this section.

1. **Cleaning for New Asphalt Surfaces and Retracing of All Surfaces.** For new asphalt surfaces (less than 3 years old) and retracing of all surfaces, air-blast or broom the pavement surface to remove loose material, unless otherwise shown on the plans. A sealer for Type I markings is not required unless otherwise shown on the plans.

2. **Cleaning for Old Asphalt and Concrete Surfaces (Excludes Retracing).** For old asphalt surfaces (more than 3 years old) and all concrete surfaces, clean in accordance with Item 678, "Pavement Surface Preparation for Markings," to remove curing membrane, dirt, grease, loose and flaking existing construction markings, and other forms of contamination.

3. **Sealer for Type I Markings.** For asphalt surfaces more than 3 years old or for concrete, apply a pavement sealer before placing Type I markings on locations that do not have existing markings, unless otherwise approved. The pavement sealer may be either a Type II marking or an acrylic or epoxy sealer unless otherwise shown on the plans. Follow the manufacturer's directions for application of acrylic or epoxy sealers. When the sealer becomes dirty after placement, clean by washing or in accordance with Section 666.4.B.1, "Cleaning for New Asphalt Surfaces and Retracing of All Surfaces," as directed. Place the sealer in the same configuration and color (unless clear) as the Type I markings unless otherwise shown on the plans.

C. Application. Apply markings during good weather unless otherwise directed. If markings are placed at Contractor option when inclement weather is impending and the markings are damaged by subsequent precipitation, the Contractor is responsible for all costs associated with replacing the markings if required.

1. **Type I Markings.** Place the Type I marking after the sealer cures. Apply within the temperature limits recommended by the material manufacturer. If during a spray application, operations cease for 5 min. or longer, flush the spray head by spraying marking material into a pan or similar container until the material being applied is at the recommended temperature.

   Apply on clean, dry pavements passing the moisture test described in Section 666.4.A, "General," and with a surface temperature above 50ºF when measured in accordance with Tex-829-B.

   Apply Type I markings with a minimum thickness of:
   - 0.100 in. (100 mils) for new markings and retracing water-based markings on surface treatments involving Item 316, "Surface Treatments," or Item 318, "Hot Asphalt-Rubber Surface Treatments,"
   - 0.060 in. (60 mils) for retracing on thermoplastic pavement markings, or
   - 0.090 in. (90 mils) for all other Type I markings.

   The maximum thickness for Type I markings is 0.180 in. (180 mils). Measure thickness for markings in accordance with Tex-854-B using the tape method.

2. **Type II Markings.** Apply on surfaces with a minimum surface temperature of 50°F. Apply at least 20 gal. per mile on concrete and asphalt surfaces and at least 22 gal. per mile on surface treatments for a solid 4-in. line. Adjust application rates proportionally for other widths. When Type II markings are used as a sealer for Type I markings, apply at least 15 gal. per mile using Type II drop-on beads.

3. **Bead Coverage.** For Type I and Type II markings, provide a uniform distribution of beads across the surface of the stripe, with 40 to 60% bead embedment.

D. Performance Period. All markings and replacement markings must meet the requirements of Tex-828-B for at least 30 calendar days after installation. Unless otherwise directed,

remove pavement markings that fail to meet requirements, and replace at the Contractor's expense. Replace failing markings within 30 days of notification.

666.5. Measurement. This Item will be measured by the foot; by each word, symbol, or shape; or by any other unit shown on the plans. Each stripe will be measured separately.

This is a plans quantity measurement Item. The quantity to be paid is the quantity shown in the proposal unless modified by Article 9.2, "Plans Quantity Measurement." Additional measurements or calculations will be made if adjustments of quantities are required.

Acrylic or epoxy sealer, or Type II markings when used as a sealer for Type I markings, will be measured by the foot; by each word, symbol, or shape; or by any other unit shown on the plans.

666.6. Payment. The work performed and materials furnished in accordance with this Item and measured as provided under "Measurement" will be paid for at the unit price bid for "Pavement Sealer" of the size specified or "Reflectorized Pavement Markings" of the type and color specified and the shape, width, size, and thickness (Type I markings only) specified as applicable. This price is full compensation for materials, application of pavement markings, equipment, labor, tools, and incidentals.

Surface preparation of new concrete and asphalt concrete pavements more than 3 years old, where no stripe exists, will be paid for under Item 678, "Pavement Surface Preparation for Markings." Surface preparation of all other asphalt and old concrete pavement, except for sealing, will not be paid for directly but is subsidiary to this Item.

Work-zone pavement markings (Type II, paint and beads) used as a sealer for Type I markings (thermoplastic) will be paid for under Item 662, "Work Zone Pavement Markings."

If the Engineer requires that markings be placed in inclement weather, repair or replacement of markings damaged by the inclement weather will be paid for in addition to the original plans quantity.

SPECIAL
SPECIFICATIONS

SPECIAL SPECIFICATION ITEM LEAN-01

PEDESTRIAN BRIDGE PREFABRICATED H-SECTION TRUSS

Description

This item shall govern for the construction of a fully engineered clear span bridge of steel construction and shall be regarded as minimum standards for design and construction. These specifications are based on products designed and manufactured by the following:

Big R Bridge
P.O. Box 1290, Greely, Colorado 80632
Phone 1-800-234-0734 or 1-970-356-9600
Fax 1-970-356-9621
Email bigrbridge@bigrbridge.com

The following manufacturers are considered approved equals where all specifications herein are satisfied:

Contech Engineered Solutions
9025 Centre Pointe Drive, West Chester, Ohio 45069
Phone 1-800-338-1122

Wheeler Lumber, LLC
9330 James Ave S, Bloomington, Minnesota 55431
Phone 1-800-328-3986 or 1-952-929-7854
Fax 1-952-929-2909

Qualified suppliers must have at least 5 years of experience fabricating these types of structures and be AISC certified Major Bridge Fabricator with Fracture Critical endorsement. All suppliers shall fabricate their product – no brokers are allowed. Contractor shall be required to submit the following as part of the submittal review process prior to construction:

- Product Literature,
- Name and resume of bridge design engineer,
- Copy of AISC certification,
- Detailed drawings, field procedures, calculations, quality control manual, welder's certifications,
- Listing of previous projects including owner, location, size, year of fabrication, and contact person.

The Fabricator shall employ an engineer who is experienced in bridge design to perform all engineering related tasks and design. The engineer shall have a minimum of 5 years experience in bridge design and be a currently licensed civil or structural engineer in the State of Texas and State of Manufacture (if other than Texas).

Applicable Codes and Standards

Bridge shall be designed in accordance with the LRFD Guide Specifications for Design of Pedestrian Bridges, 2nd Edition, by AASHTO.

Other Reference Codes and Standards:

- AISC, Steel Construction Manual, Thirteenth Edition
- AASHTO Standard Specifications for Structural Supports for Highway Signs, Luminaries and Traffic Signals, 5th Edition (AASHTO Signs)
- American Welding Society, Structural Welding Code, D1.1, Latest Edition
- National Design Specification for Wood Construction, ANSI NDS-Latest Edition
- Tropical Timbers of the World, US Forest Products Laboratory

Design

Span - Bridge span shall be 50’’ - 0” horizontal straight line dimension and shall be measured from out to out of the bridge structure.

Width - The bridge width shall be 8’ - 0” as measured from face of structural element to face of structural element.

Bridge System Type - The bridge shall be an “H-Section”, with the floor beams welded into the inside face of the verticals.

- The bridge manufacturer shall determine the distance from the top of deck to the top and bottom truss members based on structural and/or shipping requirements with the following exception: The bottom truss members may be no more than 1’-6” below the top of the deck.
- The top of the top chord shall be a minimum of 4'-6" above the finished deck, adjacent to the chord.
- The bridge shall be designed for an occasional vehicle load of 10,000 pounds with 60% of the load on the rear axle.
- The bridge shall be designed for a uniformly distributed load of 90 pounds per square foot.
- The bridge shall be cambered for dead load of the bridge plus 1% of the overall span length.
- Wind loads shall be as specified by AASHTO Signs, Articles 3.8 and 3.9. Wind Importance Factor shall be 1.15.

Attachments:

- Horizontal safety rails shall be placed on the structure to a minimum height of 4’-6” above the deck surface. The rails shall be so spaced as to prevent a 4" sphere from passing through the rail. Rails may consist of round, square or rectangular hollow steel sections, angles turned with the toes turned to the verticals, or other steel section as required. Rails shall be welded directly to the truss or to spacers which are welded to the truss.
- The bridge shall have a tubular handrail on each side placed at a height of 3’-0”. Handrail shall be mounted to the truss members to supply a clear 1.5" space between the inside of the rail and any truss member. Rail shall be designed for a horizontal load of 50 plf applied in any direction and a non-concurrent load of 200 lbs in any direction applied at the top of the rail. When rails are

designed to allowable stress criteria, the allowable stresses for members and attachments may be increased by one-third.

- Steel toe plates shall consist of ¼”x6” material or channel to be determined by the bridge manufacturer and shall be welded to the inside face of the verticals 2” above the finished height of the deck.

Materials

Structural Steel:

- All members of the truss and deck support system shall be fabricated from square or rectangular hollow structural shapes (HSS), with the exception that floor beams and stringers may be wide flange shapes. All open ends of end posts and floor support beams shall be capped. Drain holes shall be provided for all sections at the low point of the member that may become filled with water.
- Bridge shall be fabricated from corrosion resistant high-strength low-alloy material meeting, A242, A588, or A847.
- Minimum thickness of primary hollow structural shapes shall be 1/4 inch. Rolled shapes shall have a minimum thickness of 1/4 inch.
- All exposed surfaces of unpainted steel shall be blast cleaned in accordance with the Steel Structures Painting Council (SSPC), Surface Preparation Specification No. 7, latest edition, (SSPC-SP7), Brush-Off Blast Cleaning.

The bridge deck shall be ***normal weight reinforced concrete.*** The Bridge Manufacturer shall provide 20 gage (minimum) stay-in-place galvanized metal decking with steel side and end dams. Concrete decks shall be rough broomed transversely. Metal decking shall be secured with fasteners or welds as recommended by the decking manufacturer. Upper and lower layers of longitudinal reinforcement are required. One layer of transverse reinforcement shall be provided when the deck thickness above ribs is less than six inches, and two layers when six inches or greater.

Reinforcing bars shall be placed 2" min clear to top surface, and 1" min clear to all other surfaces or forms. Consideration of composite action from the metal form is prohibited. Concrete and reinforcement in troughs may be considered as contributing the strength of the deck when it can be shown this assumption is valid. Metal forms shall be designed for a construction live load of either 20 psf or a 200 lb point load. Dead load deflection due to wet concrete shall be limited to L/180 and 3/4". Bridge slab concrete shall be 4000 psi normal weight concrete. Aspects of concrete work, including but not limited to material properties, mix designs, plant and field quality control, and rebar placement including support and tying, shall be governed by AASHTO unless specified otherwise. Reinforcing bars, when used, shall conform to AASHTO M31, M42, or M53, grade 60.

Concrete and asphalt surfaces shall be constructed with a cross-slope of 1% unless camber is at least 1% or longitudinal grade is at least 1%.

Fabrication

The fabricators structural design of the bridge(s) shall be by or under the direct supervision of an experienced engineer who is licensed in the state of purchase and in the State of Texas. Design shall be in conformance with the governing specifications contained herein. Design calculations and fabrication plans shall be stamped, signed and dated by the engineer.

The engineer shall use a three dimensional frame analysis for the truss design considering all loads and load combinations specified by AASHTO. All joints capable of transferring moments shall be modeled as fixed or continuous members.

Trusses shall be designed as fully welded except at required field splices. Design shall consider the pony truss top chord stability criteria as defined in AASHTO where applicable. Truss vertical and floor members shall make a rigid frame to resist all lateral loads and stability loads specified by AASHTO.

All welded connections shall be designed for the loads present at the connections. Main member truss splices shall be designed as bolted. Main member connections shall use ASTM A325 bolts to match the material properties of the truss members and shall be designed as slip critical connections. Field installed bolts shall be fully tightened to AASHTO pretensions specified. Flaying surfaces shall not be painted and shall have a Class A contact surfaces. Splice plates, bolt heads, and nuts shall be touch up painted by the erector. Diagonal, vertical and other braces may be spliced with splice plates or through bolts at the option of the fabricator's engineer.

Deflection of the bridge:

- Vertical deflection of the main truss due to unfactored pedestrian load shall not exceed L/360 of the span.
- Horizontal deflection of the main truss due to unfactored lateral wind deflection shall not exceed L/360 of the span.
- Deflection due to occasional vehicle loads shall not be considered.

Bearing devices:

- Elastomeric bearings shall be used at each support of the bridge. Bearings shall be designed in accordance with Method A, preferred, or Method B as defined in the AASHTO bridge specification. Elastomer hardness shall conform to the temperature zones shown in AASHTO. Elastomeric pads shall be designed as steel reinforced where necessary. Cotton duct or fiberglass reinforcement shall not be permitted. Elastomeric Bearings with a Teflon/Stainless Slide Plate may also be used.
- Pads shall be designed for the temperature differences specified and for the actual rotations occurring at the bearing due to dead and pedestrian live loads. If local temperature records show a larger range of temperature than AASHTO, the Engineer/Architect shall so specify.
- Anchor Rod(s) shall be designed at the fixed and expansion end of the bridge for the forces present at that point. Anchor rods conforming to ASTM F1554 Grade 36, 55 or 105 shall be used. J shaped or hooked rods shall not be used if uplift is present under 0.9DL plus any uplift forces. The design shall consider longitudinal, transverse and uplift forces present under the standard AASHTO load cases. If epoxy rods are used the foundation design engineer shall be given the design loads and is responsible for the embedment design and details.

Welding:

- Welding procedures and weld qualification test procedures shall conform to the provisions of AWS D1.1, "Structural Welding Code," latest edition. Filler metal shall be in accordance with the applicable AWS Filler Metal Specification, and shall match the corrosion properties of the base metal.

- Welders shall be qualified for each process and position used while fabricating the bridge. Qualification tests shall be in accordance with AWS D1.1. All weld qualifications and records shall be kept in accordance with the Fabricator's Quality Assurance Manual which has been approved by AISC.
- All welds shall be inspected visually for conformance to size, under cut, profile and finish. Welded splices in main truss members shall be magnetic particle tested in accordance with QC Manual procedures.

Construction

Delivery shall be made via truck to a location nearest the site which is accessible to normal over-the-road equipment. All trucks delivering bridge materials will need to be unloaded at the time of arrival. If the erection Contractor needs special delivery or delivery is restricted he shall notify the fabricator prior to bid date.

The fabricator will provide a written procedure for lifting and splicing the bridge. All methods, equipment and sequence of erection are the responsibility of others.

Measurement and Payment

The prefabricated pedestrian bridge shall be measured and paid for per each bridge designed, fabricated, delivered, and installed.

Submittals

Two copies of fabrication drawings shall be prepared and submitted to the Customer for their review after receipt of the order. Submittal drawings shall be unique drawings, prepared to illustrate the specific portion of the bridge being fabricated. All relative design information such as member size, ASTM material specification, dimension necessary to fabricate and required welding shall be clearly shown on the drawings. Drawings shall have cross referenced details and sheet numbers. All drawings shall be stamped, signed and dated by the Fabricator's Design Engineer who is licensed in accordance with these specifications.

Two copies of the structural calculations for the design of the bridge superstructure shall be prepared and submitted to the Customer for their review after receipt of the order. Calculations shall include complete deck design, analysis and code check of the three dimensional truss with appropriate member connectivity and support conditions, pony truss stability checks, deflection checks, bearing and anchor rod designs and all splices. All drawings shall be stamped, signed and dated by the Fabricator's Design Engineer who is licensed in accordance with these specifications.

One copy of welder certifications and one copy of welding procedures used.

Warranty

The bridge shall carry a warranty against design, material, and workmanship defects for a period of **ten years from the date of delivery**. Naturally durable hardwood decking and hardwood attachments shall carry a one-year warranty against rot, termite damage, or fungal decay. Repair or replacement shall be the exclusive remedy for defects under this warranty.

SPECIAL SPECIFICATION ITEM LEAN-02

LIMESTONE FACED CONCRETE WALL

Description

This item shall govern for the construction of the limestone faced concrete sidewalk wall in the locations shown and as detailed in the Plans.

Construction

Construction of the wall shall be in accordance with TxDOT Standard Specification Item 423 for Retaining Walls.

Measurement and Payment

Construction of limestone faced concrete wall shall be measured and paid for per the linear foot of wall irrespective of the height of the wall. All labor, equipment, and materials including backfill and materials as detailed in the Plans required for construction shall be subsidiary to this item.