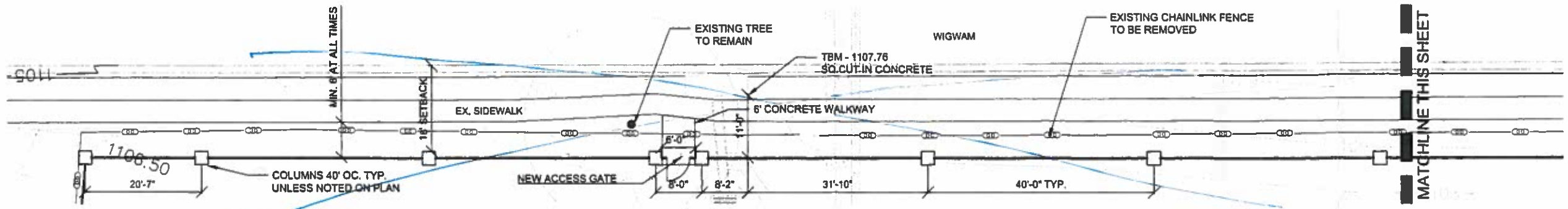

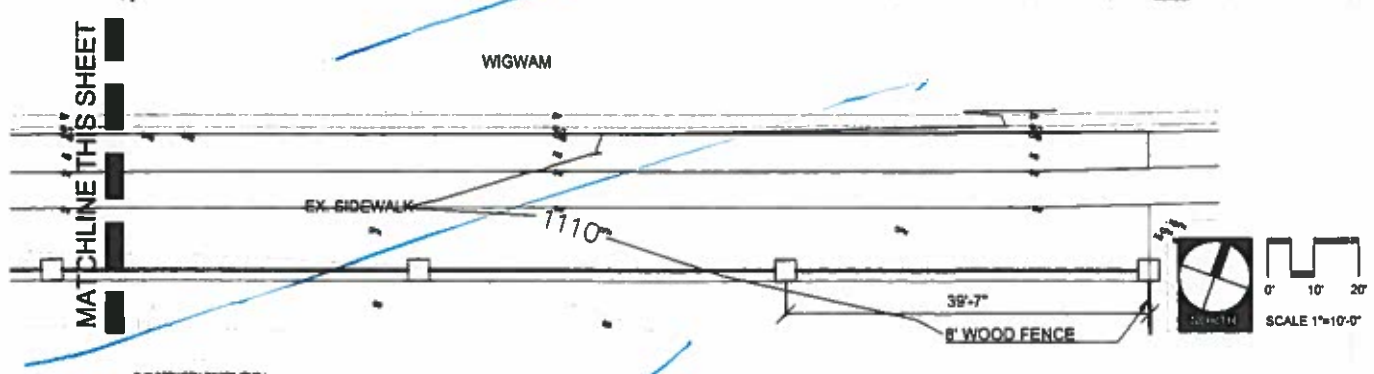

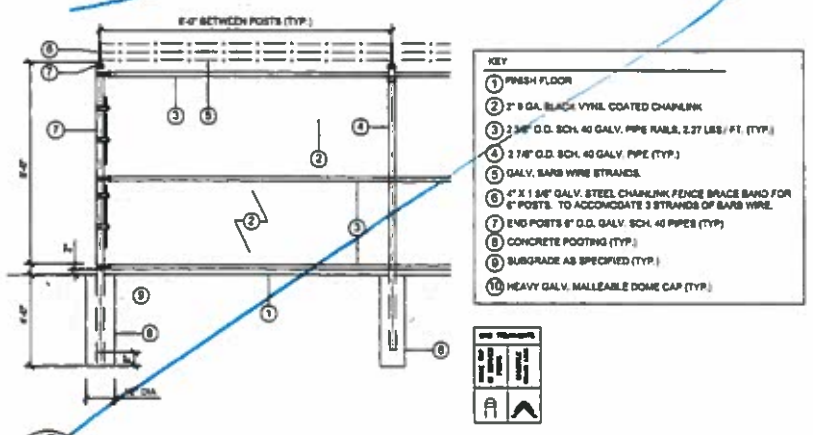

1 L2 **8' CHAINLINK FENCE**

NOT TO SCALE

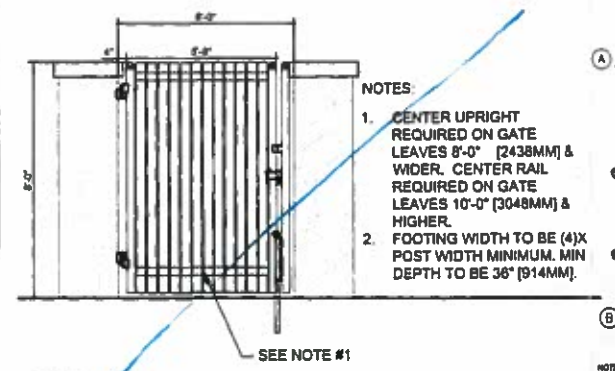

NOTES:

1. CENTER UPRIGHT REQUIRED ON GATE LEAVES 8'-0" [2438MM] & WIDER. CENTER RAIL REQUIRED ON GATE LEAVES 10'-0" [3048MM] & HIGHER.
2. FOOTING WIDTH TO BE (4)X POST WIDTH MINIMUM. MIN DEPTH TO BE 36" [914MM].

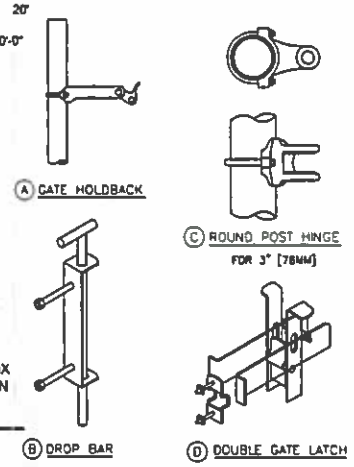

NOTES:
1. METRIC DIMENSIONS ARE NOMINAL EQUIVALENTS TO U.S. DIMENSIONS.

2 L2 **GATE AND GATE ACCESSORIES**

NOT TO SCALE

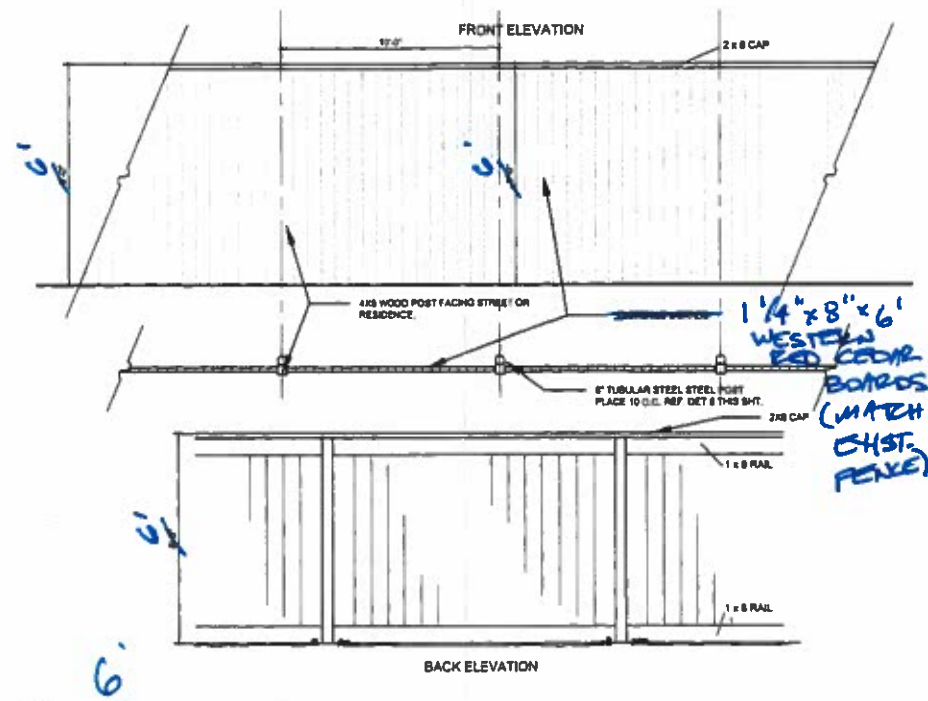

3 L2 **8' WOOD FENCE**

NOT TO SCALE

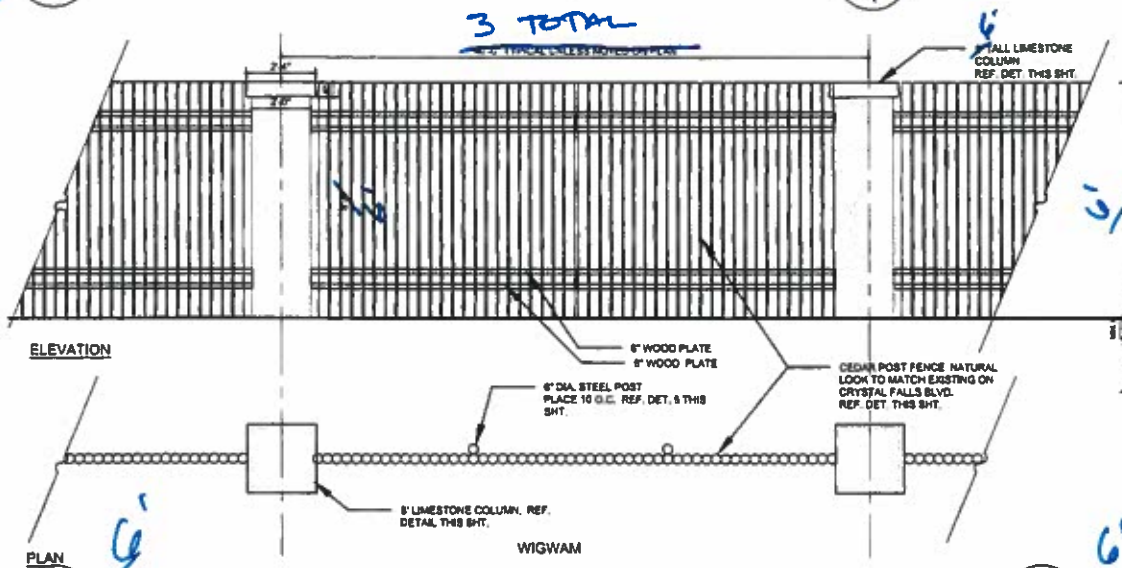

PLAN

4 L2 **8' CEDAR POST FENCE AND LIMESTONE COLUMN**

NOT TO SCALE

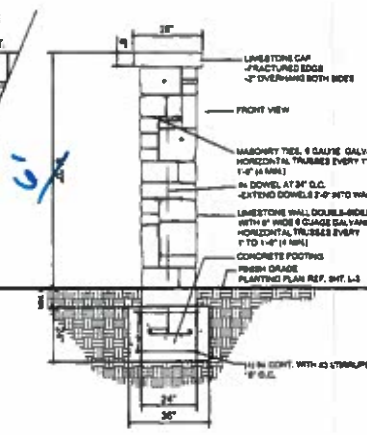

5 L2 **8' LIMESTONE COLUMN**

NOT TO SCALE

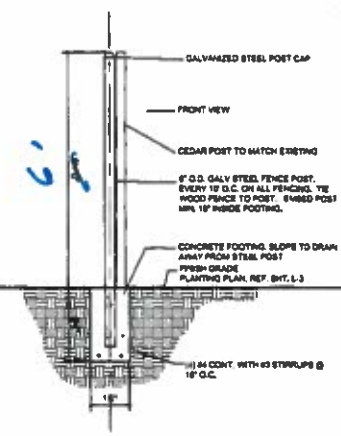

STEEL POST SECTION

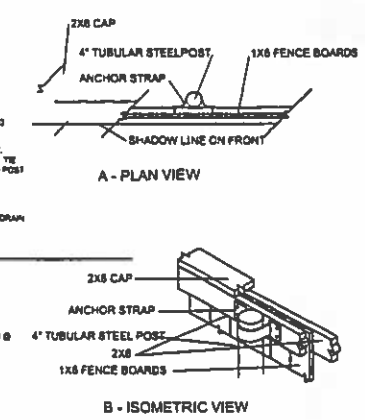

6 L2 **FENCE STEEL POST ON WOOD FENCE**

NOT TO SCALE

811 Know what's below. Call before you dig.

CAUTION - ELECTRICITY PRESENT

THE GENERAL CONTRACTOR AND ALL SUBCONTRACTORS THAT ENTER OR WORK ON THIS PROJECT ARE RESPONSIBLE FOR LOCATING, USING ONE-CALL OR THE ELECTRIC UTILITIES THEMSELVES, ALL OVERHEAD AND UNDERGROUND ELECTRICAL OF ANY NATURE AND FOR SAFEGUARDING ALL PERSONNEL ON THIS PROJECT, INCLUDING ANY OFF-SITE WORK AREAS SHOWN ON THE PLAN, FROM ANY INTERFERENCE WITH THE ELECTRIC LINES OR FROM DAMAGING, DIGGING UP OR UNCOVERING THE ELECTRIC LINES. GETTING A LADDER IN HARMS WAY OR ANY OTHER ACTIVITY OF ANY NATURE THAT COULD HARM ANY INDIVIDUAL IN ANY MANNER. THIS RESPONSIBILITY HEREBY REMOVES BAKER-AICKLEN & ASSOCIATES AND THE OWNER FROM ANY LIABILITY OF ANY NATURE.

BAKER-AICKLEN & ASSOCIATES, INC.
507 WEST LIBERTY AVENUE
ROUND ROCK, TEXAS 78664-5313
(512) 244-3395
CIVIL ENGINEERING FIRM # F-1439
SURVEYING FIRM # LS10021310
TBAE # 1787
ROUND ROCK - CEDAR PARK

DESIGNED: TAB/MPP DRAWN: MPP REVIEWED: TAB

REGISTERED MARCUS A. MONTECT STATE OF TEXAS 1021 12

REVISED

NO. DATE REVISIONS

1916 Hubbard Lane Fence Project

CLIENT OWNER: City of Leander

PROJECT: Leander Water Tower Crystal Falls

SHEET TITLE: HARDSCAPE PLAN AND DETAILS

PROJECT No. 0674-2-012

SHEET No. L2

3 OF 5

E - Fence Details

Attachment