TRAVISSO (CRYSTAL FALLS WEST) - SECTION 1

PHASE 1 - WATER RECLAMATION PLANT
OFFSITE LIFT STATION #16
RECLAIMED WATER PUMP STATION

REVISION #1 04/15/2015

REVISION #2

Revision #7

FOR

TRAVISSO, Ltd.

DECEMBER 2013

TRAVISSO

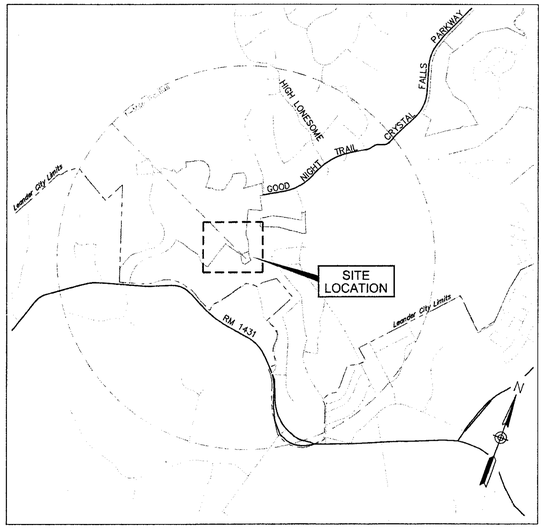

LOCATION MAP

scale: 1"=2000'

OWNER:
Travisso, Ltd.
11200 Lakeline Blvd., Suite 150A
Austin, Texas 78717
Phone: (512) 328-8866
Fax: (512) 328-7988

DEVELOPER:
Travisso, Ltd.
11200 Lakeline Blvd., Suite 150A
Austin, Texas 78717
Phone: (512) 328-8866
Fax: (512) 328-7988

ENGINEER:
Jay Engineering Co., Inc.
P.O Box 1220
Leander, Texas 78764.1220
Phone: (512) 259-3882
Fax: (512) 259-8016

SURVEYOR:
G & R Surveying, LLC
1805 Ouida Drive
Austin, Texas 78728
Phone: (512) 267-7430
Fax: (512) 836-8385

REVISION BLOCK

SHEET	DESCRIPTION	REV.	APPV.	DATE	CITY APPROVAL
G.1.0	Updated Revision Block		FTP	12/13	
C.2.1	Revised WRP Access Road	1	FTP	11/13	
C.2.2	Revised WRP Access Road Added W & WW Services	1	FTP	11/13	
C.6.0	Walkway & Pipe Revisions	1	FTP	10/13	
C.7.0	Walkway, Pipe & Equipment Revisions	1&2	FTP	11/13	
C.8.0	WRP Equipment Revisions	1	FTP	11/13	
S.5.0	Callout Revisions	1	FTP	11/13	
OSLS.1.0	Lift Station Access Rd. Revision	1	FTP	11/13	
OSLS.2.0	Wet Well #2 Relocated	1	FTP	11/13	
OSLS.3.0	Lift Station Revisions	1	FTP	11/13	
RWPS.2.0	Notes Revision WW & XFMR Re-Located	1	FTP	11/13	
C.2.1	Utility Assignments	2	SDK	11/13	
C.10.0	Added Sumps	1	FTP	12/13	
IP.1.0	Revised Grading	1	FTP	12/13	
RWPS.1.0	Revised Grading	1	FTP	12/13	
G.2.0	Re-Located Easmt.	1	FTP	12/13	
G.4.0	Re-Located Easmt.	1	FTP	12/13	
C.2.1	Re-Located Easmt.	3	FTP	12/13	
C.2.3	Re-Located Easmt.	1	FTP	12/13	
C.2.4	Re-Located Easmt.	1	FTP	12/13	
G.1.0	Updated Cover Sheet	1	FTP	12/13	
G.2.0	Re-Labeled PUE	2	FTP	12/13	
OSLS.1.0	Added WW Stubout Profile	2	FTP	12/13	
RWPS.1.0	Revised Grading	2	FTP	12/13	
RWPS.2.0	Updated Electrical Cond.	2	FTP	12/13	
OSLS.3.0	Lift Station Revisions	2	FTP	01/14	
G.1.0	Updated Cover Sheet	3	FTP	01/14	
S.8.0	Dimension Revisions	1	FTP	01/14	

REVISION BLOCK

SHEET	DESCRIPTION	REV.	APPV.	DATE	CITY APPROVAL
SSD.8.0	Add Lift Station Slab Detail	1	FTP	02/14	FTP 6/12/15
C.21.0	Spoils Stockpile	1	FTP	09/14	SDK 12/15/14
G.1.0	Updated Revision Block	4	FTP	09/14	RWG 04/15/15
C.1.1	New Sheet--Interconnect WL	1	FTP	02/15	
LH-1 to LH-6	Hardscape Notes, Plans & Details	1	FTP	02/15	
G.1.0	Updated Revision Block	5	FTP	02/15	

INDEX TO DRAWINGS

G.1.0 ..... COVER SHEET & LOCATION MAP
G.2.0 ..... SITE LAYOUT AND KEY MAP
G.3.0 ..... GENERAL CONSTRUCTION NOTES
G.4.0 ..... EROSION & SEDIMENTATION CONTROL PLAN

C.1.0 ..... SITE GRADING
C.2.0 ..... DRIVEWAY PLAN & PROFILE & BIORETENTION POND
C.2.1-C.2.2 ..... WRP ACCESS ROAD PLAN & PROFILE
C.2.3 ..... WRP ACCESS ROAD SS PLAN & PROFILE
C.2.4 ..... DRAINAGE AREA MAP
C.3.0 ..... SITE PLAN
C.4.0 ..... SITE DETAILS
C.5.0 ..... PROCESS DIAGRAM & HYDRAULIC PROFILE
C.6.0 ..... YARD PIPING PLAN
C.7.0 ..... EQUIPMENT PLAN
C.8.0 ..... TREATMENT MODULE SECTIONS & DETAILS
C.9.0 ..... TREATMENT MODULE SECTIONS & DETAILS
C.10.0 ..... CHEMICAL FEED & BULK STORAGE SYSTEM DETAILS
C.11.0 ..... FILTER DETAILS
C.12.0 ..... FILTER DETAILS
C.13.0 ..... FILTER DETAILS
C.14.0 ..... FILTER DETAILS
C.15.0 ..... OUTFALL PLAN & PROFILE
C.16.0 ..... ON-SITE LIFT STATION #17 - PLAN & PROFILE
C.17.0 ..... LAB/MCC BUILDING & ELEVATIONS
C.18.0 ..... BLOWER SHELTER PLAN & ELEVATIONS
C.19.0 ..... MISC. CONSTRUCTION DETAILS
C.20.0 ..... MISC. CONSTRUCTION DETAILS
C.21.0 _____ SPOILS STOCKPILE

S.1.0 ..... STRUCTURAL NOTES & TYPICAL DETAILS
S.2.0 ..... STRUCTURAL NOTES, ABBREVIATIONS & TYPICAL DETAILS
S.3.0 ..... OVERALL PLANT SITE PLAN
S.4.0 ..... PLANT FOUNDATION PLAN
S.5.0 ..... WALL SECTIONS & DETAILS
S.6.0 ..... MECHANICAL FOUNDATION, ROOF FRAMING PLANS & DETAILS
S.7.0 ..... SECTIONS & DETAILS
S.8.0 _____ LIFT STATION SLAB DETAIL

C.1.1 _____ INTERCONNECT WATERLINE

LH-1 to LH-6 _____ HARDSCAPE NOTES, PLANS & DETAILS

E.1.0 ..... ELECTRICAL SITE PLAN
E.2.0 ..... LIFT STATION #17 ELECTRICAL POWER DIAGRAM
E.3.0 ..... LIFT STATION #17 ELECTRICAL SCHEMATIC & PUMP CONTROL SCHEMATIC
E.4.0 ..... LIFT STATION #17 PUMP CONTROL PANEL, SHELTER & DETAILS
E.5.0 ..... MCC ELECTRICAL ONE-LINE DIAGRAM
E.6.0 ..... MCC ELECTRICAL CONTROL SCHEMATICS
E.7.0 ..... ELECTRICAL POWER, LIGHTING CIRCUITS
E.8.0 ..... EMERGENCY GENERATOR DETAILS
E.9.0 ..... ELECTRICAL LEGEND & KEY SHEET

OSLS.1.0 ..... LIFT STA #16 DRIVE, SITE GRADING & EROSION CONTROL PLAN
OSLS.2.0 ..... LIFT STA #16 SITE & ELEC. SITE PLAN
OSLS.3.0 ..... LIFT STA #16 PLAN & PROFILE
OSLS.4.0 ..... LIFT STA #16 POWER DIAGRAM
OSLS.5.0 ..... LIFT STA #16 ELECTRICAL SCHEMATIC
OSLS.6.0 ..... LIFT STA #16 PUMP CONTROL PANEL & SHELTER

IP.1.0 ..... IRRIGATION POND LAYOUT

RWPS.1.0 ..... RECLAIMED WATER PUMP STATION SITE GRADING & EROSION CONTROL PLAN
RWPS.2.0 ..... RECLAIMED WATER PUMP STATION SITE PLAN & ELECTRICAL

D.1.0 ..... STANDARD DETAILS
D.2.0 ..... STANDARD DETAILS
D.3.0 ..... STANDARD DETAILS
D.4.0 ..... STANDARD DETAILS

LI-1 ..... IRRIGATION BASE MAP
LI-2 ..... IRRIGATION BASE MAP
LI-3 ..... IRRIGATION DETAILS

LH-1 ..... HARDSCAPE NOTES
LH-2 ..... HARDSCAPE LAYOUT PLAN
LH-3 ..... HARDSCAPE DETAILS
LH-4 ..... HARDSCAPE DETAILS
LH-5 ..... HARDSCAPE DETAILS
LH-6 ..... HARDSCAPE DETAILS
LH-3 ..... HARDSCAPE DETAILS

LP-1 ..... PLANTING PLAN
LP-2 ..... PLANTING PLAN
LP-3 ..... PLANTING DETAIL NOTES & SCHEDULE

RELEASE OF THESE PLANS AND/OR SPECIFICATIONS DOES NOT CONSTITUTE A VERIFICATION OF DATA, CALCULATIONS, OR INFORMATION CONTAINED WITHIN THE PLANS AND/OR SPECIFICATIONS. THE ENGINEER OF RECORD IS SOLELY RESPONSIBLE FOR THE COMPLETENESS, ACCURACY, REGULATORY COMPLIANCE, AND ADEQUACY OF THESE PLANS AND/OR SPECIFICATIONS WHETHER OR NOT THE PLANS AND/OR SPECIFICATIONS WERE REVIEWED BY THE CITY ENGINEER(S).

ACCEPTED FOR CONSTRUCTION:

WAYNE S. WATTS, P.E., City Engineer
City of Leander, Texas — DATE: 02/03/14

TOM YANTIS, AICP, Planning Director
City of Leander, Texas — DATE: 2/4

PAT WOMACK,P.E., Director of Public Works
City of Leander, Texas — DATE: 2/3/14

CHIEF JOSHUA DAVIS, Fire Marshal
City of Leander, Texas — DATE: 2/2/14

STEVE BOSAK, Director of Parks & Recreation
City of Leander, Texas — DATE: 2-3-14

PREPARED BY:
JAY ENGINEERING COMPANY, INC

STATE OF TEXAS — FRANK T. PHELAN — 93874 — LICENSED PROFESSIONAL ENGINEER — 1/30/14

Jay Engineering Company, Inc.
P.O. Box 1220
Leander, Texas 78646-1220
Tel. (512) 259-3882 Fax. (512) 259-8016
TEXAS REGISTERED ENGINEERING FIRM F-4780

NO.	DATE	REVISION	APPV.
5	02/15	Updated Cover Sheet	FTP
4	09/14	Updated Cover Sheet	FTP
3	01/14	Updated Cover Sheet	FTP

JAECO JOB NO.: 157-045-20
JAECO JOB NO.: 157-046-20

Sheet G.1.0

Applicant Approved Copy 2-4-14 - 13-PIC P-003

WATER RECLAMATION PLANT, LIFT STATION #16 & RECLAIMED WATER PUMP STATION - CRYSTAL FALLS WEST - SEC. 1_JOB NO._157-045-20

C:\Projects-Lockout-Group\Crystal-Falls-West-Sec1_WRP_LiftSta_PumpSta_044-045-046\Cover-Plans_WRP-Lift-Sta\CFW-Sec1_WRP_Sh-G1.0_Cover_rev-01-28-14.dwg

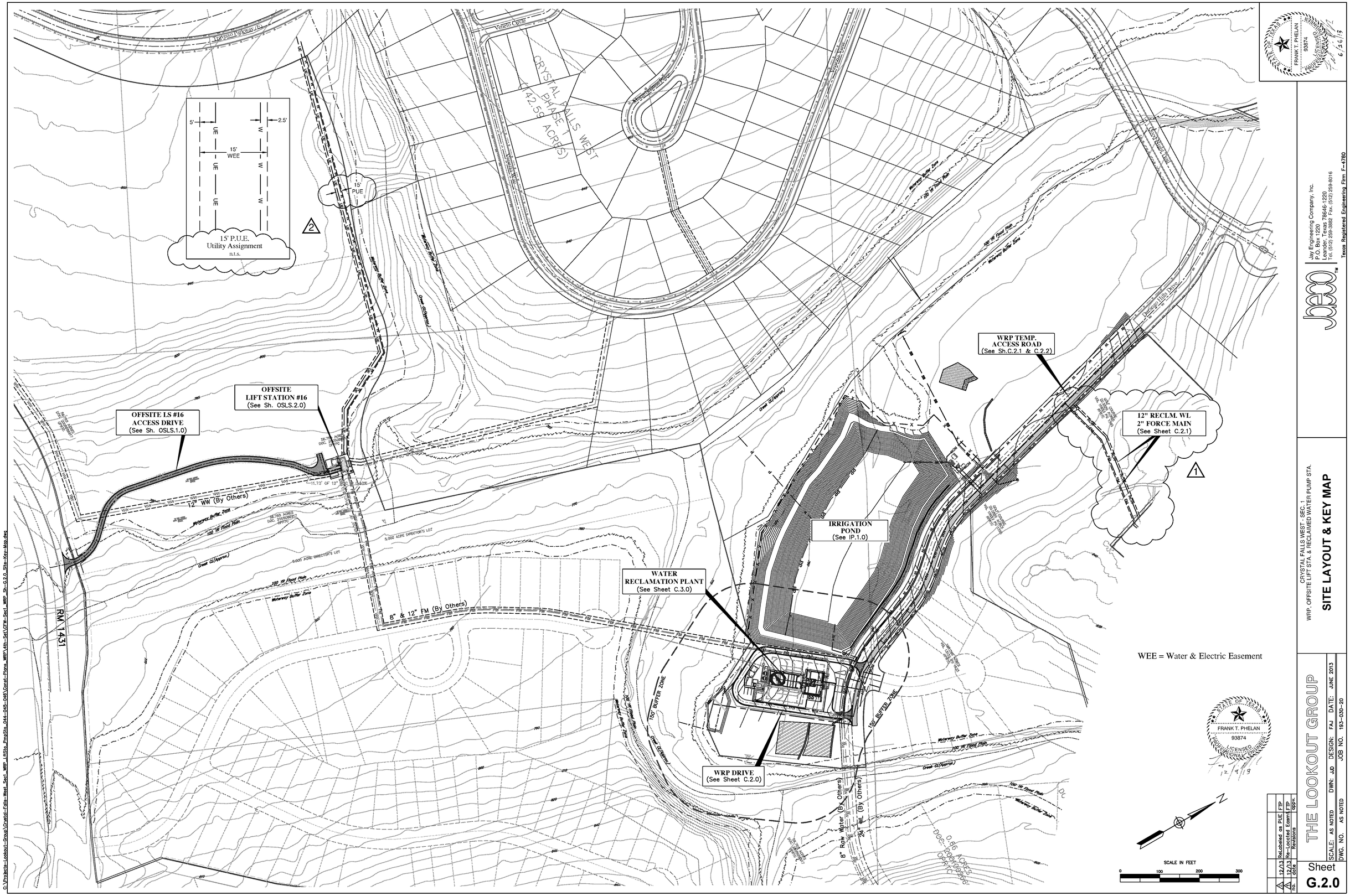

STATE OF TEXAS
FRANK T. PHELAN
93874
LICENSED
PROFESSIONAL ENGINEER
6/26/13

STATE OF TEXAS
FRANK T. PHELAN
93874
LICENSED
PROFESSIONAL ENGINEER
12/9/13

Jay Engineering Company, Inc.
P.O. Box 1220
Lakeway, Texas 78646-1220
Tel: (512) 259-3882 Fax: (512) 259-8016
Texas Registered Engineering Firm F-4780

CRYSTAL FALLS WEST - SEC. 1
WRP, OFFSITE LIFT STA. & RECLAIMED WATER PUMP STA.

SITE LAYOUT & KEY MAP

THE LOOKOUT GROUP

SCALE: AS NOTED DWN: JJD DESIGN: FAJ DATE: JUNE 2013
DWG. NO. AS NOTED JOB NO. 193-030-20

No.	Date	Revisions	Opp.
2	12/13	Relabeled as PUE	FTP
1	12/13	Re-Located Easem't	FTP

Sheet
G.2.0

C:\Projects-Lookout-Group\Crystal-Falls-West_Sec1_WRP_1151to_PrnSto_044-045-046\Const-Plans_WRP\4th-Set\CFW-Sec1_WRP_Sh-G2.0_Site-Key-Map.dwg

STANDARD CONSTRUCTION NOTES

CITY OF LEANDER GENERAL CONSTRUCTION NOTES

1. ALL WATER VALVE COVERS ARE TO BE PAINTED BLUE.
2. WASTE WATER LINES SHALL BE SDR-26 ASTM D2241 PVC WITH A MINIMUM TENSILE STRENGTH OF 7000 PSI AND A CELL CLASS OF 1245-B UNLESS OTHERWISE NOTED.
3. SAW CUT AND MATCH ALL EXISTING PAVEMENT.
4. ALL STRIPING IS TO BE TYPE I THERMOPLASTIC.
5. NO STREET LIGHTS OR SIGNS OF ANY KIND ARE TO BE PLACED WITHIN ANY SIDEWALKS.
6. NO BLASTING IS ALLOWED.
7. SPEED LIMIT SIGNS SHALL INDICATE A SPEED OF NO LESS THAN 30 MPH.
8. MANHOLES SHALL BE COATED WITH RAVEN OR POLYBRID.
9. ALL CONSTRUCTION SHALL BE IN ACCORDANCE WITH THE CITY OF AUSTIN STANDARD SPECIFICATIONS, DRAINAGE CRITERIA MANUAL AND TRANSPORTATION CRITERIA MANUAL.
10. ANY EXISTING UTILITIES, PAVEMENT,CURBS, SIDEWALKS, STRUCTURES, TREES, ETC., THAT ARE DAMAGED OR REMOVED SHALL BE REPAIRED OR REPLACED BY THE CONTRACTOR AT NO COST TO THE OWNER.
11. THE CONTRACTOR SHALL VERIFY ALL DEPTHS AND LOCATIONS OF EXISTING UTILITIES PRIOR TO ANY CONSTRUCTION. ANY DISCREPANCIES WITH CONSTRUCTION PLANS FOUND IN THE FIELD SHALL BE BROUGHT IMMEDIATELY TO THE ATTENTION OF THE ENGINEER.
12. MANHOLES FRAMES, COVERS, VALVES, CLEAN-OUTS, ETC. SHALL BE RAISED TO GRADE PRIOR TO FINAL PAVEMENT CONSTRUCTION.
13. THE CONTRACTOR SHALL GIVE THE CITY OF LEANDER 48 HOURS NOTICE BEFORE BEGINNING EACH PHASE OF CONSTRUCTION. TELEPHONE: 528-2700 or 2764 (ENGINEERING DEPARTMENT).
14. ALL AREAS DISTURBED OR EXPOSED DURING CONSTRUCTION SHALL BE REVEGETATED IN ACCORDANCE WITH PLANS AND SPECIFICATIONS. REVEGETATION SHALL CONSIST OF SODDING OR SEEDING, AT THE CONTRACTOR'S OPTION. HOWEVER, THE TYPE OF REVEGETATION MUST EQUAL OR EXCEED THE TYPE OF VEGETATION PRESENT BEFORE CONSTRUCTION UNLESS OTHERWISE REQUESTED BY THE PROPERTY OWNER.
15. PRIOR TO ANY CONSTRUCTION, THE CONTRACTOR SHALL CONVENE A PRE-CONSTRUCTION CONFERENCE WITH THE CITY OF LEANDER, HIMSELF, THE ENGINEER, OTHER UTILITY COMPANIES, ANY AFFECTED PARTIES AND ANY OTHER ENTITY THE CITY OR THE ENGINEER MAY REQUIRE.
16. THE CONTRACTOR AND THE ENGINEER SHALL KEEP ACCURATE RECORDS OF ALL CONSTRUCTION THAT DEVIATES FROM THE PLANS. THE ENGINEER SHALL FURNISH THE CITY OF LEANDER ACCURATE "RECORD" DRAWINGS FOLLOWING COMPLETION OF ALL CONSTRUCTION. THESE "RECORD" DRAWINGS SHALL MEET WITH THE SATISFACTION OF THE PUBLIC WORKS DEPARTMENT PRIOR TO FINAL ACCEPTANCE.
17. THE CITY OF LEANDER SHALL NOT BE PETITIONED FOR ACCEPTANCE UNTIL ALL NECESSARY EASEMENT DOCUMENTS HAVE BEEN SIGNED AND RECORDED.
18. WHEN CONSTRUCTION IS BEING CARRIED OUT WITHIN EASEMENTS, THE CONTRACTOR SHALL CONFINE HIS WORK TO WITHIN THE PERMANENT AND TEMPORARY EASEMENTS. PRIOR TO ACCEPTANCE, THE CONTRACTOR SHALL BE RESPONSIBLE FOR REMOVING ALL TRASH AND DEBRIS WITHIN THE PERMANENT EASEMENTS. CLEANUP SHALL BE TO THE SATISFACTION OF THE ENGINEER.
19. PRIOR TO ANY CONSTRUCTION, THE CONTRACTOR SHALL APPLY FOR AND SECURE ALL PROPER PERMITS FROM THE APPROPRIATE AUTHORITIES.
20. DENSITY TESTING FOR TRENCH BACKFILL IS TO BE DONE IN 12" LIFTS AT ONE TEST PER 500' INTERVALS OR EACH LINE SEGMENT.
21. A STABILIZED CONSTRUCTION ENTRANCE IS REQUIRED AT ALL POINTS WHERE CONSRUCTION TRAFFIC IS EXITING THE PROJECT ONTO EXISTING PAVEMENT.
22. THE ATTENTION OF THE CONTRACTOR IS DIRECTED TO THE CITY OF LEANDER STANDARD SPECIFICATIONS AND TO THE STATE LAW (VERNON'S ANNOTATED TEXAS STATUTES, ARTICLE 1436(C) AND THE NEED FOR EFFECTIVE PRECAUTIONARY MEASURES WHEN OPERATING EQUIPMENT IN THE VICINITY OF ELECTRICAL LINES. IF THE CONTRACTOR CHOOSES TO USE EQUIPMENT WITH THE POTENTIAL OF COMING WITHIN THE DISTANCE PRESCRIBED BY STATUTE, THE CONTRACTOR IS RESPONSIBLE FOR COORDINATION OF THE WORK WITH THE APPROPRIATE ELECTRIC UTILITY COMPANY.
23. CONTRACTOR SHALL NOTIFY THE LEANDER PUBLIC WORKS DEPARTMENT AT 528-2760 AT LEAST 48 HOURS PRIOR TO THE INSTALLATION OF ANY DRAINAGE FACILITY WITHIN A DRAINAGE EASEMENT OR STREET ROW. THE METHOD OF PLACEMENT AND COMPACTION OF BACKFILL IN THE CITY'S ROW MUST BE APPROVED PRIOR TO THE START OF BACKFILL OPERATIONS.
24. ALL STREET SIGNS SHALL INCLUDE BLOCK NUMBERS.
25. INLET COVERS ARE TO BE SECURED TO INLETS WITH CHAINS..
26. A MINIMUM OF 6" OF TOPSOIL SHALL BE PLACED BETWEEN THE CURB AND THE RIGHT-OF-WAY.
27. AVAILABLE BENCHMARKS (DATUM: 1929 NGVD) THAT MAY BE UTILIZED FOR THE CONSTRUCTION OF THIS PROJECT ARE DESCRIBED AS FOLLOWS:
    (1) BRASS DISK AT SW CORNER OF ELEVATED STORAGE TANK. WEST OF BAGDAD ROAD AND SOUTH OF CRYSTAL FALLS PARKWAY, 18 FEET NORTHEAST OF SOUTHWEST CORNER. ELEVATION=1110.828
    (2) COTTON SPINDLE FOUND IN 10" LIVE OAK LOCATED ON THE WEST SIDE OF BAGDAD ROAD 200' SOUTH OF THE INTERSECTION OF BAGDAD ROAD AND CRYSTAL FALLS PARKWAY. ELEV. 1046.93

STREET AND DRAINAGE NOTES:

1. CONTRACTOR SHALL PROVIDE QUALITY TESTING FOR ALL INFRASTRUCTURES TO BE ACCEPTED AND MAINTAINED BY THE CITY OF LEANDER AFTER COMPLETION. THE CONTRACTOR SHALL NOTIFY THE CITY OF LEANDER ENGINEERING DEPARTMENT AT 528-2769 NO LESS THAN 48 HOURS PRIOR TO ANY TESTING.
2. BACKFILL BEHIND THE CURB SHALL BE COMPACTED TO OBTAIN A MINIMUM OF 95% MAXIMUM DENSITY TO WITHIN 6" OF TOP OF CURB. MATERIAL USED SHALL BE PRIMARILY GRANULAR WITH NO ROCKS LARGER THAN 6" IN THE GREATEST DIMENSION. THE REMAINING 6" SHALL BE CLEAN TOPSOIL FREE FROM ALL CLODS AND SUITABLE FOR SUSTAINING PLANT LIFE.
3. DEPTH OF COVER FOR ALL CROSSINGS UNDER PAVEMENT, INCLUDING GAS, ELECTRIC, TELEPHONE, CABLE TV, ETC., SHALL BE A MINIMUM OF 36" BELOW SUBGRADE.
4. STREET RIGHT-OF-WAY SHALL BE GRADED AT A SLOPE OF 1/4" PER FOOT TOWARD THE CURB UNLESS OTHERWISE INDICATED. HOWEVER, IN NO CASE SHALL THE WIDTH OF RIGHT-OF-WAY AT 1/4" PER FOOT SLOPE BE LESS THAN 10 FEET UNLESS A SPECIFIC REQUEST FOR AN ALTERNATE GRADING SCHEME IS MADE TO AND ACCEPTED BY THE CITY OF LEANDER PUBLIC WORKS DEPARTMENT.
5. BARRICADES BUILT TO THE CITY OF LEANDER STANDARDS SHALL BE ERECTED ON ALL DEAD-END STREETS AND AS NECESSARY DURING CONSTRUCTION TO MAINTAIN JOB AND PUBLIC SAFETY.
6. ALL RCP SHALL BE MINIMUM CLASS III.
7. THE GEOTECHNICAL ENGINEER SHALL INSPECT THE SUBGRADE FOR COMPLIANCE WITH THE DESIGN ASSUMPTIONS MADE DURING PREPARATION OF THE SOILS REPORT. ANY ADJUSTMENTS THAT ARE REQUIRED SHALL BE MADE THROUGH REVISIONS OF THE CONSTRUCTION PLANS.
8. MOISTURE CONDITIONED SUBGRADE: THE SUBGRADE SHOULD BE SCARIFIED TO A DEPTH OF 6 INCHES AND MOISTURE ADJUSTED TO BETWEEN OPTIMUM AND +4 PERCENT OF OPTIMUM MOISTURE CONTENT. THE SUBGRADE SHOULD THEN BE RECOMPACTED TO AT LEAST 95% OF THE MAXIMUM DRY DENSITY AS DETERMINED BY ASTM D698. CARE SHOULD BE TAKEN TO INSURE THAT THE SUBGRADE DOES NOT DRY OUT OR BECOME SATURATED PRIOR TO PAVEMENT CONSTRUCTION.
9. WHENEVER SOIL INVESTIGATION OR EXCAVATION SHOWS MORE THAN 2 FEET OF EXPANSIVE SUBGRADE, WITH P.I. GREATER THAN 25, THE DESIGN PROFESSIONAL IS ADVISED TO ADOPT ONE OF THE FOLLOWING MEASURES:
    1. REPLACE 1.5 FEET OF SUBGRADE WITH A MATERIAL WITH A P.I. OF LESS THAN 15
    2. LIME STABILIZE 8 INCHES OF SUBGRADE.
    3. INCREASE THE BASE THICKNESS BY 50%
10. AT INTERSECTIONS WHICH HAVE VALLEY DRAINAGE, THE CROWNS OF THE INTERSECTING STREETS WILL CULMINATE IN A DISTANCE OF 40 FEET FROM INTERSECTING CURB LINE UNLESS OTHERWISE NOTED. INLETS ON THE INTERSECTING STREET SHALL NOT BE CONSTRUCTED WITHIN 50 FEET OF THE VALLEY GUTTER.
11. AT THE INTERSECTION OF TWO 44' STREETS OR LARGER, THE CROWNS OF THE INTERSECTING STREETS WILL CULMINATE IN A DISTANCE OF 40 FEET FROM INTERSECTING CURB LINE UNLESS OTHERWISE NOTED.
12. PRIOR TO FINAL ACCEPTANCE OF A STREET OUTSIDE OF THE CITY LIMITS, STREET NAME SIGNS CONFORMING TO COUNTY STANDARDS SHALL BE INSTALLED BY THE DEVELOPER.
13. A CURB LAYDOWN IS REQUIRED AT ALL POINTS WHERE THE PROPOSED SIDEWALK INTERSECTS THE CURB.
14. WHEN USING LIME FOR STABILIZATION OF THE SUBGRADE, IT SHALL BE PLACED IN SLURRY FORM. NO DRY LIME IS PERMITTED.

WATER & WASTEWATER CONSTRUCTION NOTES

1. THE CONTRACTOR SHALL CONTACT THE TEXAS EXCAVATION SYSTEM AT 1-800-344-8377 FOR EXISTING UTILITY LOCATIONS 48 HOURS PRIOR TO ANY EXCAVATION. KNOWN EXISTING UTILITIES ARE SHOWN ON THE DRAWINGS. PRIOR TO THE START OF CONSTRUCTION THE CONTRACTOR SHALL VERIFY THE LOCATIONS OF ALL UTILITIES THAT ARE TO BE EXTENDED, TIED TO, CROSSED, OR ALTERED; OR SUBJECT TO DAMAGE/INCONVENIENCE BY THE CONSTRUCTION OPERATIONS.
2. PRESSURE TAPS SHALL BE IN ACCORDANCE WITH CITY OF LEANDER STANDARD SPECIFICATIONS. THE CONTRACTOR SHALL PERFORM ALL EXCAVATION, ETC. AND SHALL FURNISH, INSTALL AND AIR TEST THE SLEEVE AND VALVE. A CITY OF LEANDER INSPECTOR MUST BE PRESENT WHEN THE CONTRACTOR MAKES A TAP, AND/OR ASSOCIATED TESTS. A MINIMUM OF TWO (2) WORKING DAYS NOTICE IS REQUIRED. "SIZE ON SIZE" TAPS WILL NOT BE PERMITTED UNLESS MADE BY THE USE OF AN APPROVED FULL-CIRCLE. GASKETED TAPPING SLEEVE. CONCRETE BLOCKING SHALL BE PLACED BEHIND AND UNDER ALL TAP SLEEVES A MINIMUM OF 24 HOURS PRIOR TO THE BRANCH BEING PLACED IN SERVICE.
3. FIRE HYDRANTS ON MAINS UNDER CONSTRUCTION SHALL BE SECURELY WRAPPED WITH A POLY WRAP BAG AND TAPED INTO PLACE. THE POLY WRAP SHALL BE REMOVED WHEN THE MAINS ARE ACCEPTED AND PLACED INTO SERVICE.
4. THE CONTRACTOR SHALL BE RESPONSIBLE FOR ALL COORDINATION BETWEEN HIMSELF AND OTHER CONTRACTORS AND UTILITIES IN THE VICINITY OF THE PROJECT. THIS INCLUDES GAS, WASTE WATER, ELECTRICAL, TELEPHONE, CABLE TV AND STREET DRAINAGE WORK. ONCE THE CONTRACTOR BECOMES AWARE OF A POSSIBLE CONFLICT, IT IS THE CONTRACTOR'S RESPONSIBILITY TO NOTIFY THE ENGINEER WITH IN TWENTY-FOUR (24) HOURS.
5. THE WATER LINE ALIGNMENT SHOWN ON THE PLANS SHALL BE ACHIEVED BY DEFLECTION, EXCEPT WHERE SPECIFIC FITTINGS ARE CALLED FOR ON THE PLANS. THERE WILL BE NO ADDITIONAL PAYMENTS FOR FITTINGS USED FOR DEFLECTION PURPOSES. UNDER NO CIRCUMSTANCES SHALL THE CONTRACTOR EXCEED THE MAXIMUM DEFLECTION ANGLE RECOMMENDED BY THE PIPE MANUFACTURER.
6. THRUST RESTRAINTS SHALL BE IN ACCORDANCE WITH THE CITY OF LEANDER STANDARD SPECIFICATIONS.
7. WATER LINE TESTING AND STERILIZATION SHALL BE IN ACCORDANCE WITH AWWA STANDARD.
8. MANDREL TESTING WILL BE REQUIRED ON ALL FLEXIBLE WASTE WATER PIPES AS PER TCEQ RULES.
9. ALL NEWLY INSTALLED PIPES AND RELATED PRODUCTS MUST CONFORM TO AMERICAN NATIONAL STANDARDS INSTITUTE/NATIONAL SANITATION FOUNDATION (ANSI/NSF) STANDARD 61 AND MUST BE CERTIFIED BY AN ORGANIZATION ACCREDITED BY ANSI.
10. ALL PLASTIC PIPES FOR USE IN PUBLIC WASTEWATER SYSTEMS MUST HAVE A STANDARD DIMENSION RATIO OF 26 OR LESS.
11. NO PIPE WHICH HAS BEEN USED FOR ANY PURPOSE OTHER THAN THE CONVEYANCE OF DRINKING WATER SHALL BE ACCEPTED OR RELOCATED FOR USE IN ANY PUBLIC DRINKING WATER SUPPLY.
12. DEPTH OF COVER FOR WASTEWATER AND WATER LINES SHALL BE 36" UNDER NATURAL GROUND AND 42" UNDER PAVED AREAS. STORM SEWER LINES SHALL BE 24" UNDER NATURAL GROUND AND 36" UNDER PAVED AREAS.
13. THE HYDROSTATIC LEAKAGE RATE SHALL NOT EXCEED THE AMOUNT ALLOWED OR RECOMMENDED BY AWWA FORMULAS.
14. ALL WATER MAINS, DISTRIBUTION LINES AND SERVICE LINES SHALL BE INSTALLED IN ENCASEMENT PIPE UNDERNEATH STREETS AND OTHER PAVED SURFACES.
15. ALL MECHANICAL RESTRAINTS SHALL BE INSTALLED IN ACCORDANCE WITH THE MANUFACTURERS INSTRUCTIONS.
16. WHERE WATER LINES CROSS WASTE WATER LINES AND THERE IS LESS THAN 9 FEET CLEARANCE BETWEEN LINES, THE WASTER WATER LINE SHALL BE PLACED SO THAT THE WASTE WATER PIPE SECTION IS CENTERED ON THE WATER LINE.
17. PROJECT SPECIFICATIONS TAKE PRECEDENT OVER PLANS AND SPECIAL CONDITIONS GOVERN OVER TECHNICAL SPECIFICATIONS.
18. PIPE MATERIAL FOR WATER MAINS SHALL BE PVC (AWWA C-900 DR14), OR DUCTILE IRON (AWWA C-151 MIN. CLASS 250). WATER SERVICES (2" OR LESS) SHALL BE POLYETHYLENE TUBING (BLACK, 200 PSI, SDR-9)
19. PIPE FOR PRESSURE WASTEWATER MAINS SHALL BE PVC (SDR-21, PRESSURE CLASS 200 FOR 6" AND GREATER DIAMETERS AND SCHEDULED 40 PVC FOR 4" AND LESS DIAMETERS), OR DUCTILE IRON (AWWA C-100 MIN. CLASS 50). ALL PRESSURE SEWER FITTINGS SHALL BE SCHEDULED 80 PVC. PIPE MATERIAL FOR GRAVITY WASTE WATER MAINS SHALL BE PVC (ASTM D2241 OR D3034 MAX. SDR-26), DUCTILE IRON (AWWA C-100 MIN. CLASS 50), OR CONCRETE (ASTM C-76) WITH O-RING JOINT DESIGN.
20. ALL FIRE HYDRANTS SHALL BE DUCTILE IRON PIPE (AWWA C-100 MIN. CLASS 150)
21. ALL IRON PIPE AND FITTINGS SHALL BE WRAPPED WITH MINIMUM 8-MIL POLYETHYLENE.
22. THE CONTRACTOR SHALL CONTACT THE PUBLIC WORKS INSPECTION DEPARTMENT AT 528-2769 AT LEAST 48 HOURS PRIOR TO CONNECTING TO EXISTING WATER LINES.
23. ALL MANHOLES SHALL BE CONCRETE WITH CAST IRON RING AND COVER. ALL MANHOLES LOCATED OUTSIDE OF THE PAVEMENT SHALL HAVE BOLTED COVERS. TAPPING OF FIBERGLASS MANHOLES SHALL NOT BE ALLOWED.
24. THE CONTRACTOR MUST OBTAIN A BULK WATER PERMIT OR PURCHASE AND INSTALL A WATER METER FOR ALL WATER USED DURING CONSTRUCTION. A COPY OF THIS PERMIT MUST BE CARRIED AT ALL TIMES BY ALL WHO USE WATER.
25. LINE FLUSHING OR ANY ACTIVITY USING A LARGE QUANTITY OF WATER MUST BE SCHEDULED WITH THE WATER AND WASTE WATER SUPERINTENDENT AT 528-2780 or 528-2700.
26. THE CONTRACTOR, AT HIS EXPENSE, SHALL PERFORM STERILIZATION OF ALL POTABLE WATER LINES CONSTRUCTED AND SHALL PROVIDE ALL EQUIPMENT (INCLUDING TEST GAUGES), SUPPLIES (INCLUDING CONCENTRATED CHLORINE DISINFECTING MATERIAL), AND NECESSARY LABOR REQUIRED FOR THE STERILIZATION PROCEDURE. THE STERILIZATION PROCEDURE SHALL BE MONITORED BY THE CITY OF LEANDER PERSONNEL. WATER SAMPLES WILL BE COLLECTED BY THE CITY OF LEANDER TO VERIFY EACH TREATED LINE HAS ATTAINED AN INITIAL CHLORINE CONCENTRATION OF 50 PPM. WHERE MEANS OF FLUSHING IS NECESSARY, THE CONTRACTOR, AT HIS EXPENSE, SHALL PROVIDE FLUSHING DEVICES AND REMOVE SAID DEVICES PRIOR TO FINAL ACCEPTANCE BY THE CITY OF LEANDER. ALL FLUSHING MUST BE COORDINATED WITH THE CITY OF LEANDER.
27. SAMPLING TAPS SHALL BE BROUGHT UP TO 3 FEET ABOVE GRADE AND SHALL BE EASILY ACCESSABLE FOR CITY PERSONNEL. AT THE CONTRACTOR'S REQUEST, AND IN HIS PRESENCE, SAMPLES FOR BACTERIOLOGICAL TESTING WILL BE COLLECTED BY THE CITY OF LEANDER NOT LESS THAN 24 HOURS AFTER THE TREATED LINE HAS BEEN FLUSHED OF THE CONCENTRATED CHLORINE SOLUTION AND CHARGED WITH WATER APPROVED BY THE CITY. THE CONTRACTOR SHALL SUPPLY A CHECK OR MONEY ORDER, PAYABLE TO THE TEXAS DEPARTMENT OF HEALTH, TO COVER THE FEE CHARGED FOR TESTING EACH WATER SAMPLE.
28. A QUALIFIED LAB SHALL PERFORM TESTING FOR ALL WASTE WATER PIPE INSTALLED AND PRESSURE PIPE HYDROSTATIC TESTING OF ALL WATER LINES CONSTRUCTED. THE OWNER'S CONTRACTOR SHALL PROVIDE ALL EQUIPMENT (INCLUDING PUMPS AND GAUGES), SUPPLIES AND LABOR NECESSARY TO PERFORM THE TESTS. THE CONTRACTOR SHALL NOTIFY THE CITY OF LEANDER PUBLIC WORKS DEPARTMENT NO LESS THAN 48 HOURS PRIOR TO PERFORMING STERILIZATION, QUALITY TESTING OR PRESSURE TESTING. A CITY OF LEANDER INSPECTOR SHALL BE PRESENT FOR ALL TESTS AND SHALL BE PAID FOR BY THE OWNER/CONTRACTOR. THESE SERVICES ARE PAID FOR AT THE TIME OF CONSTRUCTION PLAN SUBMITTAL.
29. THE CONTRACTOR SHALL NOT OPEN OR CLOSE ANY VALVES UNLESS AUTHORIZED BY THE CITY OF LEANDER.
30. ALL VALVE BOXES AND COVERS SHALL BE CAST IRON.
31. ALL WATER SERVICE , WASTE WATER SERVICE AND VALVE LOCATIONS SHALL BE APPROPRIATELY MARKED AS FOLLOWS:

WATER SERVICE	"W" ON TOP OF CURB
WASTER WATER SERVICE	"S" ON TOP OF CURB
VALVE	"V" ON TOP OF CURB

TOOLS FOR MARKING THE CURBS SHALL BE PROVIDED BY THE CONTRACTOR. OTHER APPROPRIATE MEANS OF MARKING SERVICE AND VALVE LOCATIONS SHALL BE PROVIDED IN AREAS WITHOUT CURBS. SUCH MEANS OF MARKING SHALL BE SPECIFIED BY THE ENGINEER AND ACCEPTED BY THE CITY OF LEANDER.

32. CONTACT THE CITY OF LEANDER CITY ENGINEER AT 528-2764 FOR ASSISTANCE IN OBTAINING EXISTING WATER AND WASTE WATER LOCATIONS.
33. SAND, AS DESCRIBED IN SPECIFICATION ITEM 510 PIPE, SHALL NOT BE USED AS BEDDING FOR WATER AND WASTER WATER LINES. ACCEPTABLE BEDDING MATERIALS ARE PIPE BEDDING STONE, PEA GRAVEL AND IN LIEU OF SAND, A NATURALLY OCCURRING OR MANUFACTURED STONE MATERIAL CONFORMING TO ASTM C33 FOR STONE QUALITY AND MEETING THE FOLLOWING GRADATION SPECIFICATION:

SIEVE SIZE	PERCENT RETAINED BY WEIGHT
1/2"	0
3/8"	0-2
#4	40-85
#10	95-100

34. THE CONTRACTOR IS HEREBY NOTIFIED THAT CONNECTING TO, SHUTTING DOWN, OR TERMINATING EXISTING UTILITY LINES MAY HAVE TO OCCUR AT OFF-PEAK HOURS. SUCH HOURS ARE USUALLY OUTSIDE NORMAL WORKING HOURS AND POSSIBLY BETWEEN 12 AM AND 6 AM.
35. ALL WASTE WATER CONSTRUCTION SHALL BE IN ACCORDANCE WITH THE TEXAS COUNCIL ON ENVIRONMENTAL QUALITY (TCEQ) REGULATIONS, 31 TAC CHAPTER 313 AND 31 TAC CHAPTER 317, AS APPLICABLE. WHENEVER TCEQ AND CITY OF LEANDER SPECIFICATIONS CONFLICT, THE MORE STRINGENT SHALL APPLY.
36. NO CURVILINEAR WASTEWATER DESIGN/LAYOUT IS PERMITTED.
37. ENGINEER SHALL SPECIFY SEQUENCE OF FLUSHING AND LOCATION OF BAC-T TESTING.

TRENCH SAFETY NOTES:

1. IN ACCORDANCE WITH THE LAWS OF THE STATE OF TEXAS AND THE U.S. OCCUPATIONAL SAFETY AND HEALTH ADMINISTRATION REGULATIONS, ALL TRENCHES OVER 5 FEET IN DEPTH IN EITHER HARD AND COMPACT OR SOFT AND UNSTABLE SOIL SHALL BE SLOPED, SHEETED, BRACED OR OTHERWISE SUPPORTED. FURTHERMORE, ALL TRENCHES LESS THAN 5 FEET IN DEPTH SHALL ALSO BE EFFECTIVELY PROTECTED WHEN HAZARDOUS GROUND MOVEMENT MAY BE EXPECTED. TRENCH SAFETY SYSTEMS TO BE UTILIZED FOR THIS PROJECT ARE DESCRIBED IN ITEM 509S "TRENCH SAFETY SYSTEMS" OF THE CITY OF AUSTIN STANDARD SPECIFICATIONS.
2. IN ACCORDANCE WITH THE U.S. OCCUPATIONAL SAFETY AND HEALTH ADMINISTRATION REGULATIONS, WHEN EMPLOYEES ARE REQUIRED TO BE IN TRENCHES 4 FEET DEEP OR MORE, ADEQUATE MEANS OF EXIT, SUCH AS A LADDER OR STEPS MUST BE PROVIDED AND LOCATED SO AS TO REQUIRE NO MORE THAN 25 FEET OF LATERAL TRAVEL.

TRAFFIC MARKING NOTES:

1. ANY METHODS, STREET MARKINGS AND SIGNAGE NECESSARY FOR WARNING MOTORISTS, WARNING PEDESTRIANS OR DIVERTING TAFFIC DURING CONSTRUCTION SHALL CONFORM TO THE TEXAS MANUAL OF UNIFORM TRAFFIC CONTROL DEVICES FOR STREETS AND HIGHWAYS, LATEST EDITION.
2. ALL PAVEMENT MARKINGS, MARKERS, PAINT, TRAFFIC BUTTONS, TRAFFIC CONTROLS AND SIGNS SHALL BE INSTALLED IN ACCORDANCE WITH THE TEXAS DEPARTMENT OF TRANSPORTATION STANDARD SPECIFICATIONS FOR CONSTRUCTION OF HIGHWAYS. STREETS AND BRIDGES AND, THE TEXAS MANUAL OF UNIFORM TRAFFIC CONTROL DEVICES FOR STREETS AND HIGHWAYS, LATEST EDITIONS.
3. ALL TRAFFIC CONTROLS TO BE PER TXMUTCD, LATEST EDITION.

EASEMENT NOTES:

1. EASEMENTS WILL BE PROVIDED PRIOR TO PRE-CONSTRUCTION MEETING.

TEXAS COMMISSION ON ENVIRONMENTAL QUALITY WATER DISTRIBUTION SYSTEM GENERAL CONSTRUCTION NOTES

1. THIS WATER DISTRIBUTION SYSTEM MUST BE CONSTRUCTED IN ACCORDANCE WITH THE CURRENT TEXAS COMMISSION ON ENVIRONMENTAL QUALITY (TCEQ) RULES AND REGULATIONS FOR PUBLIC WATER SYSTEMS 30 TEXAS ADMINISTRATIVE CODE (TAC) CHAPTER 290 SUBCHAPTER D.
2. PRIOR TO COMMENCEMENT OF CONSTRUCTION, THE OWNER OF THE SYSTEM OR HIS REPRESENTATIVE MUST NOTIFY THE APPROPRIATE TCEQ REGIONAL OFFICE IN WRITING OF THE DATE ON WHICH CONSTRUCTION WILL BEGIN.
3. ALL NEWLY INSTALLED PIPES AND RELATED PRODUCTS MUST CONFORM TO AMERICAN NATIONAL STANDARDS INSTITUTE/NATIONAL SANITATION FOUNDATION (ANSI/NSF) STANDARD 61 AND MUST BE CERTIFIED BY AN ORGANIZATION ACCREDITED BY ANSI.
4. PLASTIC PIPE FOR USE IN PUBLIC WATER SYSTEMS MUST BEAR THE NATIONAL SANITATION FOUNDATION SEAL OF APPROVAL (NSF-PW) AND HAVE AN ASTM DESIGN PRESSURE RATING OF AT LEAST 150 PSI OR A STANDARD DIMENSION RATIO OF 26 OR LESS.
5. NO PIPE WHICH HAS BEEN USED FOR ANY PURPOSE OTHER THAN THE CONVEYANCE OF DRINKING WATER SHALL BE ACCEPTED OR RELOCATED FOR USE IN ANY PUBLIC DRINKING WATER SUPPLY.
6. WATER TRANSMISSION AND DISTRIBUTION LINES MUST BE INSTALLED IN ACCORDANCE WITH THE MANUFACTURER'S INSTRUCTIONS. HOWEVER, THE TOP OF THE WATER LINE MUST BE LOCATED BELOW THE FROST LINE AND IN NO CASE SHALL THE TOP OF THE WATER LINE BE LESS THAN 24 INCHES BELOW GROUND SURFACE.
7. THE HYDROSTATIC LEAKAGE RATE SHALL NOT EXCEED THE AMOUNT ALLOWED OR RECOMMENDED BY THE MOST CURRENT AWWA FORMULAS FOR PVC PIPE, CAST IRON AND DUCTILE IRON PIPE.
8. THE CONTRACTOR SHALL INSTALL APPROPRIATE AIR RELEASE DEVICES IN THE DISTRIBUTION SYSTEM AT ALL POINTS WHERE TOPOGRAPHY OR OTHER FACTORS MAY CREATE AIR LOCKS IN THE LINES. ALL VENT OPENINGS TO THE ATMOSPHERE SHALL BE COVERED WITH 16-MESH OR FINER, CORROSION RESISTANT SCREENING MATERIAL OR AN ACCEPTABLE EQUIVALENT.
9. THE CONTRACTOR SHALL MAINTAIN A MINIMUM SEPARATION DISTANCE IN ALL DIRECTIONS OF NINE FEET BETWEEN THE PROPOSED WATERLINE AND WASTEWATER COLLECTION FACILITIES INCLUDING MANHOLES AND SEPTIC TANK DRAINFIELDS. IF THIS DISTANCE CANNOT BE MAINTAINED, THE CONTRACTOR MUST IMMEDIATELY NOTIFY THE PROJECT ENGINEER FOR FURTHER DIRECTION. SEPARATION DISTANCES, INSTALLATION METHODS, AND MATERIALS UTILIZED MUST MEET '290.44(E) OF THE CURRENT RULES.
10. THE CONTRACTOR SHALL DISINFECT THE NEW WATER MAINS IN ACCORDANCE WITH AWWA STANDARD C651 AND THEN FLUSH AND SAMPLE THE LINES BEFORE BEING PLACED INTO SERVICE. SAMPLES SHALL BE COLLECTED FOR MICROBIOLOGICAL ANALYSIS TO CHECK THE EFFECTIVENESS OF THE DISINFECTION PROCEDURE WHICH SHALL BE REPEATED IF CONTAMINATION PERSISTS. A MINIMUM OF ONE SAMPLE FOR EACH 1,000 FEET OF COMPLETED WATER LINE WILL BE REQUIRED OR AT THE NEXT AVAILABLE SAMPLING POINT BEYOND 1,000 FEET AS DESIGNATED BY THE DESIGN ENGINEER.
11. THE CONTRACTOR SHALL NOT PLACE THE PIPE IN WATER OR WHERE IT CAN BE FLOODED WITH WATER OR SEWAGE DURING ITS STORAGE OR INSTALLATION.
12. 30 TAC 290.44(b) PROHIBITS PIPE AND PIPE FITTINGS WHICH CONTAIN MORE THAN 8.0 PERCENT LEAD OR SOLDERS AND FLUX THAT CONATINS MORE THAN 0.2 PERCENT LEAD. PLEASE BE AWARE THAT BEGINNING JANUARY 2014, CHANGES TO THE SAFE DRINKING WATER ACT WILL FURTHER REDUCE THE MAXIMUM ALLOWABLE LEAD CONTENT OF PIPES, PIPE FITTINGS, PLUMBING FITTINGS, AND FIXTURES TO 0.25 PERCENT. PROJECTS CONSTRUCTED AFTER DECEMBER 2013 MUST COMPLY WITH THE MAXIMUM ALLOWABLE LEAD CONTENT OF 0.25 PERCENT. ACCEPTABLE PRODUCT MARKING DEMONSTRATING THIRD PARTY CERTIFICATION WITH THE REQUIREMENTS INCLUDE NSF®-61-G OR NSF®-61 AND NSF®-372.

DEVELOPER INFORMATION:
Lookout Partners, L.P.
2370 Rice Blvd., Suite 200
Houston, Texas 77005
Phone: (713) 524-5263
Fax: (713) 524-2807

OWNER'S REPRESENTATIVE RESPONSIBLE FOR PLAN ALTERATIONS:
Jay Engineering Co., Inc.
P.O. Box 1220
Leander, Texas 78646-1220
Phone: (512) 259-3882
Fax: (512) 259-8016

PERSON OR FIRM RESPONSIBLE FOR EROSION/SEDIMENTATION CONTROL MAINTENANCE:
CONTRACTOR

PERSON OR FIRM RESPONSIBLE FOR TREE/NATURAL AREA PROTECTION MAINTENANCE:
CONTRACTOR

SEQUENCE OF CONSTRUCTION

1. Install erosion, sedimentation and tree protection measures.
2. Conduct pre-construction conference with the City of Leander and LCRA
3. Install temporary diversion berms.
4. Clear construction areas, excavate and fill where required.
5. Install offsite lift station, water reclamation plant & irrigation pond.
6. Install wastewater, water, & storm sewer improvements.
7. Install electric/gas/telecommunications conduit with street crossings.
8. Install first base course.
9. Install curb and gutter and final base course.
10. Install all meter settings and adjust all manholes and boxes.
11. Pave streets.
12. Final adjust settings and clean work areas.
13. Set electric/gas/telecommunications services and clean work areas.
14. Install Water Quality BMP's.
15. Perform final cleanup and revegatation/restoration.
16. Remove temporary erosion controls upon acceptance of restored areas.
17. It is the responsibility of the property owner to obtain the necessary permits and install appropriate temporary erosion and sedimentation controls during any construction activity on individual lots.

FRANK T. PHELAN 93874 LICENSED PROFESSIONAL ENGINEER 6/26/13

Jay Engineering Company, Inc.
P.O. Box 1220
Leander, Texas 78646-1220
Tel. (512) 259-3882 Fax. (512) 259-8016
Texas Registered Engineering Firm F-4780

CRYSTAL FALLS WEST - SEC. 1
WRP, OFFSITE LIFT STA. & RECLAIMED WATER PUMP STA.

CONSTRUCTION NOTES

THE LOOKOUT GROUP

SCALE: AS NOTED | DWN: JJD | DESIGN: FAJ | DATE: JUNE 2013
DWG. NO. AS NOTED | JOB NO. 193-030-20

no.	date	Revisions	appv.

Sheet
G.3.0

C:\Projects-Lookout-Group\Crystal-Falls-West_Sec1_WRP_LftSta_PmpSta_044-045-046\Const-Plans_WRP\4th-Set\CFW-Sec1_WRP_Sh-G3.0_Const-Notes.dwg

STANDARD ENVIRONMENTAL NOTES

N.T.S.

1. TEMPORARY EROSION/SEDIMENTATION CONTROL AND TREE/NATURAL AREA PROTECTION MEASURES:

   a. THE CONTRACTOR SHALL INSTALL EROSION/SEDIMENTATION CONTROLS AND TREE/NATURAL AREA PROTECTIVE FENCING PRIOR TO ANY SITE PREPARATION WORK (CLEARING, GRUBBING, GRADING OR EXCAVATION).

   b. THE PLACEMENT OF EROSION/SEDIMENTATION CONTROLS SHALL BE IN ACCORDANCE WITH THE ENVIRONMENTAL CRITERIA MANUAL AND THE APPROVED EROSION AND SEDIMENTATION CONTROL PLAN.

   c. THE PLACEMENT OF TREE/NATURAL AREA PROTECTIVE FENCING SHALL BE IN ACCORDANCE WITH CITY OF AUSTIN STANDARD NOTES FOR TREE AND NATURAL AREA PROTECTION AND THE APPROVED GRADING/TREE AND NATURAL AREA PLAN.

   d. AS REQUIRED BY CITY ORDINANCE, A PRE-CONSTRUCTION CONFERENCE SHALL BE HELD SUBSEQUENT TO INSTALLATION OF THE INITIAL PHASE OF THE EROSION AND SEDIMENTATION CONTROLS AND PRIOR TO BEGINNING CONSTRUCTION. THIS CONFERENCE SHOULD TAKE PLACE ON THE SITE TO DEMONSTRATE COMPLIANCE WITH THE ENVIRONMENTAL CRITERIA MANUAL AND THE APPROVED PLANS, AND TO PRESENT A PLAN INCLUDING FUTURE EROSION AND SEDIMENTATION CONTROLS, TREE PROTECTION, DRAINAGE, UTILITY AND STREET LAYOUTS. THE PUBLIC WORK'S CONSTRUCTION INSPECTOR SHALL ARRANGE A MEETING DATE FOR THE CONTRACTOR WITH THE SUPERVISOR OF ENVIRONMENTAL INSPECTION, AT LEAST THREE (3) DAYS PRIOR TO THE MEETING TIME. THE CONSTRUCTION INSPECTOR, DESIGN ENGINEER AND/OR FIELD ENGINEER SHALL ALSO BE PRESENT AT THIS MEETING.

   e. ANY SIGNIFICANT VARIATION IN MATERIALS OR LOCATIONS OF CONTROLS OR FENCES FROM THAT SHOWN ON THE APPROVED PLANS MUST BE APPROVED BY THE ENGINEER, ENVIRONMENTAL SPECIALIST, OR ARBORIST, AS APPROPRIATE.

   f. THE CONTRACTOR IS TO INSPECT THE CONTROLS AND FENCES AT WEEKLY INTERVALS AND AFTER EVERY SIGNIFICANT RAINFALL TO INSURE THEY HAVE NOT BEEN SUBSTANTIALLY DISTURBED. THE PERSON(S) OR FIRM(S) RESPONSIBLE FOR MAINTENANCE OF CONTROLS AND FENCES SHALL BE IMMEDIATELY DIRECTED TO MAKE ANY NECESSARY REPAIRS.

   g. ANY SEDIMENT BUILD-UP OCCURRING AFTER A SIGNIFICANT RAIN SHALL BE REMOVED AND PLACED IN THE DESIGNATED SPOIL DISPOSAL SITE.

2. PERMANENT EROSION CONTROL.

   a. ALL DISTURBED AREAS SHALL BE RESTORED AS NOTED BELOW (FOR SPECIFICS, REFERENCE THE CITY OF AUSTIN STANDARD SPECIFICATIONS -SERIES 600, ENVIRONMENTAL ENHANCEMENT AND THE PROJECT MANUAL).

   b. A MINIMUM OF FOUR INCHES OF TOPSOIL SHALL BE PLACED IN ALL DRAINAGE CHANNELS (EXCEPT ROCK) AND BETWEEN THE CURB AND RIGHT-OF-WAY LINE.

   c. THE CONTRACTOR SHALL HYDROMULCH OR SOD ALL DISTURBED AREAS UPON COMPLETION OF CONSTRUCTION, EXCEPT WHERE SOLID ROCK IS EXPOSED.

   d. THE SEEDING FOR EROSION CONTROL SHALL BE APPLIED OVER AREAS DISTURBED BY CONSTRUCTION AS FOLLOWS:

      i. FROM SEPTEMBER 15 TO MARCH 1, SEEDING SHALL BE WITH A COMBINATION OF 1 POUND OF UNHULLED BERMUDA AND 7 POUNDS OF WINTER RYE PER 1000 SQUARE FEET WITH A PURITY OF 95% WITH 90% GERMINATION.

      ii. FROM MARCH 2 TO SEPTEMBER 14, SEEDING SHALL BE WITH HULLED BERMUDA GRASS (CYNODEN DACTOLYN) AT A RATE OF 1 POUND PER 1000 SQUARE FEET WITH A PURITY OF 95% WITH 85% GERMINATION.

   e. FERTILIZER SHALL HAVE AN ANALYSIS OF 15-15-15 AND SHALL BE APPLIED AT THE RATE OF 653 POUNDS PER ACRE.

   f. THE PLANTED AREA SHALL BE IRRIGATED OR SPRINKLED IN A MANNER THAT WILL NOT ERODE THE TOPSOIL, BUT WILL SUFFICIENTLY SOAK THE SOIL TO A DEPTH OF SIX INCHES. THE IRRIGATION SHALL OCCUR AT TEN DAY INTERVALS DURING THE FIRST TWO MONTHS. RAINFALL OCCURENCES OF 1/2 INCH OR GREATER SHALL POSTPONE THE WATERING SCHEDULE ONE WEEK.

   g. MULCH TYPE USED SHALL BE EITHER CELLULOSE FIBER MULCH APPLIED AT A RATE OF 2000 POUNDS PER ACRE, OR WOOD FIBER MULCH APPLIED AT A RATE OF 2500 POUNDS PER ACRE.

   h. RESTORATION SHALL BE ACCEPTABLE WHEN THE GRASS HAS GROWN AT LEAST 1-1/2" HIGH WITH 95% COVERAGE, PROVIDED THAT NO BARE SPOTS LARGER THAN 16 SQUARE FEET EXIST (SEE ITEM 604.7 OF THE CITY OF AUSTIN STANDARD SPECIFICATIONS).

   i. WHEN REQUIRED, NATIVE GRASS SEEDINGS SHALL COMPLY WITH ITEM 604.6 OF THE CITY OF AUSTIN STANDARD SPECIFICATIONS.

DEVELOPER INFORMATION:

OWNER LOOKOUT PARTNERS, LP PHONE # (713) 524-5263

ADDRESS 2370 RICE BLVD.,SUITE 200, HOUSTON, TX. 77005

OWNER'S REPRESENTATIVE RESPONSIBLE FOR PLAN ALTERATIONS:

JAY ENGINEERING CO., INC. PHONE # (512) 259-3882

PERSON OR FIRM RESPONSIBLE FOR EROSION/SEDIMENTATION CONTROL MAINTENANCE:

CONTRACTOR

PERSON OR FIRM RESPONSIBLE FOR TREE/NATURAL AREA PROTECTION MAINTENANCE:

CONTRACTOR

NOTES:

1. EXCAVATION WILL BE LIMITED TO TRENCHING FOR UTILITIES, GRADING THE RIGHT-OF-WAYS AND GRADING PER THESE APPROVED PLANS. IF ANY DISTURBANCE OUTSIDE THE LIMITS OF CONSTRUCTION IS PROPOSED, A REVISED E&S CONTROL PLAN WILL BE SUBMITTED FOR REVIEW.
2. TEMPORARY EROSION & SEDIMENTATION CONTROLS APPROVED FOR THESE IMPROVEMENTS ARE TO BE KEPT IN PLACE DURING CONSTRUCTION UNDER THIS APPLICATION.
3. FILTERS MUST BE INSTALLED AT ALL CURB INLETS & AREA INLETS ONCE THEY ARE CONSTRUCTED PER DETAILS AND REMAIN IN PLACE UNTIL VEGETATION IS ESTABLISHED.
4. SILT FENCES WILL BE TERMINATED AT ALL ROCK BERMS WITHOUT GAPS, A J-HOOK MUST BE INCLUDED AT THE TERMINAL POINT.
5. BUFFER ZONES SHALL REMAIN UNDISTURBED EXCEPT FOR ANY CREEK CROSSINGS SHOWN ON THESE PLANS. REFER TO CREEK CROSSING DETAILS AND NOTES FOR CONSTRUCTION IN CREEKS.

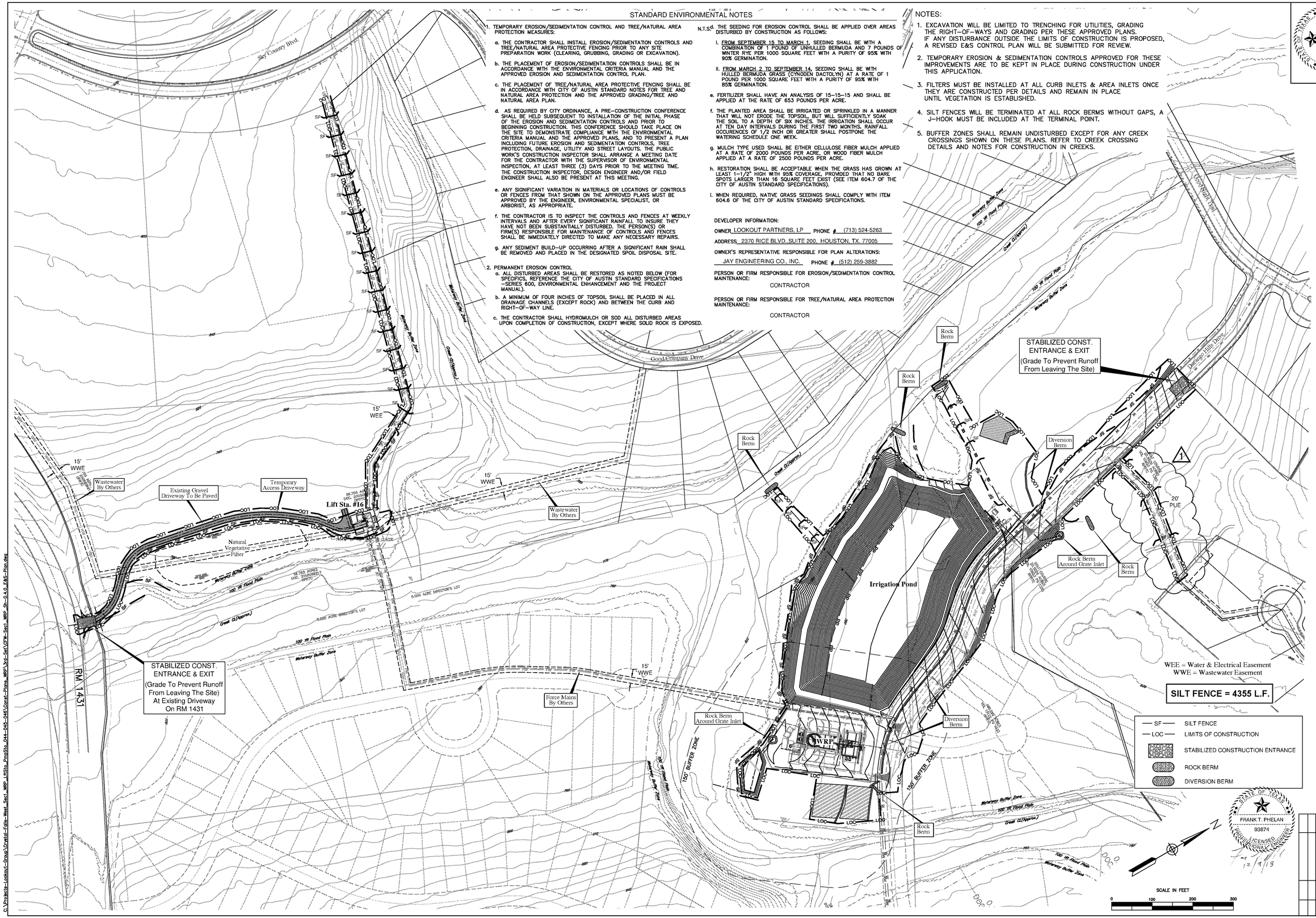

STATE OF TEXAS
FRANK T. PHELAN
93874
LICENSED
PROFESSIONAL ENGINEER
12/9/13

Jay Engineering Company, Inc.
P.O. Box 1220
Lakeway, Texas 78646-1220
Tel.: (512) 259-3882 Fax: (512) 259-8016
Texas Registered Engineering Firm F-4780

CRYSTAL FALLS WEST SEC. I
WRP, OFFSITE LIFT STA. & RECLAIMED WATER PUMP STA.

E&S CONTROL PLAN

THE LOOKOUT GROUP

SCALE: AS NOTED DWN: JJD DESIGN: FAJ DATE: APRIL 2013

DWG. NO. AS NOTED JOB NO. 157-045-20

no.	date	Revisions	appr.
1	12/13	Re-Located Easmt.	FTP

Sheet G.4.0

C:\Projects-Lookout-Group\Crystal-Falls-West_Sec1_WRP_LiftSta_PmpSta_044-045-046\Const-Plans_WRP\3rd-Set\CFW-Sec1_WRP_Sh-G.4.0_E&S-Plan.dwg

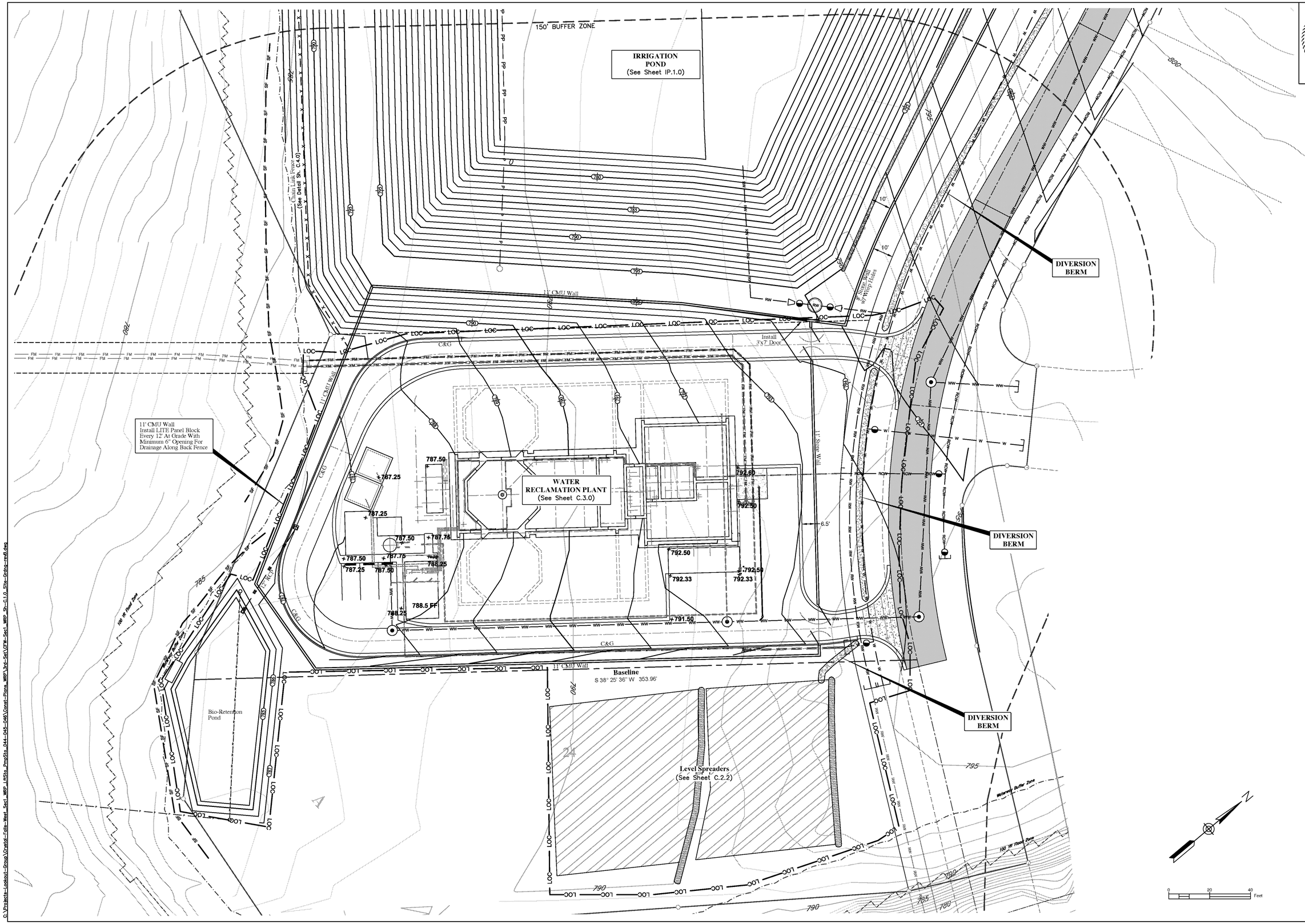

Jay Engineering Company, Inc.
P.O. Box 1220
Lakeway, Texas 78646-1220
Tel: (512) 259-3882 Fax: (512) 259-8016
Texas Registered Engineering Firm F-4780

STATE OF TEXAS
FRANK T. PHELAN
93874
PROFESSIONAL ENGINEER
5/2/13

CRYSTAL FALLS WEST - SEC. 1
WRP, OFFSITE LIFT STA. & RECLAIMED WATER PUMP STA.

SITE GRADING

THE LOOKOUT GROUP

SCALE: AS NOTED | DWN: JJD | DESIGN: FAJ | DATE: APRIL 2013
DWG. NO. AS NOTED | JOB NO. 157-045-20

no.	date	Revisions	appv.

Sheet
C.1.0

C:\Projects-Lookout-Group\Crystal-Falls-West_Sec1_WRP_LiftSta_PmpSta_044-045-046\Const-Plans_WRP\Xd-Sat\CFW-Sec1_WRP_Sh-C1.0_Site-Grdng-rev6.dwg

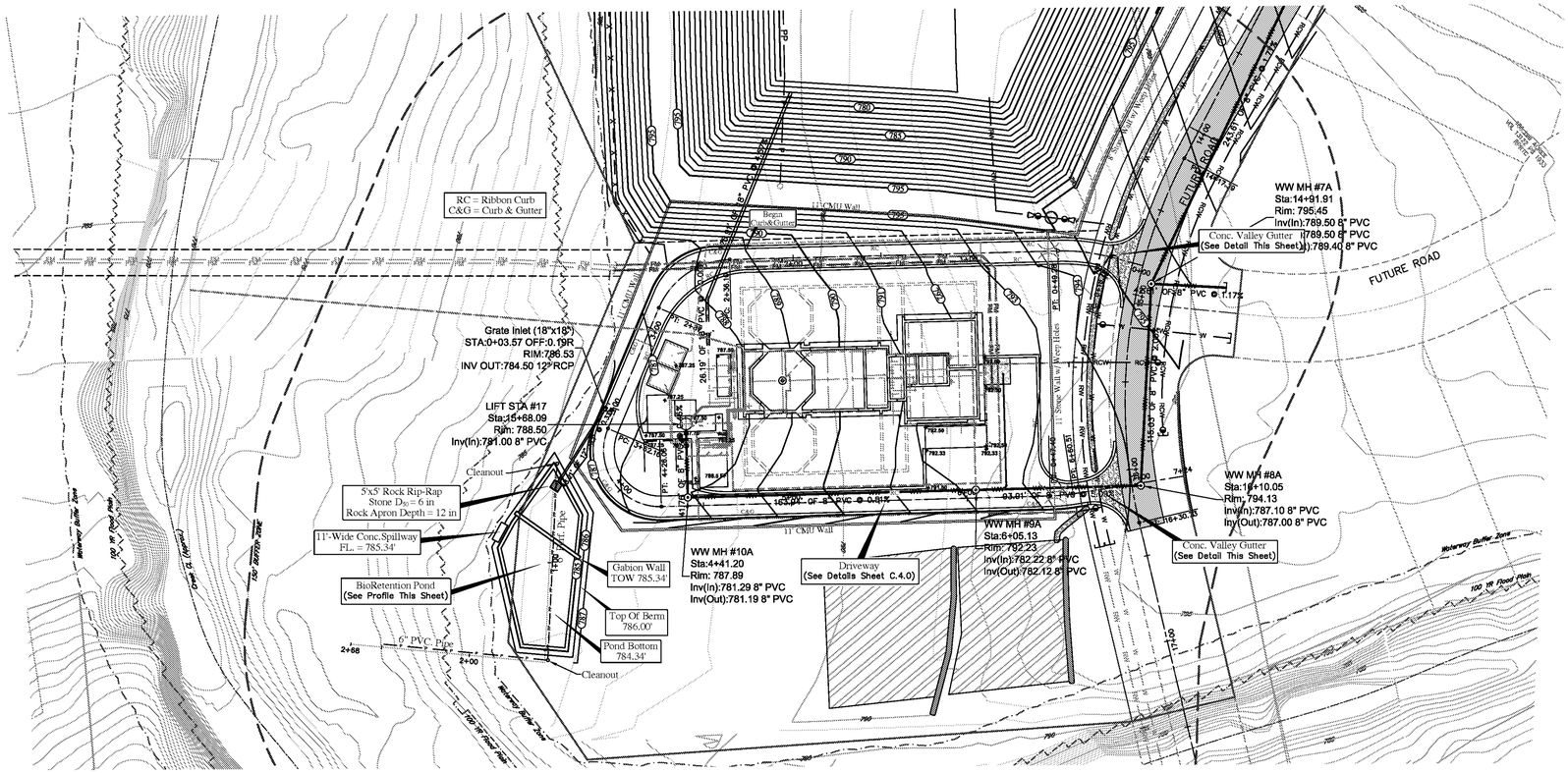

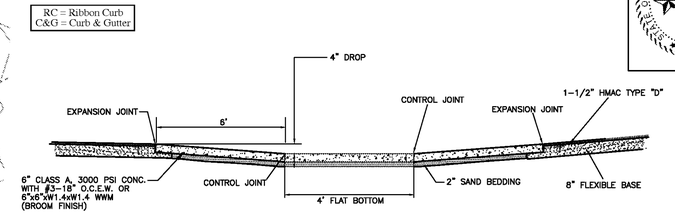

NOTES:

1. EXPANSION JOINTS SHALL BE 1/2" x 6" ASPHALT BOARD OR APPROVED EQUAL.
2. CONTROL JOINTS SHALL BE 1/4" WIDE TO A DEPTH OF 1/4 SLAB THICKNESS.

CONCRETE VALLEY GUTTER

N.T.S.

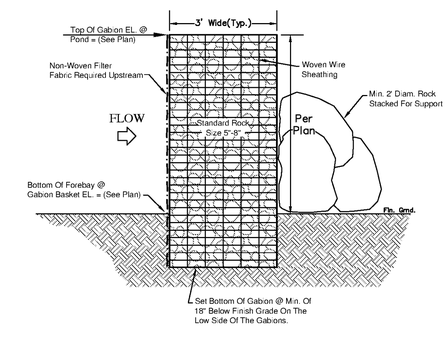

GABION WALL DETAIL

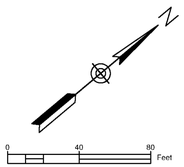

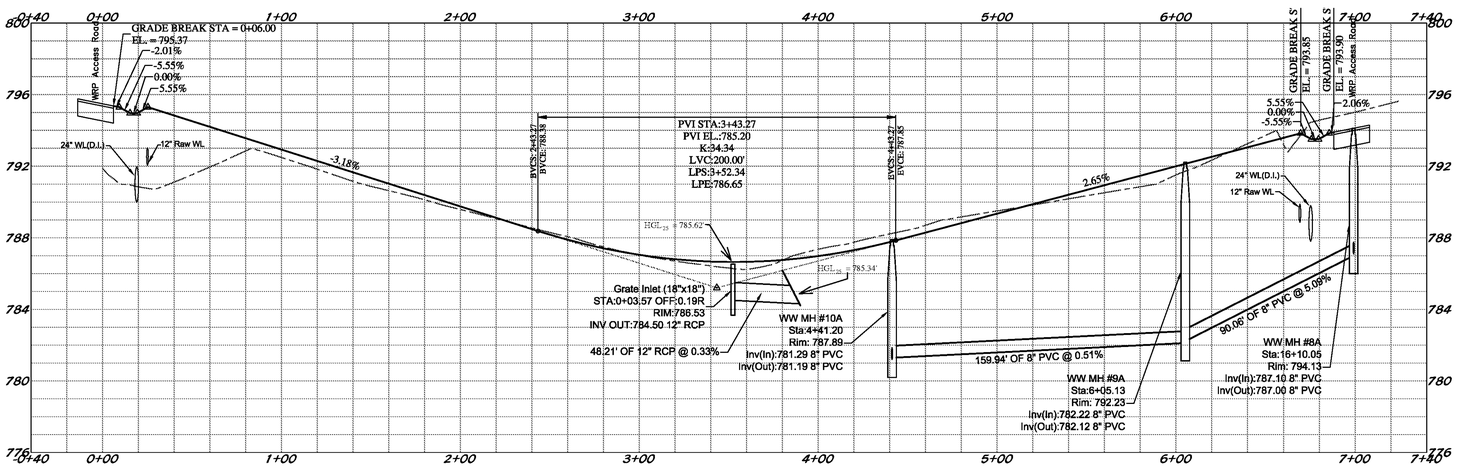

WRP DRIVEWAY

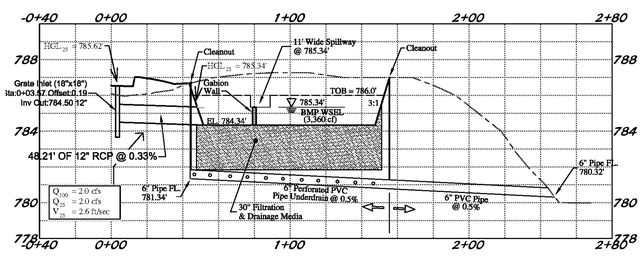

BIORETENTION POND

NOTE: Spillway To Act As Level Spreader. Q_1 = 2 cfs, Required Level Spreader Length = 5 x Q = 10ft

FRANK T. PHELAN
93374
LICENSED
PROFESSIONAL ENGINEER
6/26/13

Jay Engineering Company, Inc.
P.O. Box 1220
Lakeway, Texas 78646-1220
Tel: (512) 259-3882 Fax: (512) 259-8016
Texas Registered Engineering Firm F-4780

CRYSTAL FALLS WEST - SEC. I
WRP, OFFSITE LIFT STA. & RECLAIMED WATER PUMP STA.

DRIVEWAY PLAN & PROFILE
BIORETENTION POND

THE LOOKOUT GROUP

SCALE: AS NOTED DWN: JJD DESIGN: FAJ DATE: JUNE 2013
DWG. NO. AS NOTED JOB NO. 193-033-20

No.	date	Revisions	appr.

Sheet
C.2.0

C:\Projects-Lookout-Group\Crystal-Falls-West_Sec1_WRP_LftSta_PmpSta_044-045-046\Const-Plans_WRP\4th-Set\CFW-Sec1_WRP_Sh-C2.0_Drwy-R&P.dwg

NOTES:

1. EXISTING UTILITY LOCATIONS SHOWN HEREON ARE APPROXIMATE. CONTRACTOR IS TO VERIFY LOCATIONS OF ALL EXISTING UTILITY LINES PRIOR TO COMMENCING WORK.
2. EROSION CONTROL MATTING WILL BE REQUIRED ON ALL DISTURBED SLOPES STEEPER THAN 3:1.
3. ALL RECLAIMED WATER LINES TO BE PURPLE PVC PIPE.
4. RECLAMED WATER LINE VALVES TO BE "FLORIDA" STYLE PER DETAIL SHEET C.19.0.

KEY

- WW MH
- VALVE
- HYDRANT

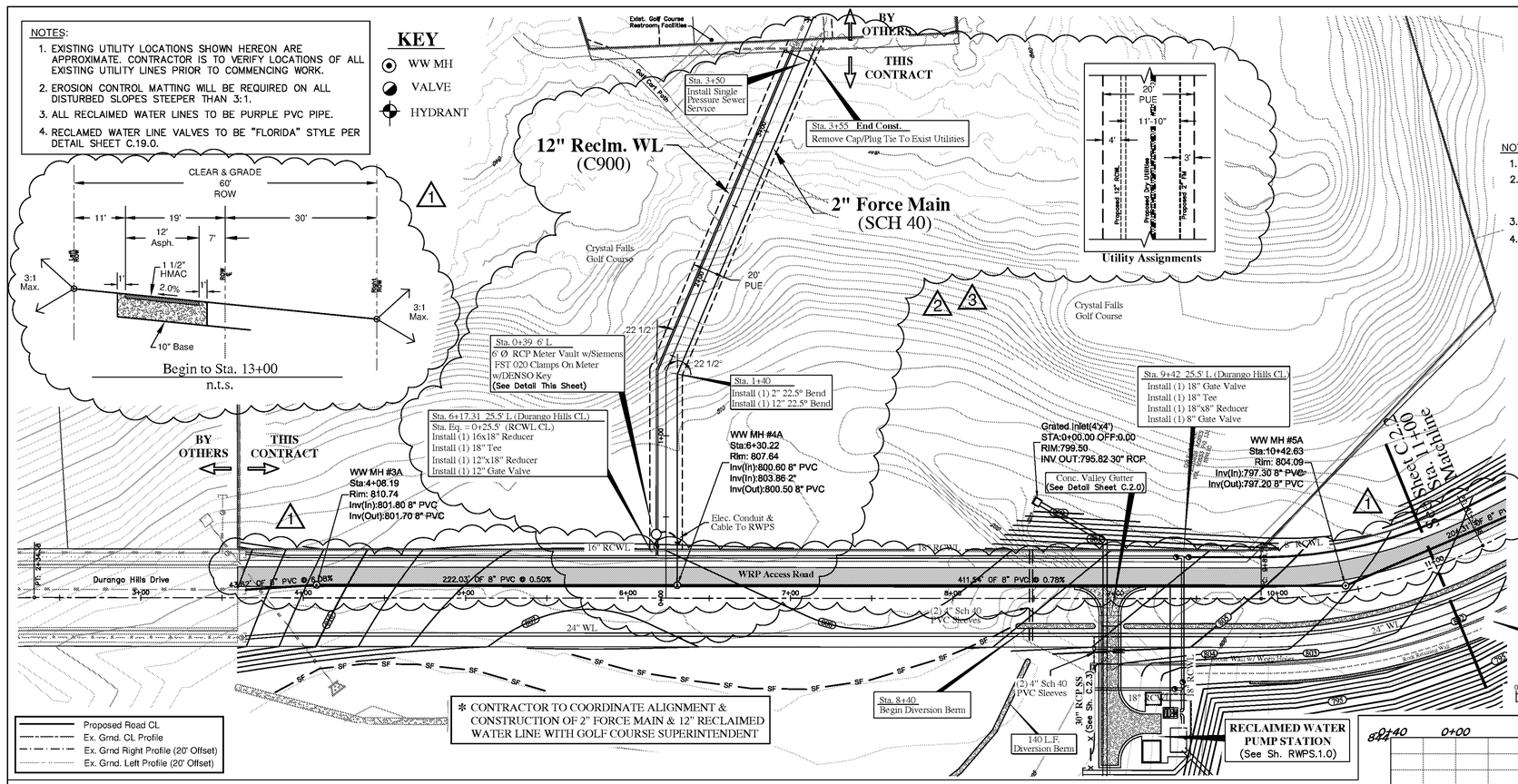

NOTES:

1. CONTRACTOR TO SUPPLY FULLY FUNCTIONAL IRRIGATION METER.
2. IRRIGATION METER TO PROVIDE TOTALIZED AND INSTANTANEOUS FLOWS AT CONTROLLER MOUNTED IN RECLAIMED WATER PUMP STATION AND TO SCADA SYSTEM.
3. METER TO BE SIEMENS FST020, CLAMP ON, WITH DENSO KIT.
4. CONDUIT AND CABLES FOR METERING TO BE PER MFR., CITY OF LEANDER AND NEC(LATEST EDITION).

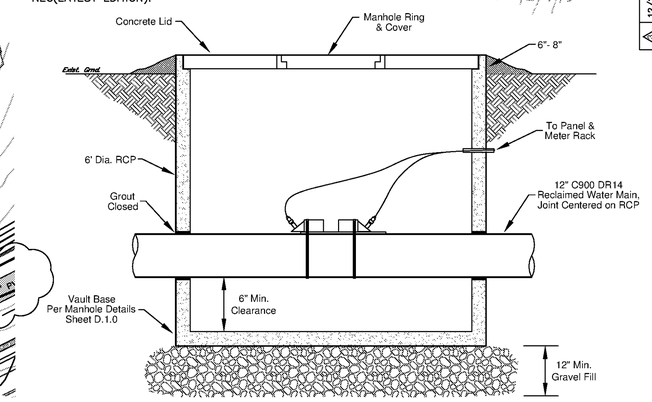

METER VAULT DETAIL

N.T.S.

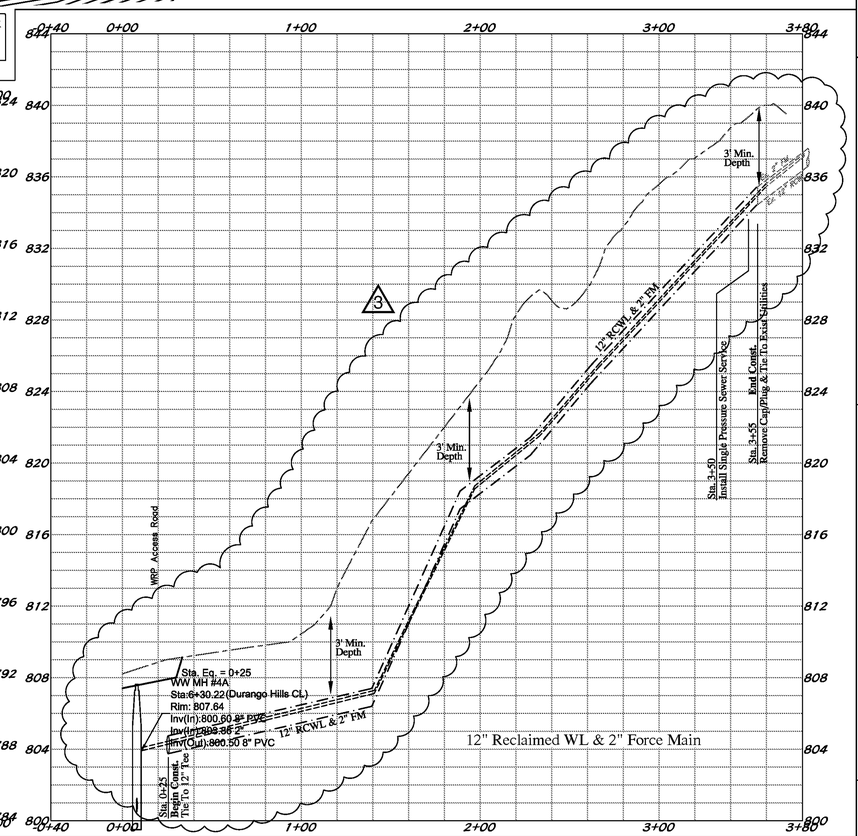

No.	Date	Revisions	Appr.
3	12/13	Cement. & Utilities Relocated	SDK
2	11/13	Utility Assignments Revised	SDK
1	11/13	Access Rd.	FTP

STATE OF TEXAS — FRANK T. PHELAN 93874 — LICENSED PROFESSIONAL ENGINEER — 12/9/13

Jay Engineering Company, Inc.
P.O. Box 1220
Lakeway, Texas 78646-1220
Tel.: (512) 259-3882 Fax: (512) 259-8016
Texas Registered Engineering Firm F-4780

CRYSTAL FALLS WEST - SEC. 1
WRP, OFFSITE LIFT STA. & RECLAIMED WATER PUMP STA.

WRP ACCESS ROAD P&P
12" RCWL & 2" FM P&P

THE LOOKOUT GROUP

SCALE: AS NOTED | DWN: JJD | DESIGN: FAJ | DATE: JUNE 2013
DWG. NO. AS NOTED | JOB NO. 193-030-20

Sheet
C.2.1

c:\Projects-lookout-Group\Crystal-Falls-West_Sec1_WRP_LiftSta_PrmSta_Ot4-045-046\Const-Plans_WRP\4th-Sh\CFW-Sec1_WRP_Sh-C2.1-2.2_WRP-Access-Rd_rev-120913.dwg

NOTES:

1. EXISTING UTILITY LOCATIONS SHOWN HEREON ARE APPROXIMATE. CONTRACTOR IS TO VERIFY LOCATIONS OF ALL EXISTING UTILITY LINES PRIOR TO COMMENCING WORK.
2. EROSION CONTROL MATTING WILL BE REQUIRED ON ALL DISTURBED SLOPES STEEPER THAN 3:1.
3. ALL RECLAIMED WATER LINES TO BE PURPLE PVC PIPE.
4. RECLAMED WATER LINE VALVES TO BE "FLORIDA" STYLE PER DETAIL SHEET C.19.0.

RAW WATER CONTROL VALVE METER NOTES

1. 8" SOLENOID ACTIVATED CONTROL VALVE IN 6' DIA. RCP VAULT (CLA-VAL 136-03, ENERGIZE TO OPEN, w/CHECK FEATURE).
2. VALVE TO BE CONTROLLED BY CITY SCADA SYSTEM TO OPERATE ONLY WHEN BCRUA SYSTEM RAW WATER PUMPS ARE CALLED.
3. METER TO BE 8" TURBINE.

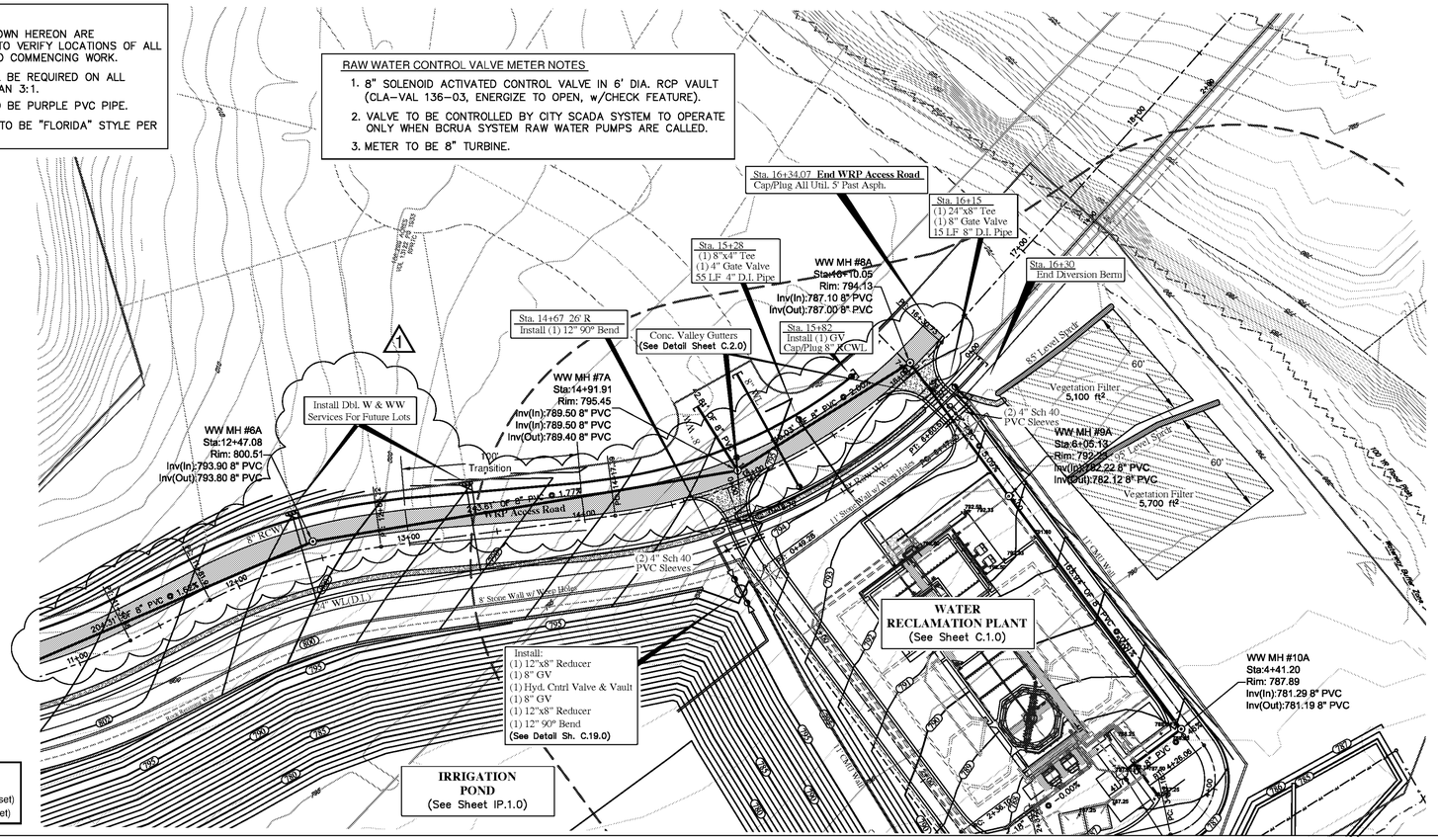

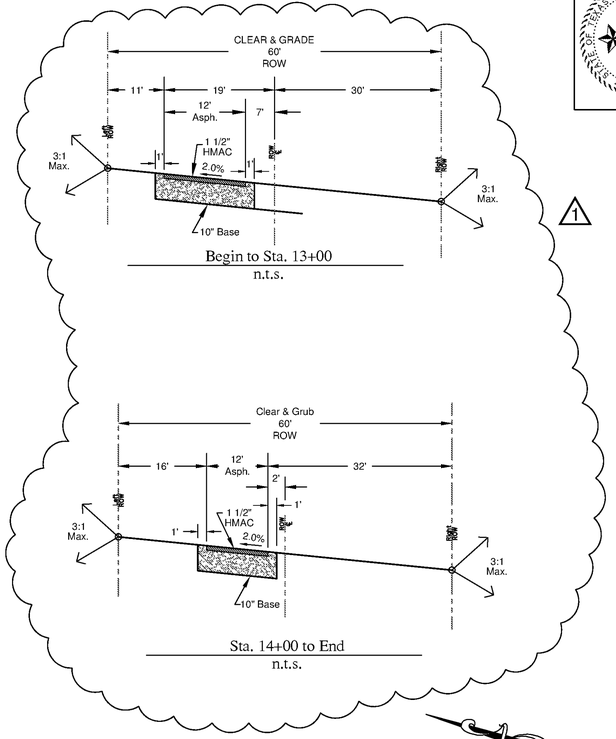

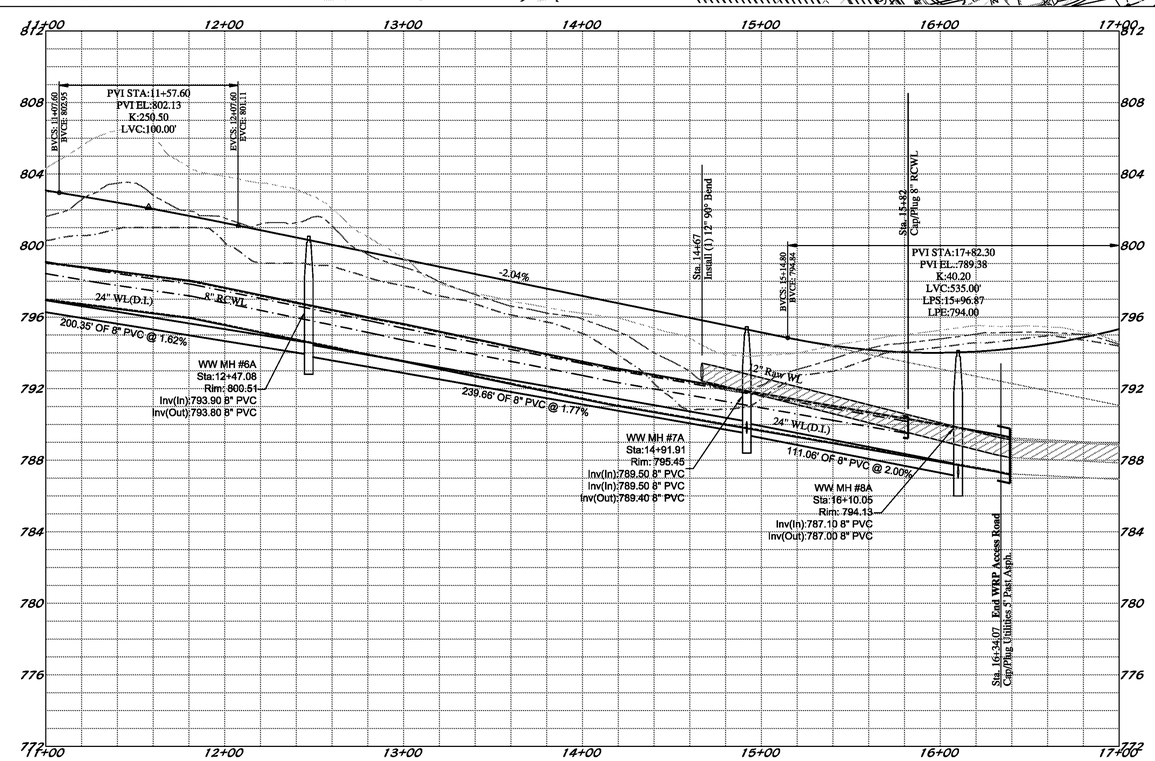

Note:
See Sheet C.2.3 For Drainage Area Map

Jay Engineering Company, Inc.
P.O. Box 1220
Lakeway, Texas 78646-1220
Tel: (512) 259-3882 Fax: (512) 259-8016
Texas Registered Engineering Firm F-4780

STATE OF TEXAS
FRANK T. PHELAN
93874
LICENSED
PROFESSIONAL ENGINEER
9/24/13

CRYSTAL FALLS WEST - SEC. 1
WRP, OFFSITE LIFT STA. & RECLAMED WATER PUMP STA.

WRP ACCESS ROAD PLAN & PROFILE

THE LOOKOUT GROUP

SCALE: AS NOTED	DWN: JJD
DESIGN: FAJ	DATE: JUNE 2013
DWG. NO. AS NOTED	JOB NO. 193-030-20

No.	date	Rev. WRP Access Rd. & Add. W & WW Svcs. Revisions	FTP
1	11/13		appr.

Sheet
C.2.2

C:\Projects-Lookout-Group\Crystal-Falls-West_Sec1_WRP_LftSta_PmpSta_044-045-046\Const-Plans_WRP\4th-Set\CFW-Sec1_WRP_Sh-C.2.1-2.2_WRP-Access-Rd_rev-120913.dwg December 09 2013 1:51pm By:jjed

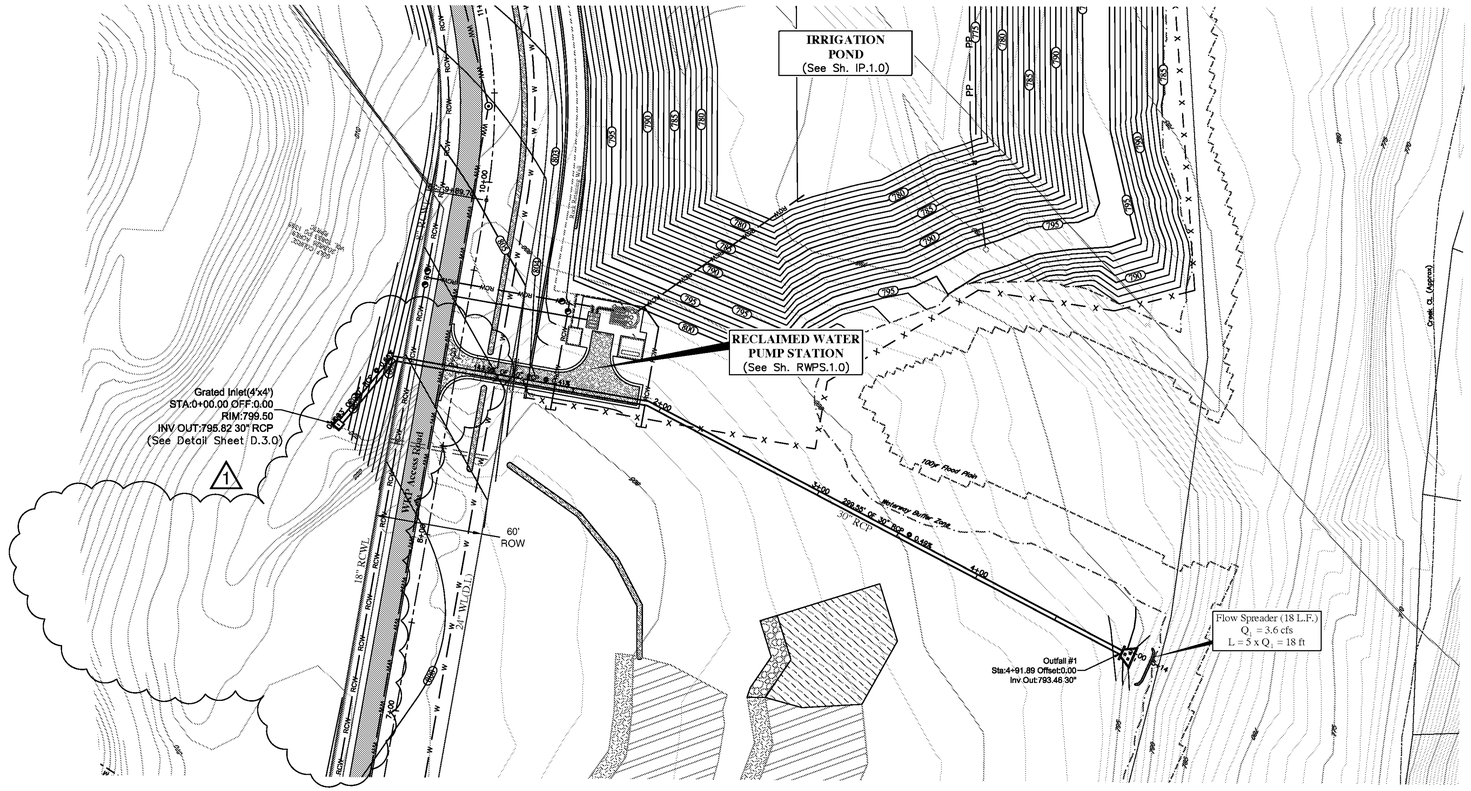

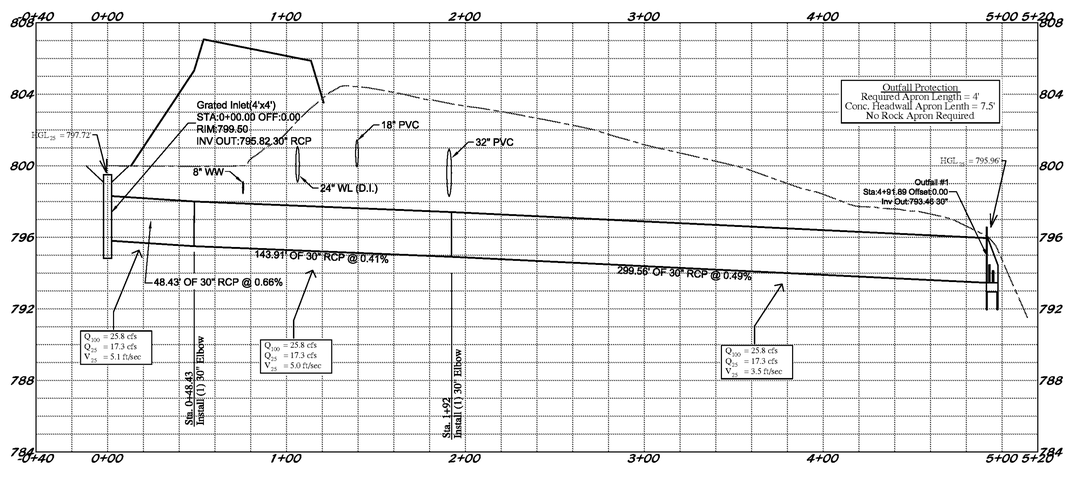

STATE OF TEXAS
FRANK T. PHELAN
93874
LICENSED PROFESSIONAL ENGINEER
5/3/13

STATE OF TEXAS
FRANK T. PHELAN
93874
LICENSED PROFESSIONAL ENGINEER
12/9/13

No.	Date	Revisions	By/Ck.
1	12/13	Re-Located Easmt	FTP

Jay Engineering Company, Inc.
P.O. Box 1220
Lago Vista, Texas 78646-1220
Tel.: (512) 259-3882 Fax: (512) 259-8016
Texas Registered Engineering Firm F-4780

CRYSTAL FALLS WEST - SEC. 1
WRP, OFFSITE LIFT STA. & RECLAIMED WATER PUMP STA.

WRP ACCESS ROAD STORM SEWER P&P

THE LOOKOUT GROUP

SCALE: AS NOTED DWN: JJD DESIGN: FAJ DATE: APRIL 2013
DWG. NO. AS NOTED JOB NO. 157-045-20

Sheet
C.2.3

G:\Projects-Lookout-Group\Crystal-Falls-West_Sec1_WRP_LftSta_PmpSta_044-045-046\Const-Plans_WRP\3rd-Set\CFW-Sec1_WRP_SW-C.2.3_WRP-Access-Rd-SS-rev6.dwg

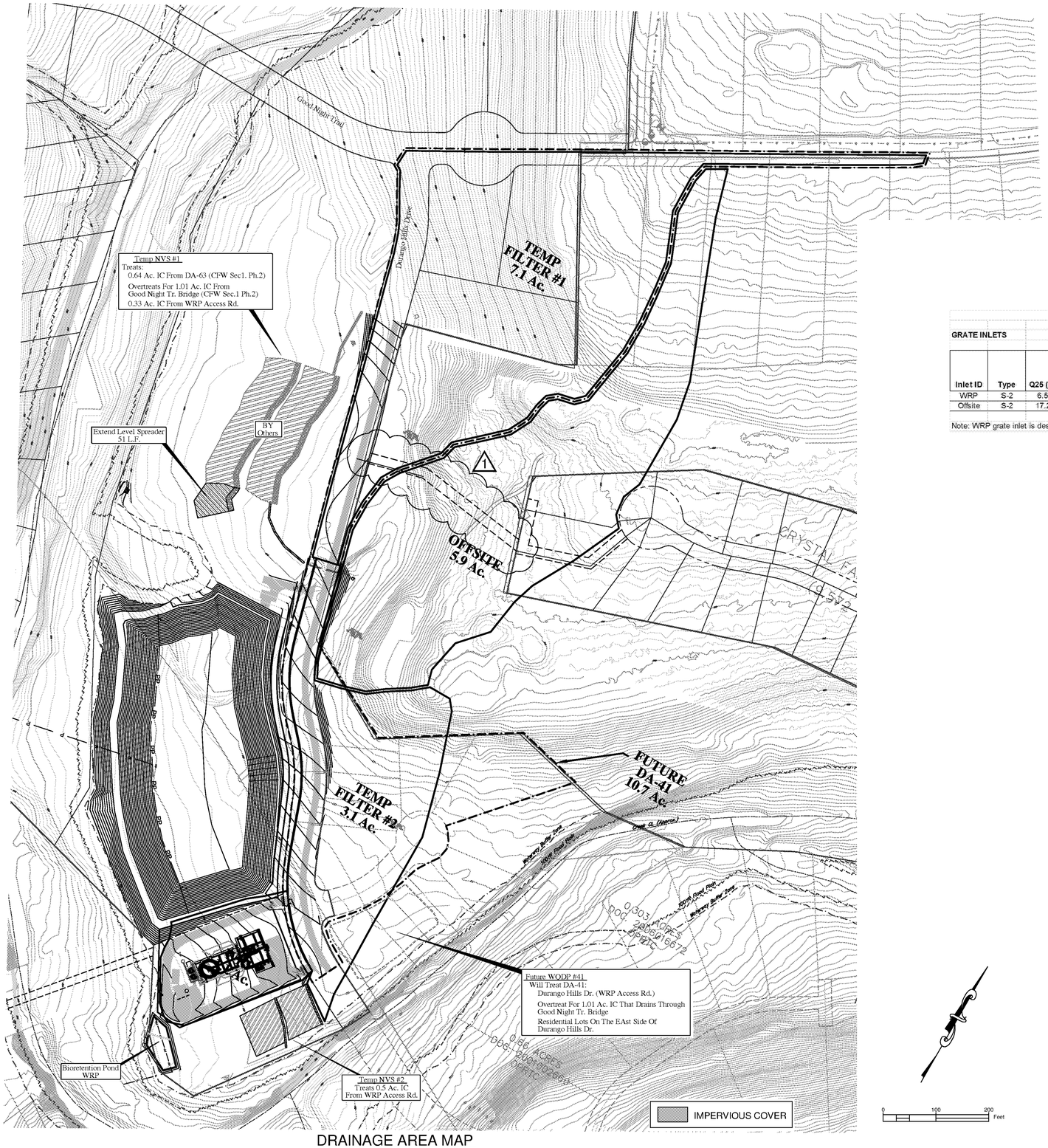

DRAINAGE AREA MAP

RATIONAL METHOD DRAINAGE SUMMARY

Drainage Area ID	Area (ac)	Time of Concentration (min)	C1	C25	C100	Q1 (cfs)	Q25 (cfs)	Q100 (cfs)
WRP	1.1	5.0	0.34	0.59	0.67	2.0	6.5	9.2
Offsite	5.9	19.0	0.18	0.47	0.54	3.6	17.3	25.8

BMP SUMMARY

BMP	Drainage Area (ac)	IC (ac)	IC %	WQV	BMP Area Required (sf)	BMP Area Provided (sf)	BMP Volume Required (cf)	BMP Volume Provided (cf)
Temp NVS #1	7.1	1.98	27.89	14,278	32,411	33,270		
Temp NVS #2	3.1	0.55	17.74	4,361	9,900	10,800		
WRP Bioretention	1.13	0.39	34.25	2,700			2,835	3,360

25-YEAR INLET CALCULATIONS

GRATE INLETS

Inlet ID	Type	Q25 (cfs)	Q pass (cfs)	Q total (cfs)	Slope (ft/ft)	a (in)	Y_0 (ft)	Ponded Width (ft)	Fig 4-9 Qg/Ag (cfs/sqft)	Ag (sqft)	Open Area of Inlet (sqft)	A/Ag	a/Y_0	Q/Qg	Q Intercepted (cfs)	Q pass (cfs)	Proposed Grate Size
WRP	S-2	6.55		6.55	N/A	0	0.7	N/A	2.02	3.2	1	0.31	N/A	0.31	2.03	4.52	1.5' x 1.5'
Offsite	S-2	17.29		17.29	N/A	0	1	N/A	2.41	7.2	9	1.25	N/A	1	17.29	0.00	4' x 4'

Note: WRP grate inlet is designed to capture Q1 and route it to bioretention pond. Excess flow spills over curb.

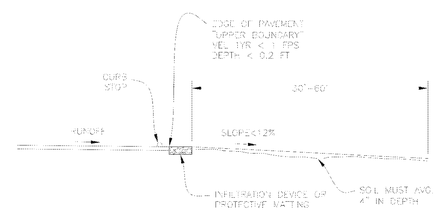

Soil Requirements: The soil must average 4-inches in depth. Rock crop areas may be present but must be deducted from the total filter strip area and must not affect the function of the Vegetative Filter Strip.

NATURAL VEGETATIVE FILTER STRIP DETAIL

STATE OF TEXAS
FRANK T. PHELAN
93874
LICENSED PROFESSIONAL ENGINEER
12/9/13

STATE OF TEXAS
FRANK T. PHELAN
93874
LICENSED PROFESSIONAL ENGINEER
6/26/13

No.	Date	Revisions	Easmt	appr.
1	12/13	Re-Located		FTP

Jay Engineering Company, Inc.
P.O. Box 1220
Lakeway, Texas 78646-1220
Tel: (512) 259-3882 Fax: (512) 259-8016
Texas Registered Engineering Firm F-4780

CRYSTAL FALLS WEST - SEC. 1
WRP, OFFSITE LIFT STA. & RECLAIMED WATER PUMP STA.

DRAINAGE AREA MAP

THE LOOKOUT GROUP

SCALE: AS NOTED DWN: JJD DESIGN: FAJ DATE: JUNE 2013
DWG. NO. AS NOTED JOB NO. 193-030-20

Sheet
C.2.4

G:\Projects-Lookout-Group\Crystal-Falls-West_Sec1_WRP_LiftSta_PumpSta_044-045-046\Const-Plans_WRP\4th-Set\CFW-Sec1_WRP_Sh-C2.4_WRP-Drng-Area-Map.dwg

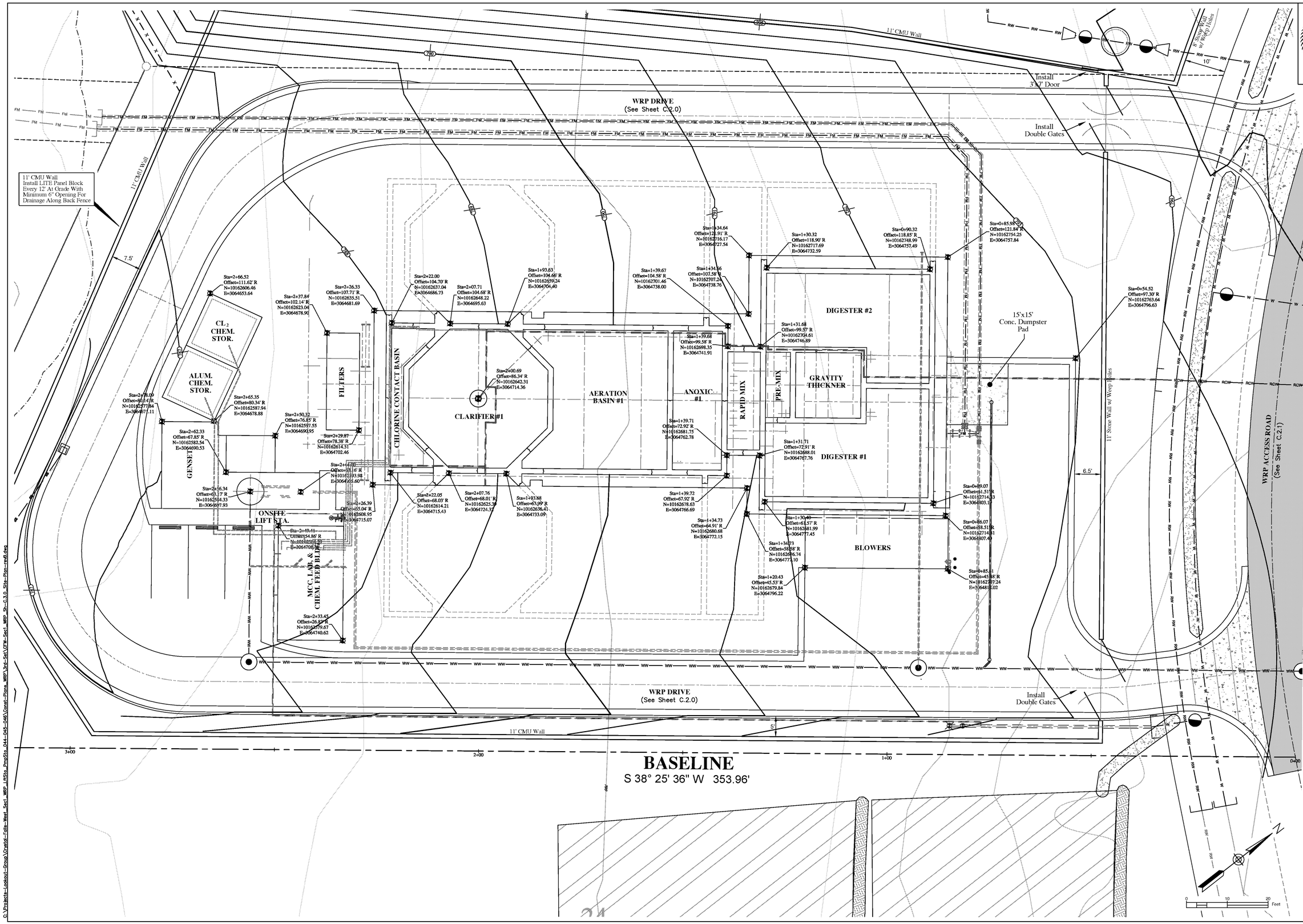

Jay Engineering Company, Inc.
P.O. Box 1220
Lampasas, Texas 76646-1220
Tel: (512) 259-3882 Fax: (512) 259-8016
Texas Registered Engineering Firm F-4780

CRYSTAL FALLS WEST - SEC. 1
WRP, OFFSITE LIFT STA. & RECLAIMED WATER PUMP STA.

SITE PLAN

THE LOOKOUT GROUP

SCALE: AS NOTED DWN: JJD DESIGN: FAJ DATE: APRIL 2013
DWG. NO. AS NOTED JOB NO. 157-045-20

no.	date	Revisions	appr.

Sheet
C.3.0

C:\Projects-Lookout-Group\Crystal-Falls-West_Sec1_WRP_LftSta_PropSta_044-045-046\Const-Plans_WRP\3rd-Set\CFW-Sec1_WRP_Sh-C.3.0_Site-Plan-rev6.dwg

NOTES:
1. FILL BOLLARDS WITH CONCRETE FOLLOWING INSTALLATION.
2. BOLLARDS TO BE PLACED AS SHOWN.
3. FINISH PAINT TO SPECIFCATIONS.

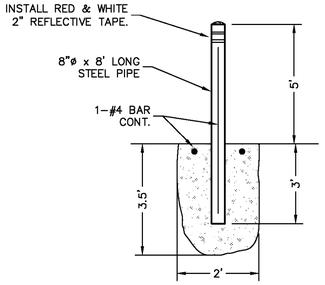

BOLLARD DETAIL (typ.)
N.T.S.

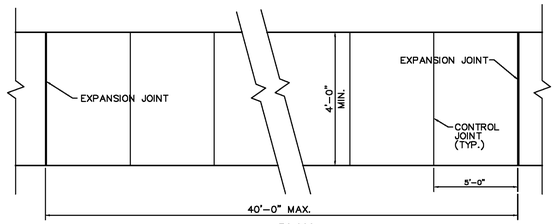

PLAN

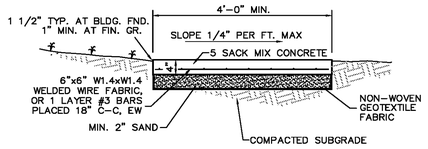

SECTION

SIDEWALK DETAIL
N.T.S

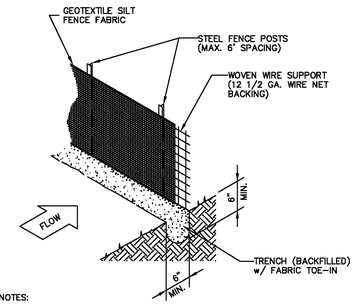

GENERAL NOTES:

1. STEEL POSTS WHICH SUPPORT THE SILT FENCE SHALL BE INSTALLED ON A SLIGHT ANGLE TOWARD THE ANTICIPATED RUNOFF SOURCE. POSTS MUST BE EMBEDDED A MINIMUM OF ONE FOOT.
2. THE TOE OF THE SILT FENCE SHALL BE TRENCHED IN WITH A SPADE OR MECHANICALLY TRENCHED, SO THAT THE DOWNSLOPE FACE OF THE TRENCH IS FLAT AND PERPENDICULAR TO THE LINE OF FLOW.
3. THE TRENCH MUST BE A MINIMUM OF 6 INCHES DEEP AND 6 INCHES WIDE TO ALLOW FOR THE SILT FENCE MATERIAL TO BE LAID IN THE GROUND AND BACKFILLED WITH COMPACTED MATERIAL.
4. SILT FENCE SHOULD BE SECURELY FASTENED TO EACH STEEL POST OR TO WOVEN WIRE, WHICH IS IN TURN ATTACHED TO THE STEEL FENCE POSTS.
5. INSPECTION SHALL BE MADE WEEKLY OR AFTER EACH RAINFALL EVENT, AND REPAIR OR REPLACEMENT SHALL BE MADE PROMPTLY AS NEEDED.
6. SILT FENCE SHALL BE REMOVED WHEN THE SITE IS COMPLETELY STABILIZED, SO AS NOT TO BLOCK OR IMPEDE STORM FLOW OR DRAINAGE. ACCUMULATED SILT SHALL BE DISPOSED OF AS IN NO. 7 BELOW.
7. ACCUMULATED SILT SHALL BE REMOVED WHEN IT REACHES A DEPTH OF 6 INCHES. THE SILT SHALL BE DISPOSED OF IN AN APPROVED SITE AND IN SUCH A MANNER AS TO NOT CONTRIBUTE TO ADDITIONAL SILTATION.

SILT FENCE
N.T.S.

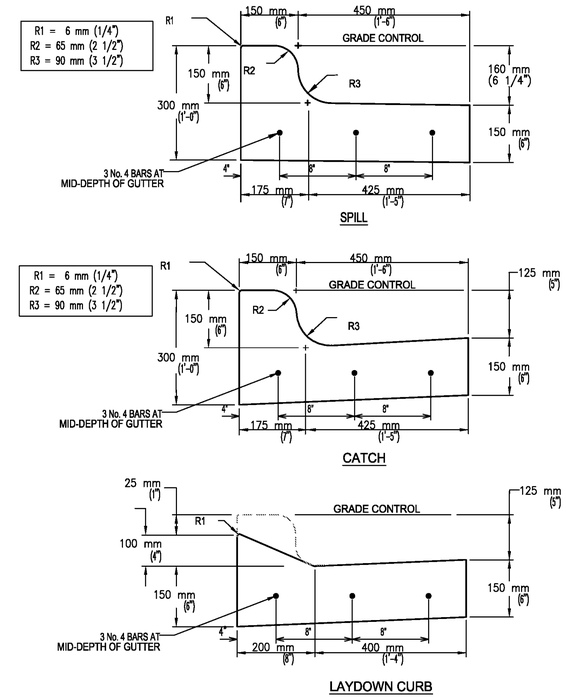

CURB & GUTTER DETAIL
N.T.S.

NOTE:
ALL CONCRETE SHALL BE CLASS "A" = 3000 PSI

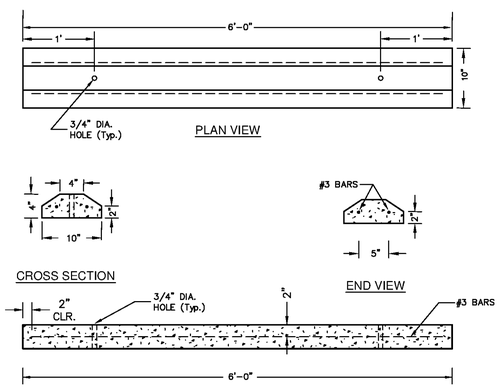

WHEEL STOP DETAIL
N.T.S.

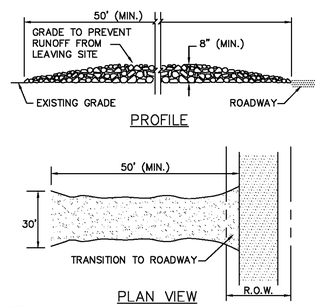

NOTES:
1. STONE SIZE – 3 TO 5 INCH OPEN GRADED ROCK.
2. LENGTH – AS EFFECTIVE, BUT NO LESS THAN 50 FEET.
3. THICKNESS – NOT LESS THAN 8 INCHES.
4. WIDTH – NOT LESS THAN FULL WIDTH OF ALL POINTS OF INGRESS OR EGRESS.
5. WASHING – WHEN NECESSARY, WHEELS SHALL BE CLEANED TO REMOVE SEDIMENT PRIOR TO ENTRANCE ONTO PUBLIC ROADWAY. WHEN WASHING IS REQUIRED, IT SHALL BE DONE ON AN AREA STABILIZED WITH CRUSHED STONE WHICH DRAINS INTO AN APPROVED TRAP OR SEDIMENT BASIN. ALL SEDIMENT SHALL BE PREVENTED FROM ENTERING ANY STORM DRAIN, DITCH OR WATERCOURSE USING APPROVED METHODS.
6. MAINTENANCE – THE ENTRANCE SHALL BE MAINTAINED IN A CONDITION WHICH WILL PREVENT TRACKING OR FLOWING OF SEDIMENT INTO PUBLIC ROADWAYS. THIS MAY REQUIRE PERIODIC TOP DRESSING WITH ADDITIONAL STONE AS CONDITIONS DEMAND, AND REPAIR AND/OR CLEAN-OUT OF ANY MEASURES USED TO TRAP SEDIMENT. ALL SEDIMENT SPILLED, DROPPED, WASHED OR TRACKED ONTO PUBLIC ROADWAY MUST BE REMOVED IMMEDIATELY.
7. DRAINAGE – ENTRANCE MUST BE PROPERLY GRADED OR INCORPORATE A DRAIN SWALE TO PREVENT RUNOFF FROM LEAVING THE CONSTRUCTION SITE.

STABILIZED CONSTRUCTION ENTRANCE
N.T.S.

NOTES:

1. BASE MATERIAL TO BE TXDOT GRADE 1 OR 2 MEETING REQUIREMENTS OF SERIES 200 SECTION 210S OF COA STANDARD SPECS.
2. CONTRACTOR TO INSTALL BASE ROAD SECTION PRIOR TO PLANT CONSTRUCTION. HMAC TO BE INSTALLED FOLLOWING SUBSTANTIAL COMPLETION OF PLANT.

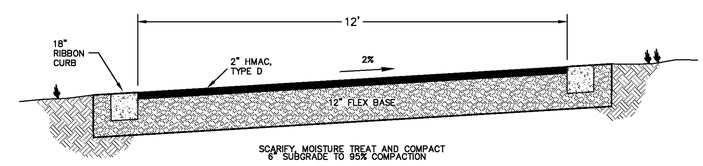

Sta. 0+00 to 2+50

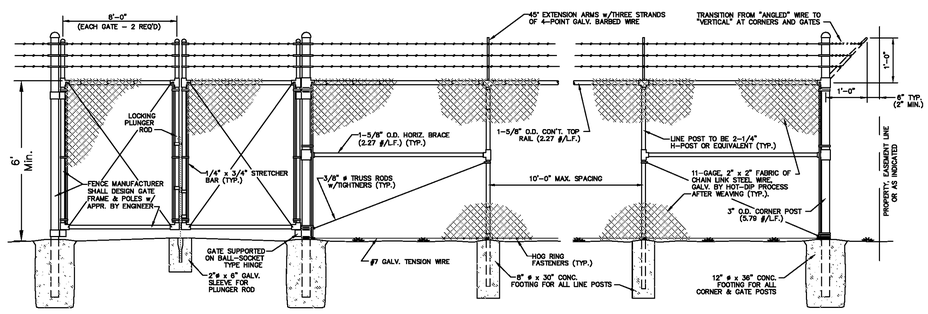

NOTE:
FENCING POLES, FABRIC & HARDWARE TO BE BLACK VINYL COATED.

CHAIN LINK FENCE DETAILS
N.T.S.

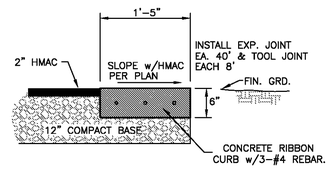

RIBBON CURB DETAILS
N.T.S.

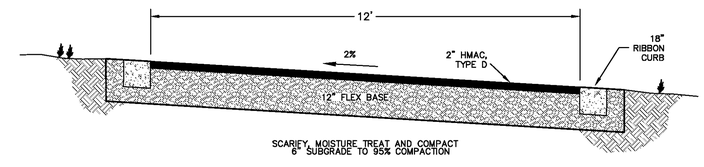

Sta. 2+50 to End

TYPICAL DRIVEWAY SECTION
n.t.s.

FRANK T. PHELAN 93874 PROFESSIONAL ENGINEER 4/16/13

Jay Engineering Company, Inc.
P.O. Box 1220
Leander, Texas 78646-1220
Tel.: (512) 259-3882 Fax.: (512) 259-9016
Texas Registered Engineering Firm F-4780

CRYSTAL FALLS WEST - SEC. I
WRP, OFFSITE LIFT STA. & RECLAIMED WATER PUMP STA.

SITE DETAILS

THE LOOKOUT GROUP

SCALE: AS NOTED DWN: JJD DESIGN: FAJ DATE: APRIL 2013
DWG. NO. AS NOTED JOB NO. 157-045-20

no.	date	Revisions	appv.

Sheet
C.4.0

C:\Projects-Lookout-Group\Crystal-Falls-West_Sec1_WRP_LiftSta_PmpStn_044-045-046\Const-Plans_WRP\3rd-Set\CFW-Sec1_WRP_SP-C-4.0_Site-Details.dwg

DESIGN FLOW RATES

HEADWORKS
Q (DESIGN) = 0.79 MGD
Q (PEAK) = 3.16 MGD

RAPID MIX, ANOXIC, AERATION, CLARIFIER, CHLORINE CONTACTOR
Q (DESIGN) = 0.25 MGD
Q (PEAK) = 1.00 MGD

FILTER
Q (DESIGN) = 0.50 MGD
Q (PEAK) = 1.00 MGD

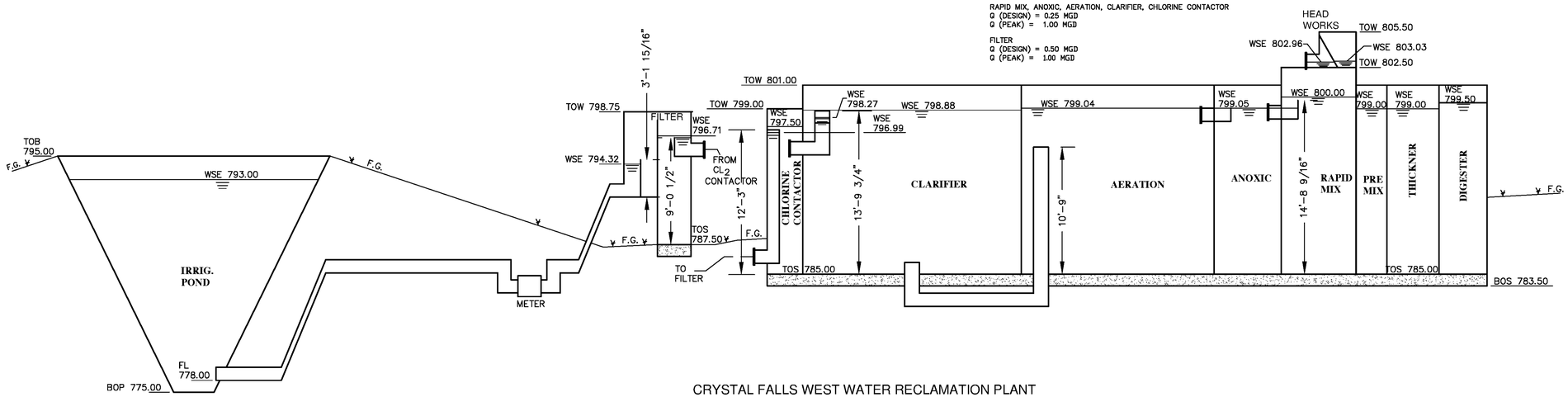

CRYSTAL FALLS WEST WATER RECLAMATION PLANT
HYDRAULIC PROFILE

N.T.S.

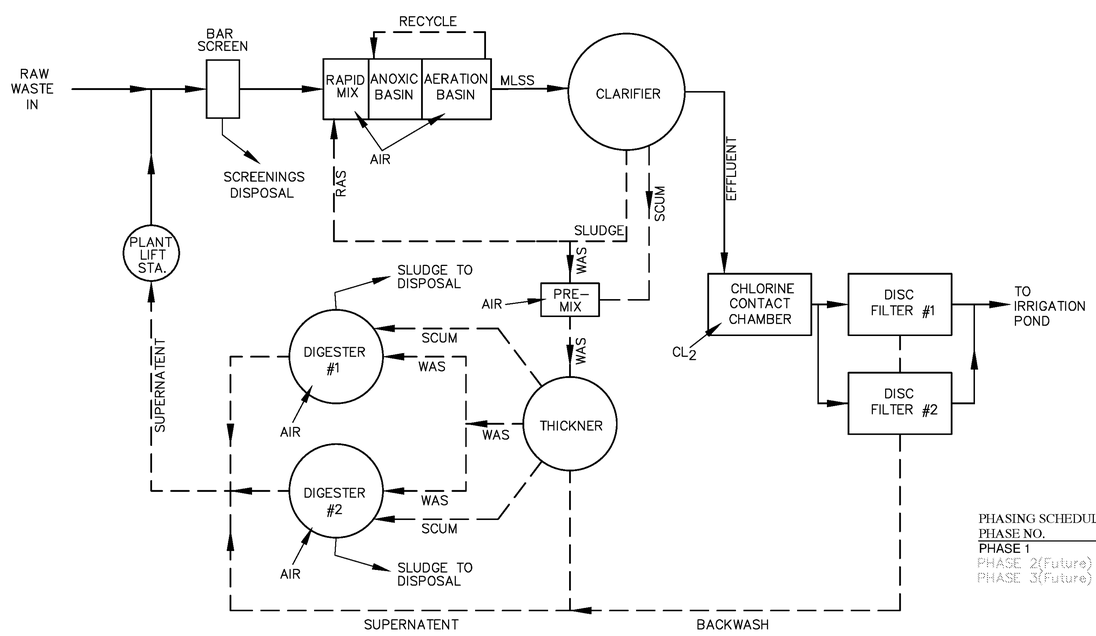

PROCESS FLOW DIAGRAM

N.T.S.

PHASING SCHEDULE

PHASE NO.	PHASE CAP.	PLANT CAP.
PHASE 1	250,000 GPD	250,000 GPD
PHASE 2(Future)	259,000 GPD	509,000 GPD
PHASE 3(Future)	259,000 GPD	768,000 GPD

NOTES:

1. MANUFACTURER OF TREATMENT EQUIPMENT SHALL BE RESPOSIBLE FOR ADEQUATE SIZING OF GATES, PIPES, WEIRS AND OPENINGS TO PASS FLOWS REQUIRED AND AS SHOWN IN HYDRAULIC PROFILE OR SPECIFICATIONS.

2. ALL HOSE BIBS SHALL BE ⅝" UNLESS OTHERWISE STATED. VACUUM BREAKERS TO BE INSTALLED ON ALL HOSE BIBS.

3. ALL EXPOSED NON-POTABLE WATER PIPING SHALL BE COLOR-CODED AND SIGNED PER TCEQ RULES.

4. WALKWAYS AND STAIRS TO HAVE KICK PLATES PER OSHA REQUIREMENTS (TYP. ALL WALKWAYS AND STAIRS)

FRANK T. PHELAN 93874 9/16/13

Jay Engineering Company, Inc.
P.O. Box 1220
Leander, Texas 78646-1220
Tel: (512) 259-3082 Fax: (512) 259-9016
Texas Registered Engineering Firm F-4780

CRYSTAL FALLS WEST - SEC. 1
WRP, OFFSITE LIFT STA. & RECLAIMED WATER PUMP STA.

PROCESS DIAGRAM & HYDRAULIC PROFILE

THE LOOKOUT GROUP

SCALE: AS NOTED DWN: JJD DESIGN: FAJ DATE: APRIL 2013
DWG. NO. AS NOTED JOB NO. 157-045-20

no.	date	Revisions	appv.

Sheet
C.5.0

C:\Projects-Lookout-Group\Crystal-Falls-West_Sec1_WRP_LftStn_PmpStn_044-045-046\Const-Plans_WRP\3rd-Set\CFW-Sec1_WRP_Sh-C.5.0_Process-Diagram.dwg

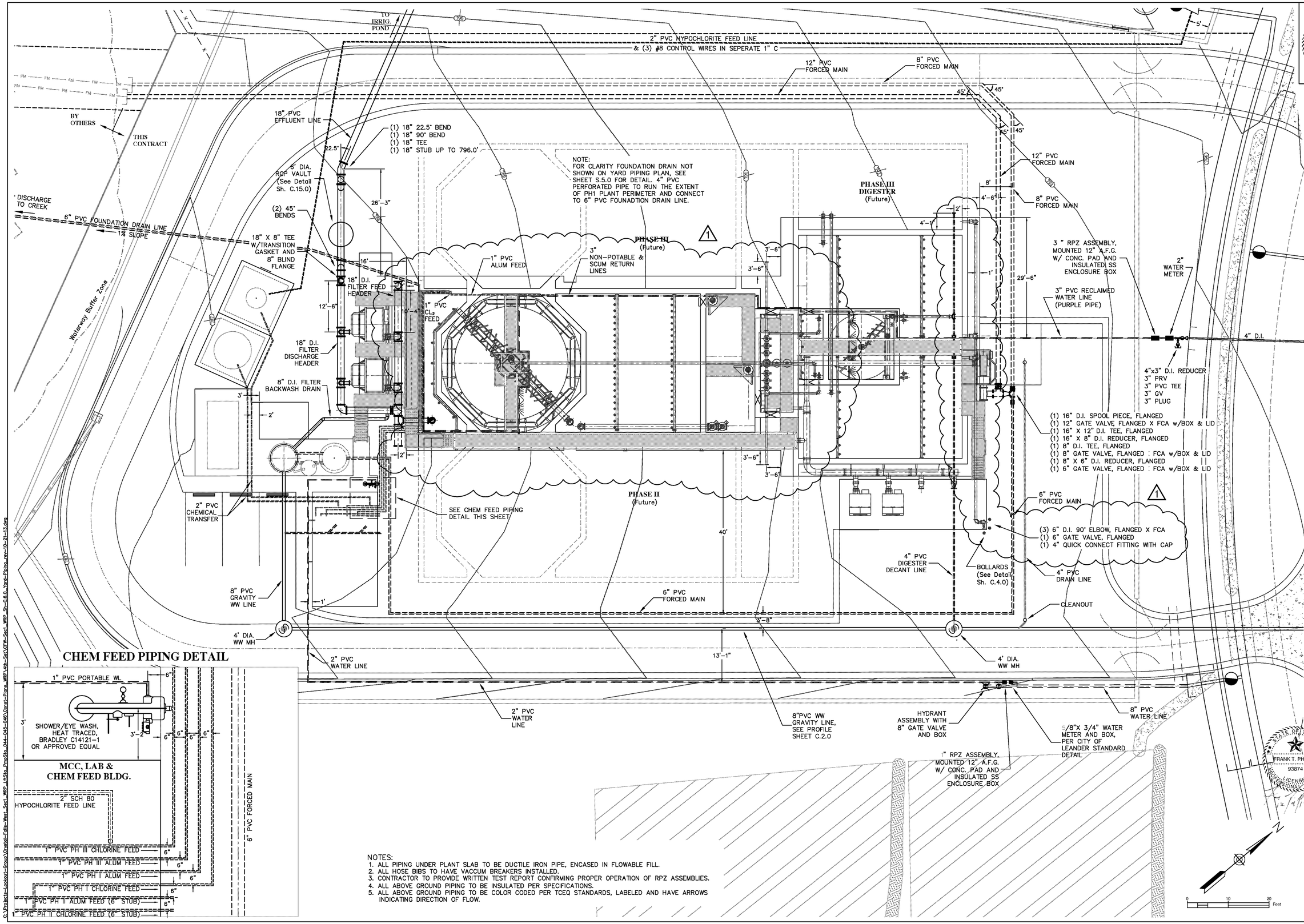
TO IRRIG. POND
2" PVC HYPOCHLORITE FEED LINE
& (3) #8 CONTROL WIRES IN SEPERATE 1" C
12" PVC FORCED MAIN
8" PVC FORCED MAIN
BY OTHERS
THIS CONTRACT
18" PVC EFFLUENT LINE
(1) 18" 22.5° BEND
(1) 18" 90° BEND
(1) 18" TEE
(1) 18" STUB UP TO 796.0'
6" DIA. ROP VAULT (See Detail Sh. C.15.0)
(2) 45° BENDS
DISCHARGE TO CREEK
6" PVC FOUNDATION DRAIN LINE
1% SLOPE
18" X 8" TEE W/TRANSITION GASKET AND 8" BLIND FLANGE
NOTE:
FOR CLARITY FOUNDATION DRAIN NOT SHOWN ON YARD PIPING PLAN, SEE SHEET S.5.0 FOR DETAIL. 4" PVC PERFORATED PIPE TO RUN THE EXTENT OF PH1 PLANT PERIMETER AND CONNECT TO 6" PVC FOUNADTION DRAIN LINE.
PHASE III DIGESTER (Future)
PHASE III (Future)
1" PVC ALUM FEED
3" NON-POTABLE & SCUM RETURN LINES
18" D.I. FILTER FEED HEADER
1" PVC CL_2 FEED
18" D.I. FILTER DISCHARGE HEADER
8" D.I. FILTER BACKWASH DRAIN
Waterway Buffer Zone
3 " RPZ ASSEMBLY, MOUNTED 12" A.F.G. W/ CONC. PAD AND INSULATED SS ENCLOSURE BOX
2" WATER METER
3" PVC RECLAIMED WATER LINE (PURPLE PIPE)
4" D.I.
4"x3" D.I. REDUCER
3" PRV
3" PVC TEE
3" GV
3" PLUG
(1) 16" D.I. SPOOL PIECE, FLANGED
(1) 12" GATE VALVE, FLANGED X FCA w/BOX & LID
(1) 16" X 12" D.I. TEE, FLANGED
(1) 16" X 8" D.I. REDUCER, FLANGED
(1) 8" D.I. TEE, FLANGED
(1) 8" GATE VALVE, FLANGED : FCA w/BOX & LID
(1) 8" X 6" D.I. REDUCER, FLANGED
(1) 6" GATE VALVE, FLANGED : FCA w/BOX & LID
2" PVC CHEMICAL TRANSFER
SEE CHEM FEED PIPING DETAIL THIS SHEET
PHASE II (Future)
6" PVC FORCED MAIN
(3) 6" D.I. 90° ELBOW, FLANGED X FCA
(1) 6" GATE VALVE, FLANGED
(1) 4" QUICK CONNECT FITTING WITH CAP
4" PVC DIGESTER DECANT LINE
BOLLARDS (See Detail Sh. C.4.0)
4" PVC DRAIN LINE
CLEANOUT
8" PVC GRAVITY WW LINE
4' DIA. WW MH
2" PVC WATER LINE
4' DIA. WW MH
2" PVC WATER LINE
8"PVC WW GRAVITY LINE, SEE PROFILE SHEET C.2.0
HYDRANT ASSEMBLY WITH 8" GATE VALVE AND BOX
5/8"X 3/4" WATER METER AND BOX, PER CITY OF LEANDER STANDARD DETAIL
8" PVC WATER LINE
3 " RPZ ASSEMBLY, MOUNTED 12" A.F.G. W/ CONC. PAD AND INSULATED SS ENCLOSURE BOX
CHEM FEED PIPING DETAIL
1" PVC PORTABLE WL
SHOWER/EYE WASH, HEAT TRACED, BRADLEY C14121-1 OR APPROVED EQUAL
MCC, LAB & CHEM FEED BLDG.
2" SCH 80 HYPOCHLORITE FEED LINE
1" PVC PH III CHLORINE FEED
1" PVC PH III ALUM FEED
1" PVC PH I ALUM FEED
1" PVC PH I CHLORINE FEED
1" PVC PH II ALUM FEED (6" STUB)
1" PVC PH II CHLORINE FEED (6" STUB)
6" PVC FORCED MAIN
NOTES:
1. ALL PIPING UNDER PLANT SLAB TO BE DUCTILE IRON PIPE, ENCASED IN FLOWABLE FILL.
2. ALL HOSE BIBS TO HAVE VACCUM BREAKERS INSTALLED.
3. CONTRACTOR TO PROVIDE WRITTEN TEST REPORT CONFIRMING PROPER OPERATION OF RPZ ASSEMBLIES.
4. ALL ABOVE GROUND PIPING TO BE INSULATED PER SPECIFICATIONS.
5. ALL ABOVE GROUND PIPING TO BE COLOR CODED PER TCEQ STANDARDS, LABELED AND HAVE ARROWS INDICATING DIRECTION OF FLOW.
0 10 20 Feet
STATE OF TEXAS
FRANK T. PHELAN
93874
LICENSED PROFESSIONAL ENGINEER
2/4/13
Jay Engineering Company, Inc.
P.O. Box 1220
Lakeway, Texas 78646-1220
Tel: (512) 259-3882 Fax: (512) 259-8016
Texas Registered Engineering Firm F-4780
CRYSTAL FALLS WEST - SEC. 1
WRP, OFFSITE LIFT STA. & RECLAIMED WATER PUMP STA.
YARD PIPING
THE LOOKOUT GROUP
SCALE: AS NOTED
DWN: JJD
DESIGN: FAJ
DATE: JUNE 2013
DWG. NO. AS NOTED
JOB NO. 193-030-20
Sheet
C.6.0
No. Date Revisions Appr.
1 10/13 Walkway & Pipe Revs. FTP
C:\Projects-Lookout-Group\Crystal-Falls-West_Sec1_WRP_LftSta_PmpSta_044-045-046-048\Const-Plans_WRP\4th-Set\CFW-Sec1_WRP_Sh-C.6.0_Yard-Piping_rev-10-21-13.dwg

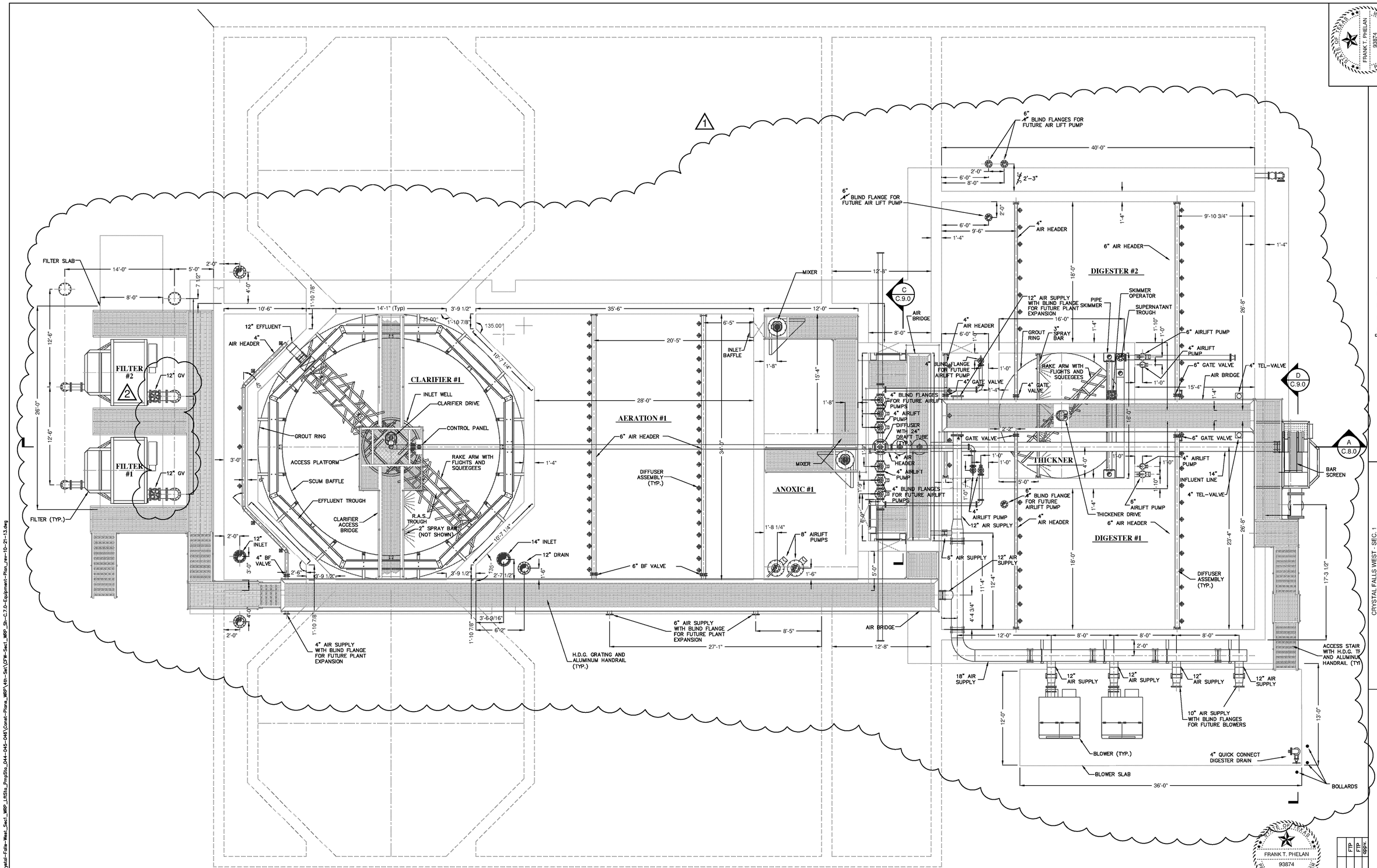

SCALE: 3/16" = 1'-0"

Jay Engineering Company, Inc.
P.O. Box 1220
Leander, Texas 78646-1220
Tel.: (512) 259-3882 Fax: (512) 259-9016
Texas Registered Engineering Firm F-4780

CRYSTAL FALLS WEST - SEC. 1
WRP, OFFSITE LIFT STA. & RECLAIMED WATER PUMP STA.

EQUIPMENT PLAN

THE LOOKOUT GROUP

no.	date	Revisions	dwn.
2	11/13	Vertical Gate Valves, Bollards, Plan, Section, Revisions	FTP
1	10/13		FTP

SCALE: AS NOTED DWN: JJO DESIGN: FAJ DATE: APRIL 2013
DWG. NO. AS NOTED JOB NO. 157-045-20

Sheet
C.7.0

FRANK T. PHELAN 93874 LICENSED PROFESSIONAL ENGINEER 11/25/13

C:\Projects-Lookout-Group\Crystal-Falls-West_Sec1_WRP_LiftSta_PrepSta_044-045-046\Const-Plans_WRP\4th-Set\CFW-Sec1_WRP_Sh-C.7.0-Equipment-Plan_rev-10-21-13.dwg

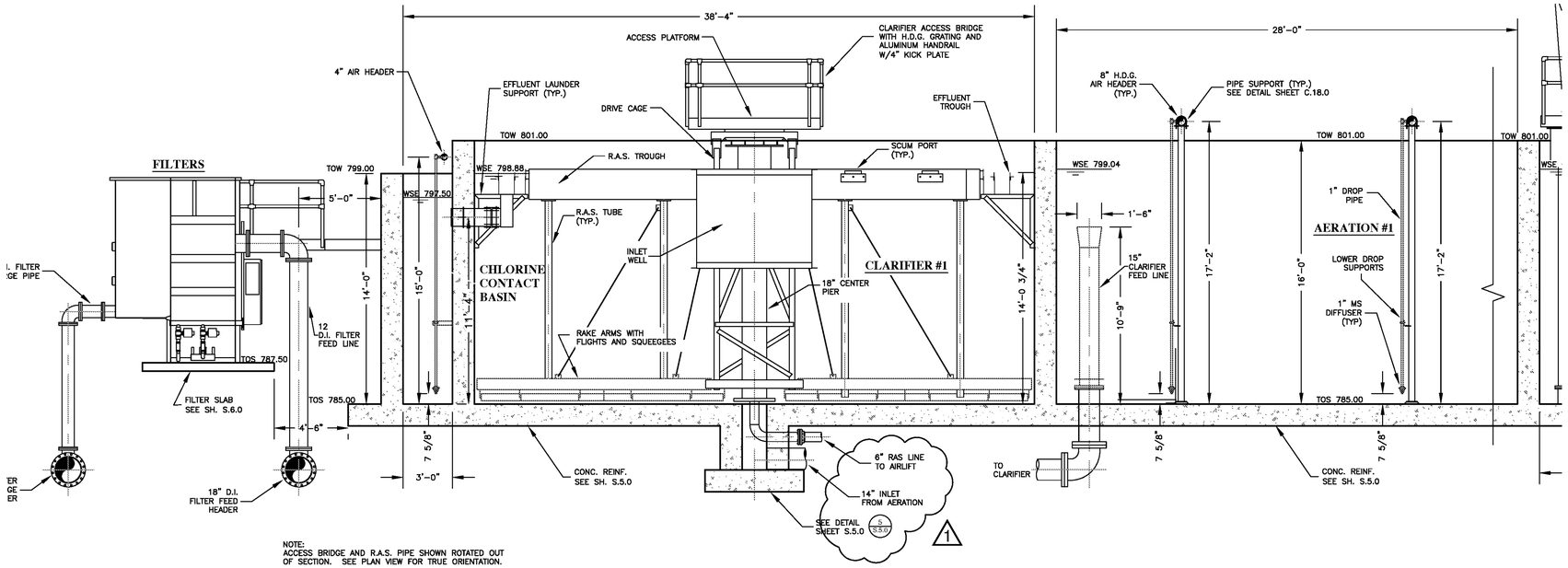

NOTE:
ACCESS BRIDGE AND R.A.S. PIPE SHOWN ROTATED OUT OF SECTION. SEE PLAN VIEW FOR TRUE ORIENTATION.

SECTION A/C.7.0
scale: 1/4" = 1'-0"

NOTES:

1. MANUFACTURER OF TREATMENT EQUIPMENT SHALL BE RESPOSIBLE FOR ADEQUATE SIZING OF GATES, PIPES, WEIRS AND OPENINGS TO PASS FLOWS REQUIRED AND AS SHOWN IN HYDRAULIC PROFILE OR SPECIFICATIONS.
2. ALL HOSE BIBS SHALL BE ⅝" UNLESS OTHERWISE STATED. VACUUM BREAKERS TO BE INSTALLED ON ALL HOSE BIBS.
3. ALL EXPOSED NON-POTABLE WATER PIPING SHALL BE COLOR-CODED AND SIGNED PER TCEQ RULES.
4. WALKWAYS AND STAIRS TO HAVE KICK PLATES PER OSHA REQUIREMENTS (TYP. ALL WALKWAYS AND STAIRS)
5. ALL DEPTHS OF COVER FOR PIPES UNDER SLABS TO BE PER EQUIPMENT MANUFACTURERS RECOMMENDATIONS, UNLESS NOTED OTHERWISE.
6. ALL FABRICATED STEEL EQUIPMENT TO BE H.D.G., UNLESS NOTED OTHERWISE.
7. ALL UNDER SLAB PIPING TO BE D.I. ENCASED IN FLOWABLE FILL.
8. ALL GRATINGS TO BE SECURED WITH BOLTED CLIPS.

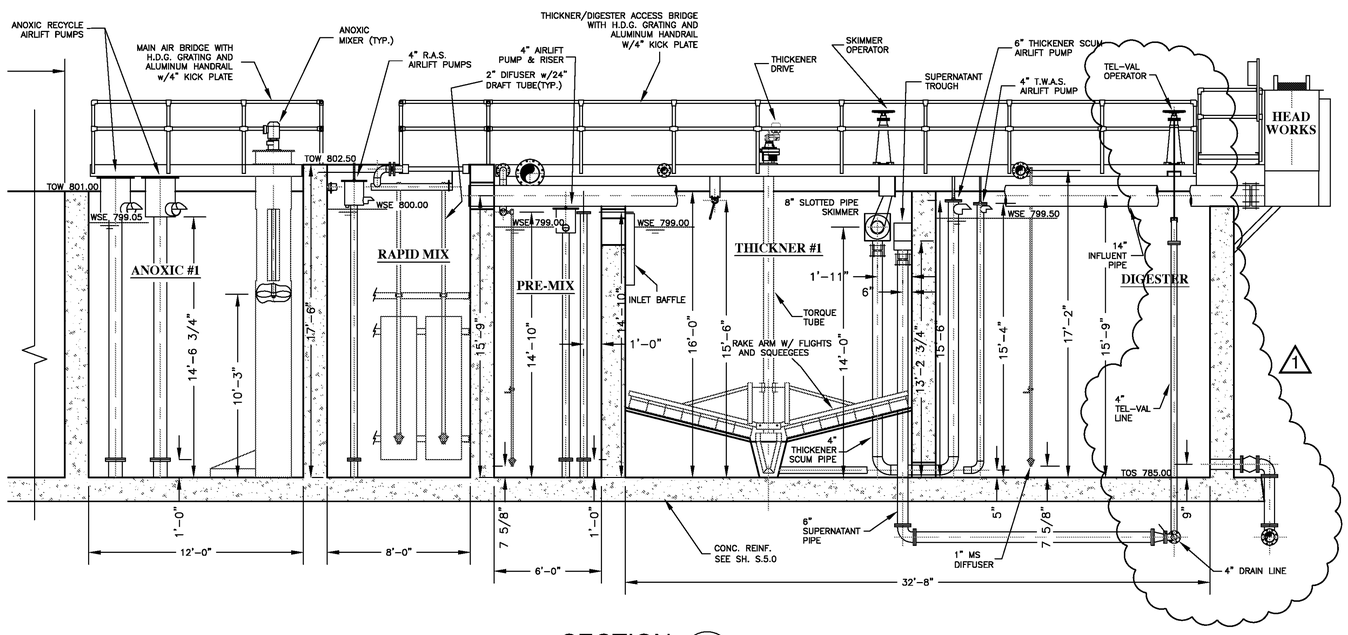

SECTION A/C.7.0
scale: 1/4" = 1'-0"

STATE OF TEXAS
FRANK T. PHELAN
93874
LICENSED
PROFESSIONAL ENGINEER
11/25/13

rev.	date			
1	10/13	WRP Equip.Revs. Revisions	FTP	oppv.

THE LOOKOUT GROUP

SCALE: AS NOTED DWN: JJD DESIGN: FAJ DATE: APRIL 2013
DWG. NO. AS NOTED JOB NO. 157-045-20

Sheet
C.8.0

Jay Engineering Company, Inc.
P.O. Box 1220
Leander, Texas 78646-1220
Tel: (512) 259-3882 Fax: (512) 259-9016
Texas Registered Engineering Firm F-4780

CRYSTAL FALLS WEST - SEC. 1
WRP, OFFSITE LIFT STA. & RECLAIMED WATER PUMP STA.

EQUIPMENT MODULE SECTIONS & DETAILS

C:\Projects-Lookout-Group\Crystal-Falls-West_Sec1_WRP_LiftSta_PmpSta_044-045-046\Const-Plans_WRP\4th-Set\CFW-Sec1_WRP_Sh-C.8.0-9.0_Sections-Details_rev-10-21-13.dwg

NOTE:

WALL BLOUCKOUTS TO PH II & III ANOXIC BASINS TO BE CLOSED OFF WITH STIANLESS STEEL PLATES.

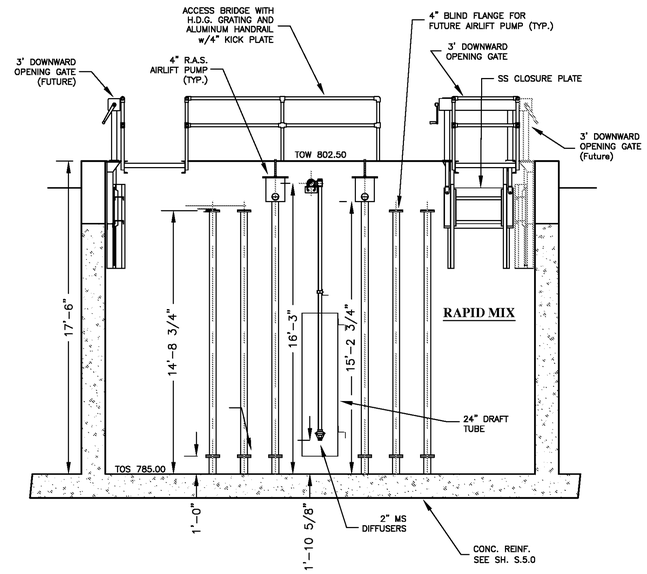

SECTION C / C.7.0
scale: 1/4" = 1'-0"

NOTES:

1. MANUFACTURER OF TREATMENT EQUIPMENT SHALL BE RESPOSIBLE FOR ADEQUATE SIZING OF GATES, PIPES, WEIRS AND OPENINGS TO PASS FLOWS REQUIRED AND AS SHOWN IN HYDRAULIC PROFILE OR SPECIFICATIONS.
2. ALL HOSE BIBS SHALL BE ⅝" UNLESS OTHERWISE STATED. VACUUM BREAKERS TO BE INSTALLED ON ALL HOSE BIBS.
3. ALL EXPOSED NON-POTABLE WATER PIPING SHALL BE COLOR-CODED AND SIGNED PER TCEQ RULES.
4. WALKWAYS AND STAIRS TO HAVE KICK PLATES PER OSHA REQUIREMENTS (TYP. ALL WALKWAYS AND STAIRS)
5. ALL DEPTHS OF COVER FOR PIPES UNDER SLABS TO BE PER EQUIPMENT MANUFACTURERS RECOMMENDATIONS, UNLESS NOTED OTHERWISE.
6. ALL FABRICATED STEEL EQUIPMENT TO BE H.D.G., UNLESS NOTED OTHERWISE.
7. ALL UNDER SLAB PIPING TO BE D.I. ENCASED IN FLOWABLE FILL.
8. ALL GRATINGS TO BE SECURED WITH BOLTED CLIPS.

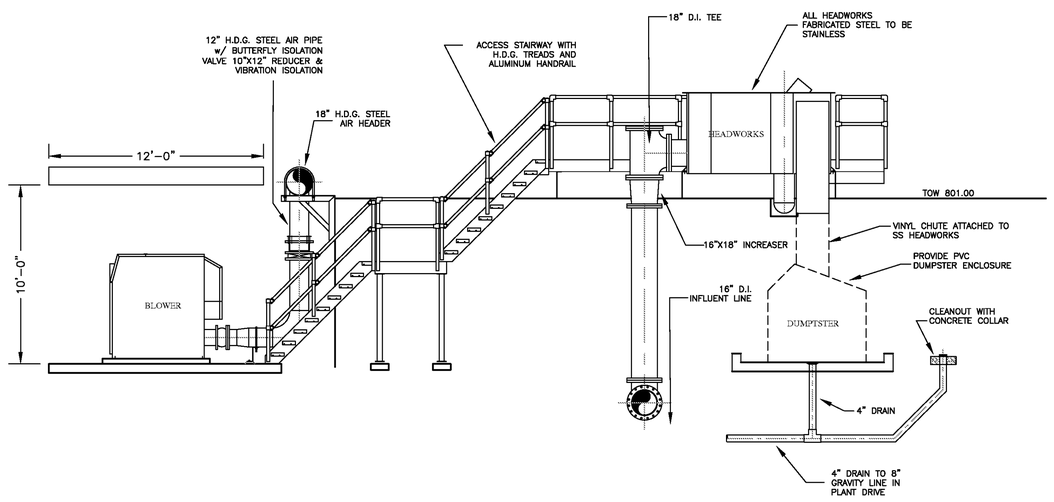

SECTION D / C.7.0
scale: 1/4" = 1'-0"

FRANK T. PHELAN
93874
LICENSED PROFESSIONAL ENGINEER
TEXAS
4/26/13

Jay Engineering Company, Inc.
P.O. Box 1220
Leander, Texas 78646-1220
Tel: (512) 259-3882 Fax: (512) 259-9016
Texas Registered Engineering Firm F-4780

CRYSTAL FALLS WEST - SEC. 1
WRP, OFFSITE LIFT STA. & RECLAIMED WATER PUMP STA.

EQUIPMENT MODULE SECTIONS & DETAILS

THE LOOKOUT GROUP

SCALE: AS NOTED DWN: JJD DESIGN: FAJ DATE: APRIL 2013
DWG. NO. AS NOTED JOB NO. 157-045-20

no.	date	Revisions	appv.

Sheet
C.9.0

C:\Projects-Lookout-Group\Crystal-Falls-West_Sec1_WRP_LiftSta_PmpSta_044-045-046\Const-Plans_WRP\4th-Set\CFW-Sec1_WRP_Sh-C.8.0-9.0_Sections-Details_rev-072813.dwg

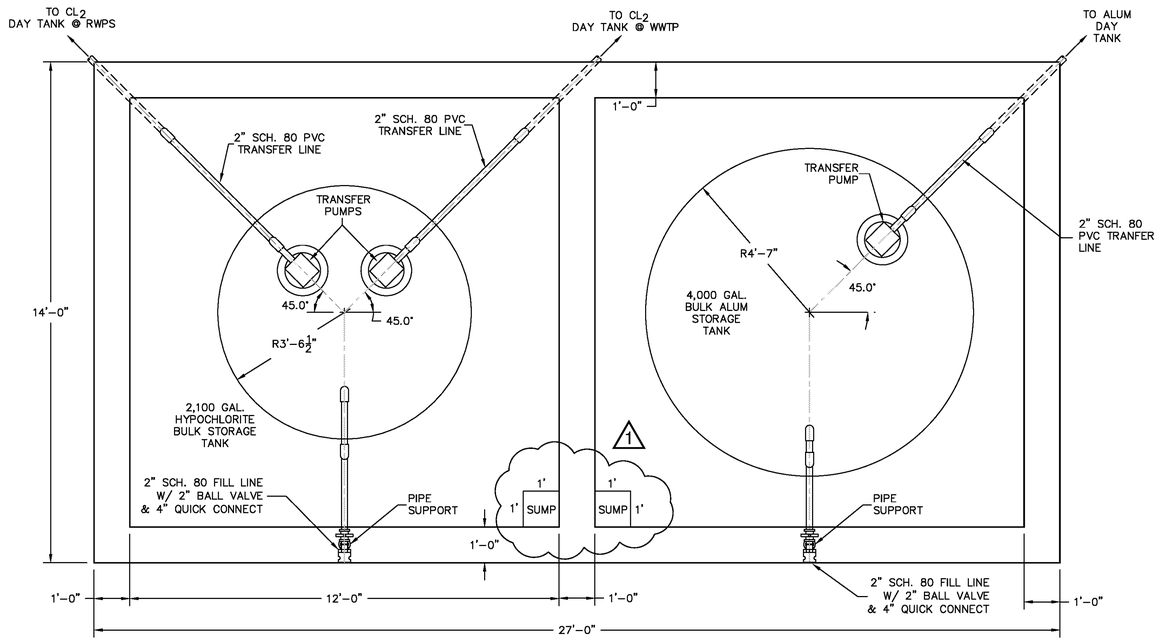

BULK STORAGE TANK PLAN

scale: 1/2" =1'-0"

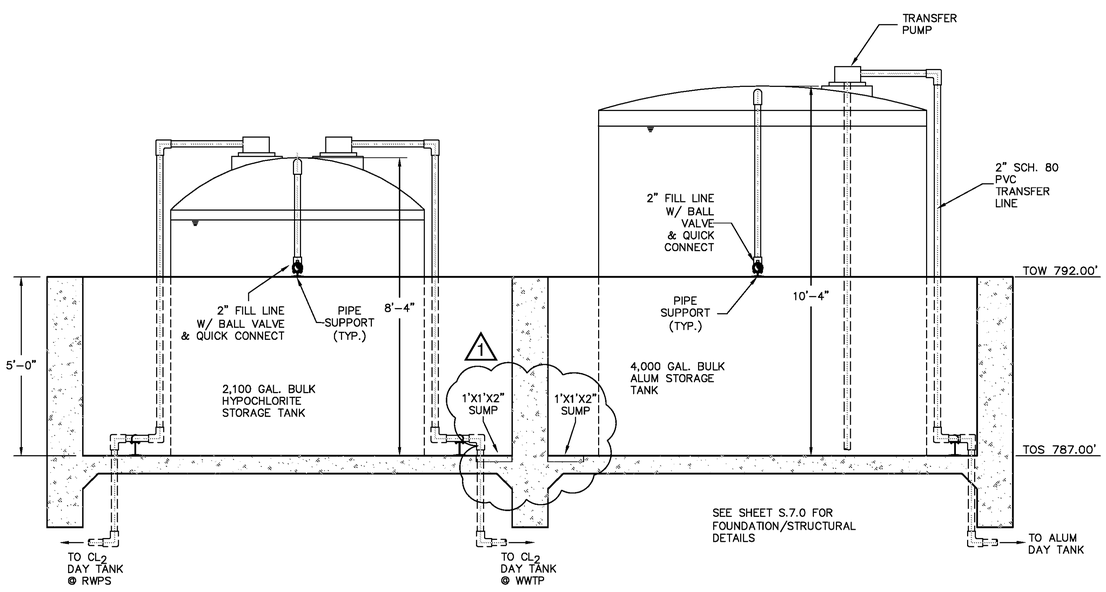

BULK STORAGE TANK ELEV.

scale: 1/2" =1'-0"

CHEM FEED CONTROL SEQUENCE

1. CONTROL SEQUENCES FOR CHLORINE AND ALUM SYSTEMS ARE TO BE IDENTICAL.

2, LOW RANGE BASELINE FEED IS TO BE AUTOMATICALLY ENERGIZED BY LEAD PUMP CONTROL CIRCUIT SIGNAL FROM LIFT STATION #16 AND ONSITE LIFT STATION.

3. HIGH RANGE FEED IS TO BE AUTOMATICALLY ENERGIZED BY LAG PUMP CONTROL CIRCUIT SIGNAL FROM LIFT STATION #16 AND ONSITE LIFT STATION.

NOTES:

1. ALL CHEMICAL FEED PIPING TO BE 1" SCHEDULE 80 PVC PIPE UNLESS NOTED OTHERWISE.
2. SUPPLY A TOTAL OF THREE (3) STENNER 45M5 CHEMICAL FEED PUMPS, WITH THIRD PUMP AS SPARE.
4. DAY TANK TO BE FILLED VIA MOMETARY PUSH BUTTON CONTROL OF TRANSFER PUMP. PUSH BUTTON CONTROL TO BE MOUNTED ON FACE OF PUMP CONTROL PANEL IN CHEMICAL FEE PUMP ROOM.
5. FLOOR, WALLS AND CHEMCIAL CONTAINMENT CURBING IN CONTAINMENT AREA TO BE COATED WITH CHEMICAL RESISTANT EPOXY COATING (SHERWIN WILLIAMS, COR-COTE HCR) TO A WALL/CURB HEIGHT OF 10" ABOVE FINISH FLOOR ELEVATION.

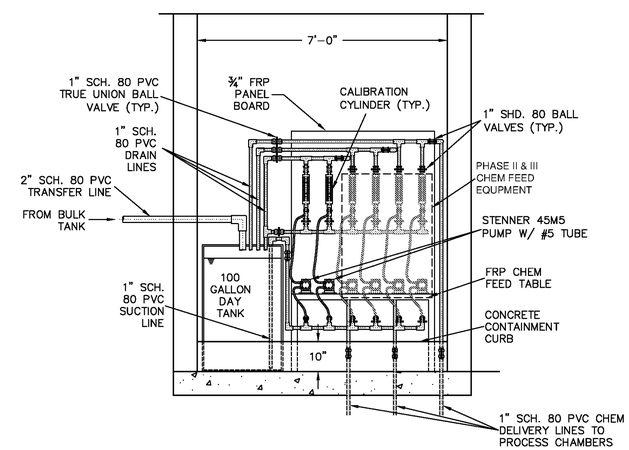

CHEM FEED EQUIP. DETAILS

scale: 1/2" =1'-0"

NOTE: CHEMCIAL FEED EQUIPMENT DETAILS ARE TYPICAL FOR BOTH HYPOCHLORITE AND ALUM FEED SYSTEMS.

STATE OF TEXAS
FRANK T. PHELAN
93874
LICENSED PROFESSIONAL ENGINEER
11/29/13

FRANK T. PHELAN
93874
LICENSED PROFESSIONAL ENGINEER
11/13

Jay Engineering Company, Inc.
P.O. Box 1220
Leander, Texas 78646-1220
Tel.: (512) 259-3226 Fax.: (512) 259-8016
Texas Registered Engineering Firm F-4780

CRYSTAL FALLS WEST - SEC. 1
WRP, OFFSITE LIFT STA. & RECLAIMED WATER PUMP STA.

CHEMICAL FEED AND BULK STORAGE SYSTEM DETAILS

THE LOOKOUT GROUP

SCALE: AS NOTED DWN: JJD DESIGN: FAJ DATE: APRIL 2013
DWG. NO. AS NOTED JOB NO. 157-045-20

no.	date	Revisions	appv.
1	12/13	Added Sump	FTP

Sheet
C.10.0

c:\Projects-Lookout-Group\Crystal-Falls-West_Sec1_WRP_LftSta_PmpSta_044-045-046\Const-Plans_WRP\Xrf-Sat\CFW-Sec1_WRP_Sh-C.10.0_Chlorn-Non-Potbls.dwg

1. HEAT TAPING AND INSULATION OF PUMPS AND PIPING, AS WELL AS PROTECTION AGAINST INTERNAL TANK FREEZING, SHALL BE PROVIDED BY THE INSTALLING CONTRACTOR.

2. THE FILTER CONTROL PANEL IS SHOWN IN THE STANDARD LOCATION. IF THE FILTER IS LOCATED OUTSIDE, THE CONTROL PANEL MAY BE RELOCATED TO THE SIDE OF THE FILTER FACING NORTH, TO LIMIT EXPOSING THE H.M.I. TO DIRECT SUNLIGHT.

3. THE GRAPHIC ELEMENTS OF THIS COMPUTER GENERATED DRAWING ARE DRAWN FULL SIZE. THE DIMENSIONS ARE ASSOCIATIVE. IF THE SIZE OF THE GRAPHIC ELEMENTS IS CHANGED THE DIMENSIONS WILL NOT BE CORRECT.

4. AN INFLUENT VALVE IS REQUIRED FOR ISOLATION / MAINTENCE OF THE FILTER UNIT. THE INFLUENT VALVE SHALL BE PROVIDED BY OTHERS AND INSTALLED BY OTHERS.

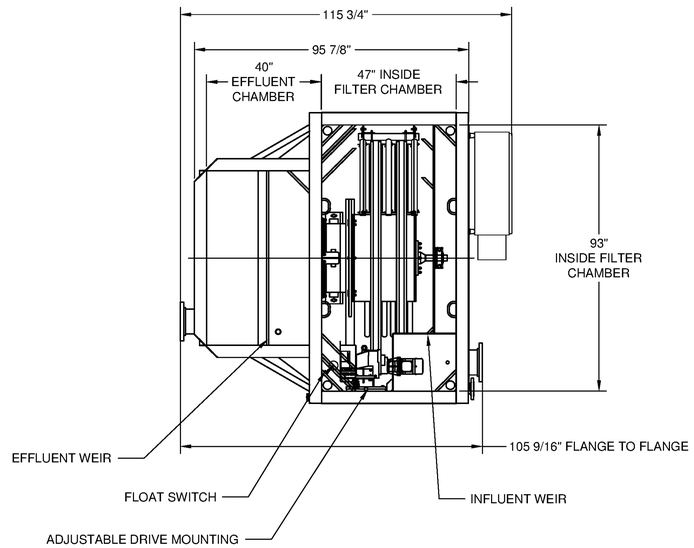

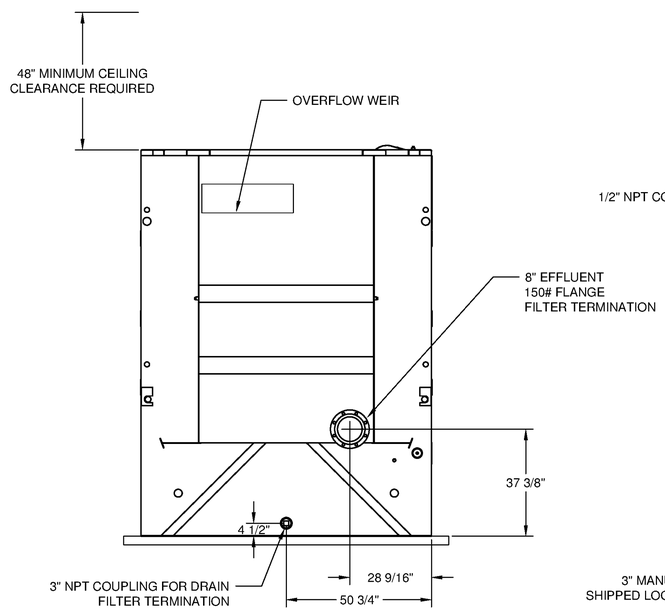

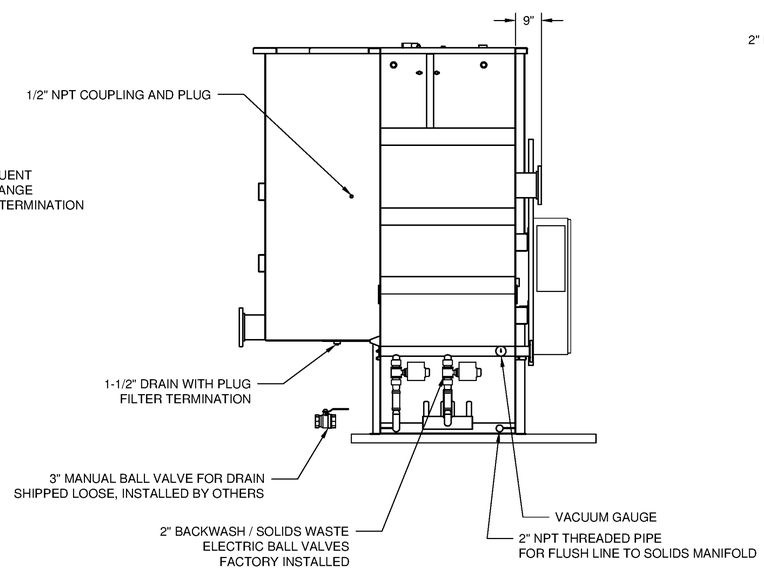

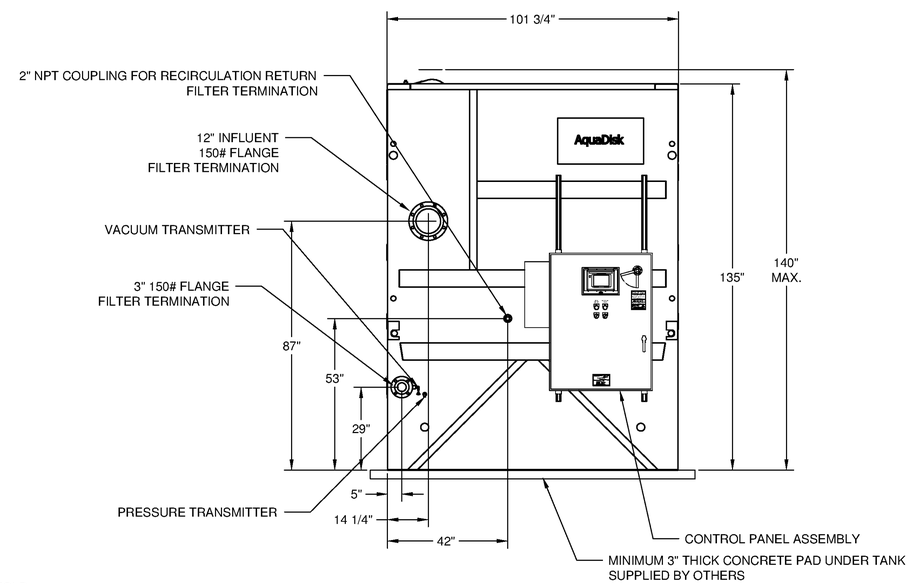

DRY WT (LBS)	OPER. WT. (LBS)
7,500	27,500

FRANK T. PHELAN 93874 LICENSED PROFESSIONAL ENGINEER 6/26/13

Jay Engineering Company, Inc.
P.O. Box 1220
Leander, Texas 78646-1220
Tel: (512) 259-3882 Fax: (512) 259-9016
Texas Registered Engineering Firm F-4780

CRYSTAL FALLS WEST - SEC. 1
WRP, OFFSITE LIFT STA. & RECLAIMED WATER PUMP STA.

FILTER DETAILS

THE LOOKOUT GROUP

SCALE: AS NOTED | DWN: JJO | DESIGN: FAJ | DATE: JUNE 2013
DWG. NO. AS NOTED | JOB NO. 193-030-20

no.	date	Revisions	appv.

Sheet C.11.0

C:\Projects-Lookout-Group\Crystal-Falls-West_Sec1_WRP_LiftSta_PmpSta_044-045-046\Const-Plans_WRP\4th-Set\CFW-Sec1_WRP_Sh-C11.0_Filter-Details1.dwg

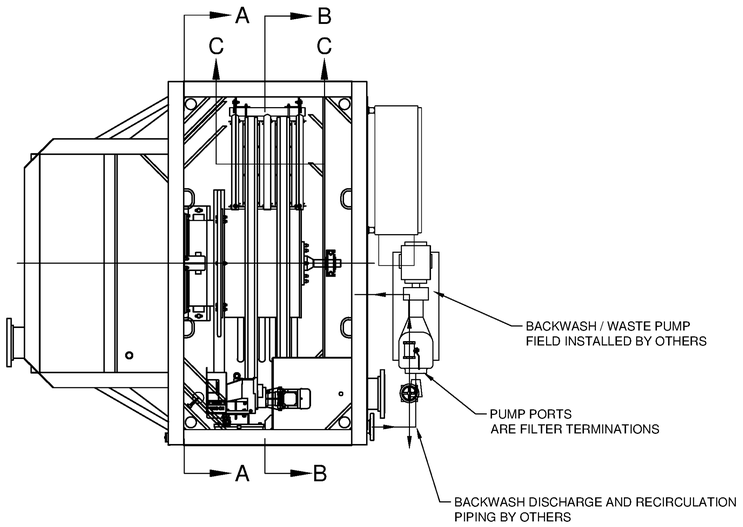

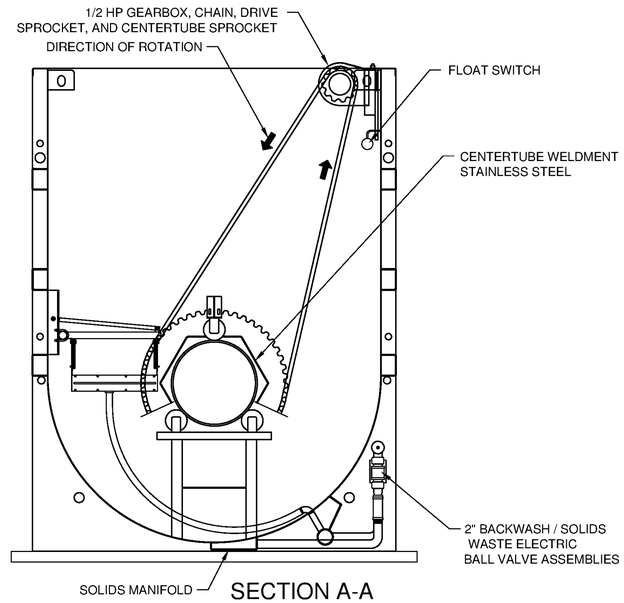

SECTION A-A

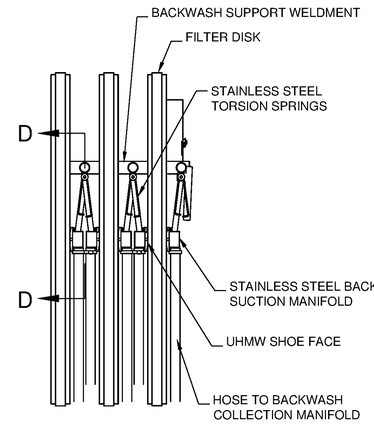

SECTION C-C
NOT TO SCALE

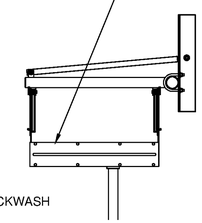

SECTION D-D
NOT TO SCALE

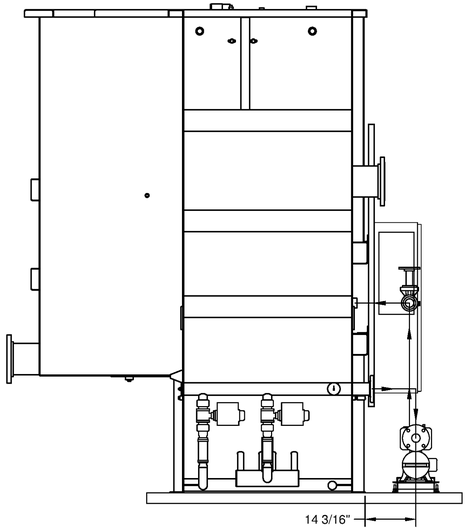

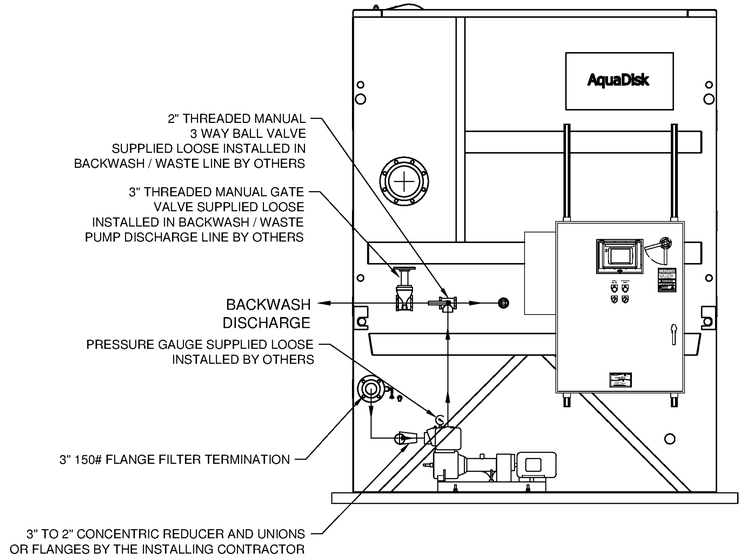

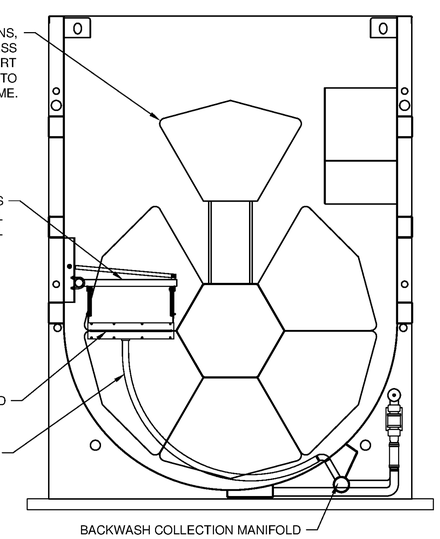

SECTION B-B

1 ALL EXTERNAL PIPING AND FITTINGS SHALL BE PROVIDED BY OTHERS ACTUAL PIPING LAYOUT AND PUMP LOCATION TO BE DETERMINED BY OTHERS WHEN THREADED OR WELDED PIPE IS USED IN LIEU OF FLANGED PIPE, UNIONS SHALL BE USED AT EACH PUMP AND VALVE CONNECTION TO FACILITATE SERVICE.

2 2 H.P. BACKWASH / WASTE PUMP CONNECTIONS ARE 2" N.P.T. BACKWASH / WASTE PIPING IS 3" DIAMETER. 3" TO 2" CONCENTRIC REDUCER FITTINGS SHALL BE PROVIDED AND INSTALLED BY OTHERS AT EACH PUMP PORT.

3 THE STANDARD BACKWASH / WASTE PUMP PROVIDES 23.2 FEET OF TOTAL HEAD AT A FLOW RATE OF 130 GPM. THE SUCTION SIDE PIPING REQUIRES APPROXIMATELY 11 FEET OF THIS HEAD. THIS LEAVES APPROXIMATELY 12 FEET (5 PSIG) FOR THE DISCHARGE SIDE. THE DISCHARGE DIAMETER, EQUIVALENT LENGTH, AND VERTICAL LIFT MUST RESULT IN A HEAD LOSS LESS THAN 12 FEET. INSTALLATIONS WITH MORE THAN ONE BACKWASH / WASTE PUMP MUST ACCOMODATE ALL BACKWASH / WASTE PUMPS RUNNING SIMULTANEOUSLY WITHOUT EXCEEDING 12 FEET OF DISCHARGE HEAD.

FOR INSTALLATIONS THAT REQUIRE MORE DISCHARGE HEAD, ALTERNATIVE PUMPS ARE AVAILABLE. PLEASE CONSULT AASI ENGINEERING TO VERIFY THE SUITABILITY OF THE DISCHARGE PIPING OR FOR SPECIAL PUMP REQUIREMENTS.

Jay Engineering Company, Inc.
P.O. Box 1220
Leander, Texas 78646-1220
Tel. (512) 259-3882 Fax. (512) 259-8016
Texas Registered Engineering Firm F-4780

CRYSTAL FALLS WEST - SEC. 1
WRP, OFFSITE LIFT STA. & RECLAIMED WATER PUMP STA.

FILTER DETAILS

THE LOOKOUT GROUP

SCALE: AS NOTED DWN: JJD DESIGN: FAJ DATE: APRIL 2013
DWG. NO. AS NOTED JOB NO. 157-045-20

no.	date	Revisions	appv.

Sheet
C.12.0

C:\Projects-Lookout-Group\Crystal-Falls-West_Sec1_WRP_LftSta_PropSio_04-045-04A\Const-Plans_WRP\Jrd-Set\CFW-Sec1_WRP_Sh-C12.0_Filter-Details2.dwg

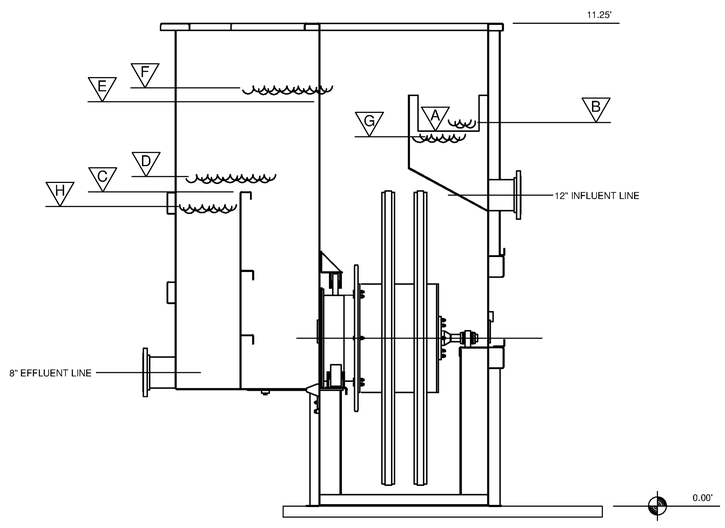

HYDRAULIC PROFILE
BASED UPON AVERAGE FLOW RATE OF 3.25 GPM PER SQUARE FOOT (0.5 MGD)
BASED UPON MAXIMUM FLOW RATE OF 6.5 GPM PER SQUARE FOOT (1.0 MGD)

ELEVATION

A	8.74'	INFLUENT WEIR ELEVATION
B	9.04'	NAPPE OVER INFLUENT WEIR AVERAGE FLOW
	9.21'	NAPPE OVER INFLUENT WEIR MAXIMUM FLOW
C	7.32'	EFFLUENT WEIR ELEVATION
D	7.45'	NAPPE OVER EFFLUENT WEIR AVERAGE FLOW
	7.53'	NAPPE OVER EFFLUENT WEIR MAXIMUM FLOW
E	9.42'	OVERFLOW WEIR ELEVATION
F	9.61'	NAPPE OVER OVERFLOW WEIR AVERAGE FLOW
	9.73'	NAPPE OVER OVERFLOW WEIR MAXIMUM FLOW
G	8.70'	BACKWASH INITIATE LEVEL
H	6.82'	MAXIMUM AVAILABLE LIQUID LEVEL FOR EFFLUENT CONVEYANCE

WEIR LENGTHS
INFLUENT = 1.42'
EFFLUENT = 5.08'
OVERFLOW = 2.67'

NOTE:
EFFLUENT WEIR TO BE CALIBRATED FOR FLOW MEASREMENT. FILTER TO CONTAIN STAFF GAUGE MOUNTED IN SUITABLE LOCATION FOR VISUAL OBSERVATION OF FLOW RATE MEASUREMENT.

STATE OF TEXAS
FRANK T. PHELAN
93874
PROFESSIONAL ENGINEER
5/3/13

Jay Engineering Company, Inc.
P.O. Box 1220
Leander, Texas 78646-1220
Tel.: (512) 259-3882 Fax.: (512) 259-8016
Texas Registered Engineering Firm F-4780

CRYSTAL FALLS WEST - SEC. 1
WRP, OFFSITE LIFT STA. & RECLAIMED WATER PUMP STA.

FILTER DETAILS

THE LOOKOUT GROUP

SCALE: AS NOTED DWN: JJD DESIGN: FAJ DATE: APRIL 2013
DWG. NO. AS NOTED JOB NO. 157-045-20

No.	date	Revisions	dpx

Sheet
C.13.0

C:\Projects-Lookout-Group\Crystal-Falls-West_Sec1_WRP_LIFSTA_PmpStn_044-045-046\Const-Plans_WRP\3rd-Set\CFW-Sec1_WRP_Sh-C13.0_Filter-Details3.dwg

SYMBOL KEY

	MOTOR		CIRCUIT BREAKER		ELECTRICAL DISCONNECT	VFD	VARIABLE FREQUENCY DRIVE		TRANSDUCER		STARTER CONTACTOR
M	MOTOR OPERATED VALVE		TRANSFORMER		MOTOR OVERLOAD	P	PNEUMATIC OPERATED VALVE		FUSE		FLOAT SWITCH

NOTE: SOME SYMBOLS MAY NOT BE APPLICABLE

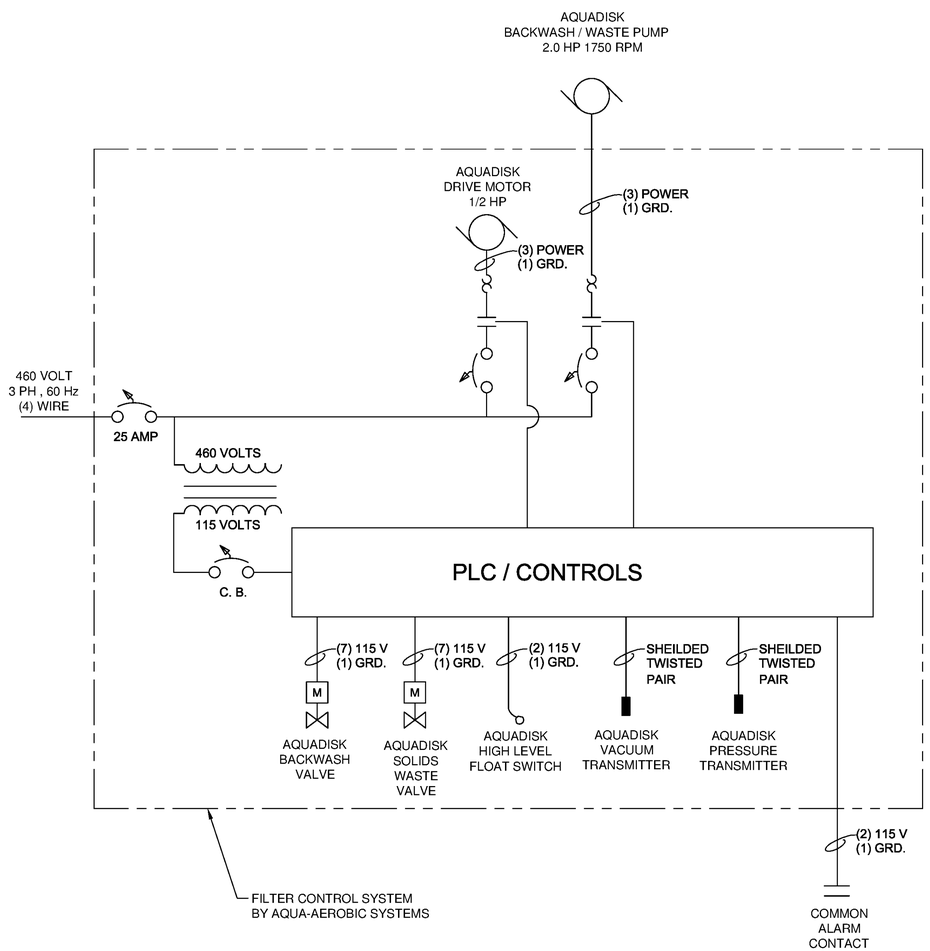

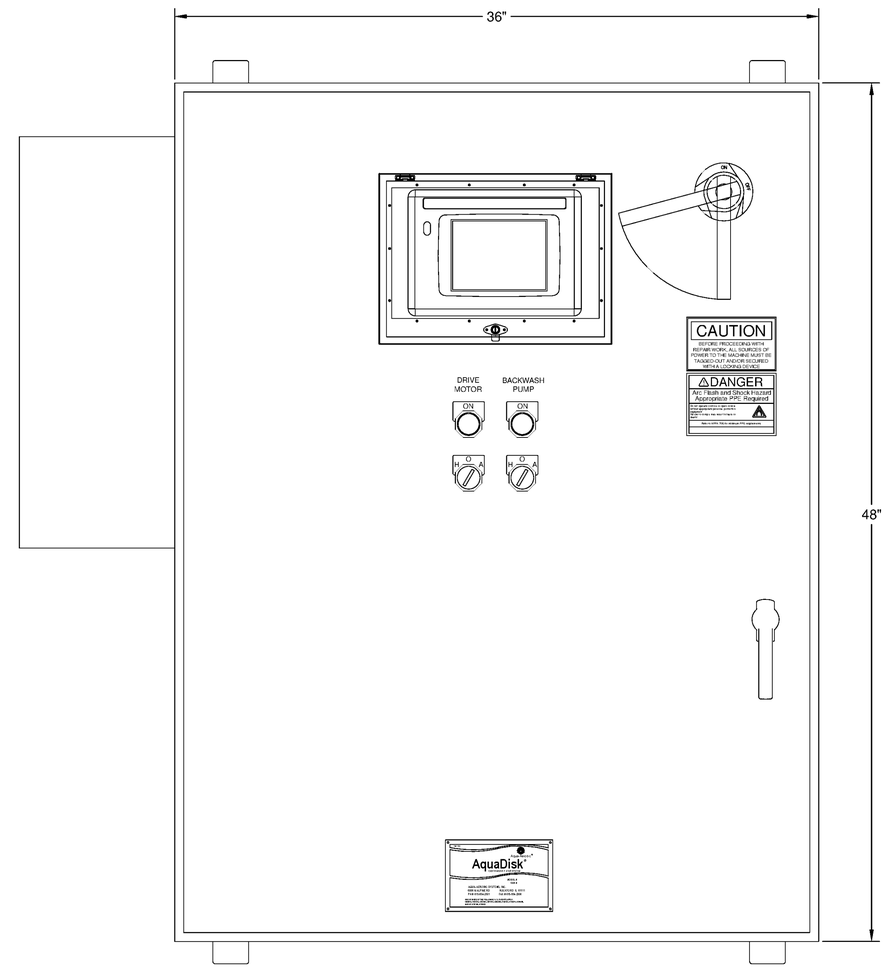

1 CONTROL PANEL
ENCLOSURE NEMA 4X WALL MOUNTED TYPE STAINLESS STEEL
FACTORY ASSEMBLED ON THE FILTER, DISASSEMBLED AND SHIPPED LOOSE.
REASSEMBLED ON-SITE BY CONTRACTOR.
IF THE FILTER IS LOCATED OUTSIDE, THE CONTROL PANEL
MAY BE RELOCATED TO THE SIDE OF THE FILTER
FACING NORTH TO LIMIT THE H.M.I. EXPOSURE TO DIRECT SUNLIGHT.

2 CONTROL PANEL SIZE
48" HEIGHT X 36" WIDE X 12" DEEP

3 (1) CONTROL PANEL PER FILTER

FRANK T. PHELAN
93874
LICENSED
PROFESSIONAL ENGINEER
9/16/13

Jay Engineering Company, Inc.
P.O. Box 1220
Leander, Texas 78646-1220
Tel: (512) 259-3882 Fax: (512) 259-9016
Texas Registered Engineering Firm F-4780

CRYSTAL FALLS WEST - SEC. 1
WRP - OFFSITE LIFT STA. & RECLAIMED WATER PUMP STA.

FILTER DETAILS

THE LOOKOUT GROUP

SCALE: AS NOTED | DWN: JJD | DESIGN: FAJ | DATE: APRIL 2013
DWG. NO. AS NOTED | JOB NO. 157-045-20

no.	date	Revisions	appv.

Sheet
C.14.0

C:\Projects-Lookout-Group\Crystal-Falls-West_Sec1_WRP_LftStn_PropStn_044-045-046\Const-Plans_WRP\3rd-Set\CFW-Sec1_WRP_Sh-C.14.0_Filter-Details4.dwg

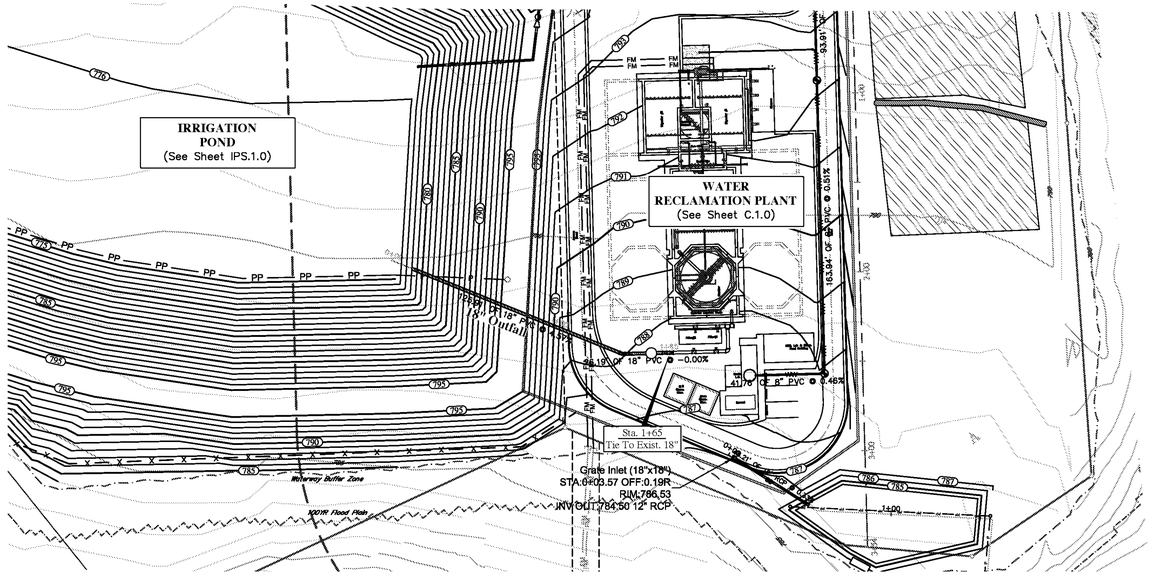

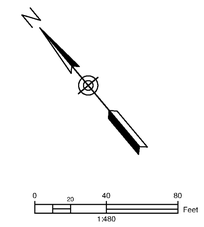

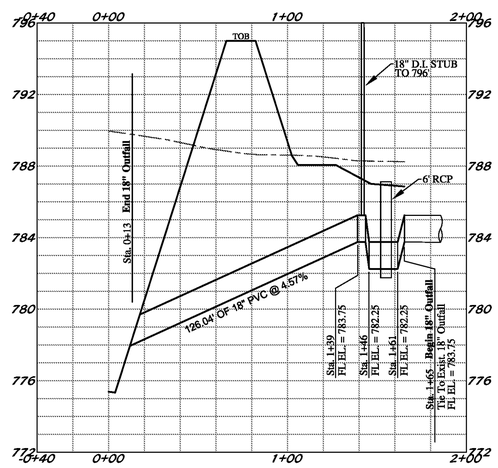

NOTES:

1. CONTRACTOR TO SUPPLY FULLY FUNCTIONAL EFFLUENT METER.
2. EFFLUENT METER TO PROVIDE TOTALIZED AND INSTANTANEOUS FLOWS AT CONTROLLER MOUNTED IN MCC/LAB BUILDING AND TO SCADA SYSTEM.
3. METER TO BE PANAMETRICS AT86B.
4. CONDUIT AND CABLES FOR METERING TO BE PER MFR., CITY OF LEANDER AND NEC (LATEST EDITION).

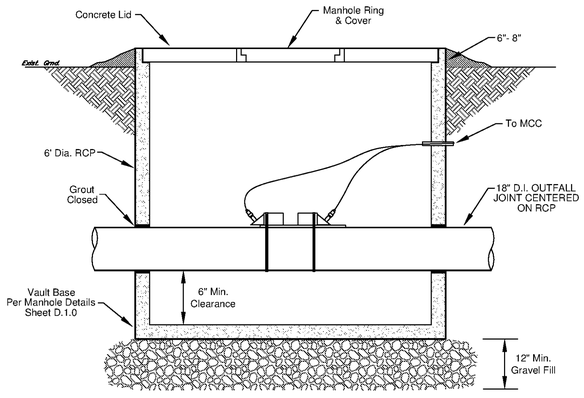

EFFLUENT METER VAULT DETAIL

N.T.S.

STATE OF TEXAS
FRANK T. PHELAN
93874
LICENSED
PROFESSIONAL ENGINEER
5/13/13

Jay Engineering Company, Inc.
P.O. Box 1220
Lakeway, Texas 78646-1220
Tel: (512) 259-3882 Fax: (512) 259-8016
Texas Registered Engineering Firm F-4780

CRYSTAL FALLS WEST - SEC. 1
WRP, OFFSITE LIFT STA. & RECLAIMED WATER PUMP STA.

OUTFALL PLAN & PROFILE

THE LOOKOUT GROUP

SCALE: AS NOTED DWN: JJD DESIGN: FAJ DATE: APRIL 2013
DWG. NO. AS NOTED JOB NO. 157-045-20

no.	date	Revisions	appr.

Sheet
C.15.0

C:\Projects-Lookout-Group\Crystal-Falls-West_Sec1_WRP_LiftSta_PumpSta_044-045-046\Const-Plans_WRP\Jxd-Set\CFW-Sec1_WRP_Sh-C15.0_Outfall-PAP.dwg

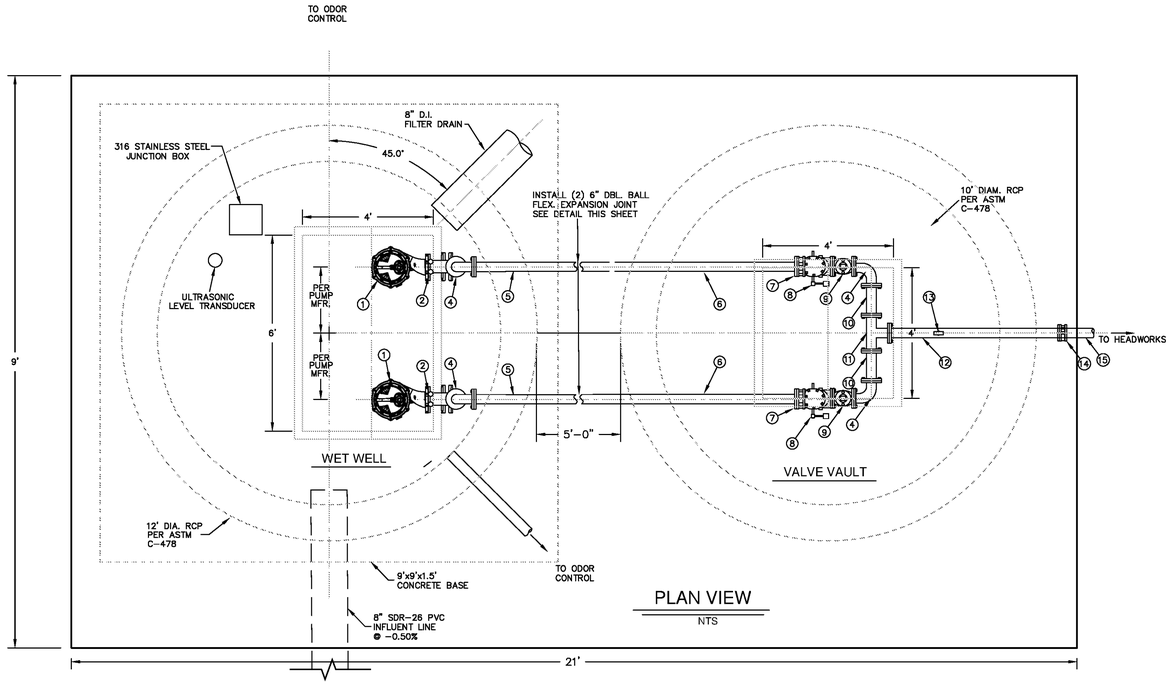

PLAN VIEW

NTS

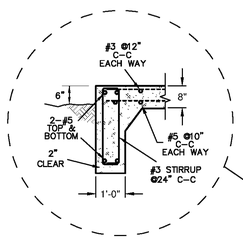

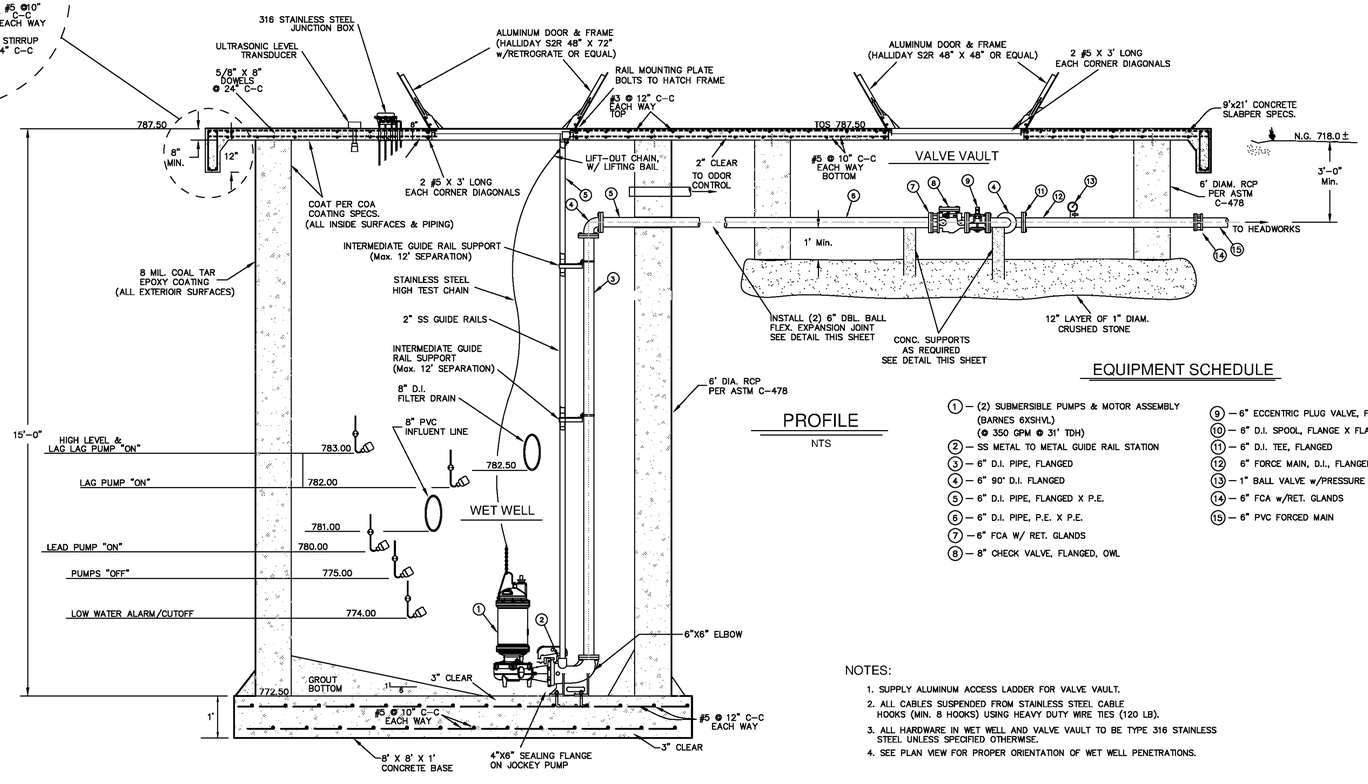

PROFILE

NTS

EQUIPMENT SCHEDULE

1. — (2) SUBMERSIBLE PUMPS & MOTOR ASSEMBLY (BARNES 6XSHVL) (@ 350 GPM @ 31' TDH)
2. — SS METAL TO METAL GUIDE RAIL STATION
3. — 6" D.I. PIPE, FLANGED
4. — 6" 90° D.I. FLANGED
5. — 6" D.I. PIPE, FLANGED X P.E.
6. — 6" D.I. PIPE, P.E. X P.E.
7. — 6" FCA W/ RET. GLANDS
8. — 8" CHECK VALVE, FLANGED, OWL
9. — 6" ECCENTRIC PLUG VALVE, FLANGED
10. — 6" D.I. SPOOL, FLANGE X FLANGE
11. — 6" D.I. TEE, FLANGED
12. 6" FORCE MAIN, D.I., FLANGED
13. — 1" BALL VALVE w/PRESSURE GAUGE (0-30 PSI)
14. — 6" FCA w/RET. GLANDS
15. — 6" PVC FORCED MAIN

NOTES:

1. SUPPLY ALUMINUM ACCESS LADDER FOR VALVE VAULT.
2. ALL CABLES SUSPENDED FROM STAINLESS STEEL CABLE HOOKS (MIN. 8 HOOKS) USING HEAVY DUTY WIRE TIES (120 LB).
3. ALL HARDWARE IN WET WELL AND VALVE VAULT TO BE TYPE 316 STAINLESS STEEL UNLESS SPECIFIED OTHERWISE.
4. SEE PLAN VIEW FOR PROPER ORIENTATION OF WET WELL PENETRATIONS.

GENERAL NOTES:

1. MANUFACTURER OF TREATMENT EQUIPMENT SHALL BE RESPONSIBLE FOR ADEQUATE SIZING OF GATES, PIPES, WEIRS AND OPENINGS TO PASS FLOWS REQUIRED AND AS SHOWN IN HYDRAULIC PROFILE OR SPECIFICATIONS.
2. ALL HOSE BIBS SHALL BE ⅝" UNLESS OTHERWISE STATED. VACUUM BREAKERS TO BE INSTALLED ON ALL HOSE BIBS.
3. ALL EXPOSED NON-POTABLE WATER PIPING SHALL BE COLOR-CODED AND SIGNED PER TCEQ RULES.
4. WALKWAYS AND STAIRS TO HAVE KICK PLATES PER OSHA REQUIREMENTS (TYP. ALL WALKWAYS AND STAIRS)
5. ODOR CONTROLS PER DETAILS SHEET XX.

STRUCTURAL NOTES

1. BACKFILL WET WELL WITH APPROVED GRANULAR MATERIAL HAVING A PI BETWEEN 4 &15. COMPACT IN 12" LIFTS.
2. COMPACT STRUCTURAL FILL IN 8" LIFTS TO 95% MAX. DENSITY PER TEX 113-E. MOISTURE CONTENT WITHIN 2% OPTIMUM, PER STANDARD PROCTOR(ASTM D 698).
3. THE TOP 24" OF FILL TO BE LOW PERMEABILITY, LOW PLASTICITY FILL.

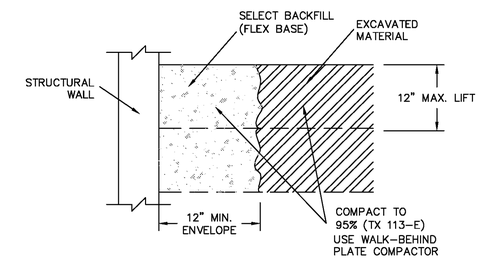

BACKFILL DETAIL

(ALL WET WELLS, TYP.)

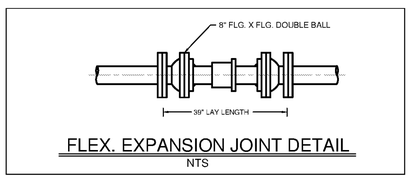

FLEX. EXPANSION JOINT DETAIL

NTS

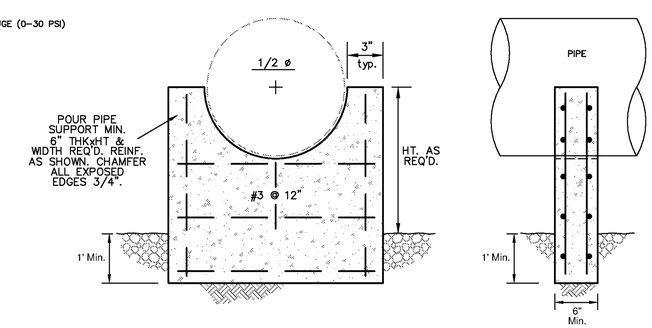

CONC. SUPPORT

Jay Engineering Company, Inc.
P.O. Box 1220
Leander, Texas 78646-1220
Tel: (512) 259-3882 Fax: (512) 259-8016
Texas Registered Engineering Firm F-4780

CRYSTAL FALLS WEST - SEC. 1
WRP, OFFSITE LIFT STA. & RECLAIMED WATER PUMP STA.

ON-SITE LIFT STATION #17
PLAN & PROFILE

THE LOOKOUT GROUP

SCALE: AS NOTED | DWN: JJD | DESIGN: FAJ | DATE: APRIL 2013
DWG. NO. AS NOTED | JOB NO. 157-045-20

No.	date	Revisions	opv.

Sheet

C.16.0

C:\Projects-Lookout-Group\Crystal-Falls-West_Sec1_WRP_LiftSta_PropSta_044-045-046\Const-Plans_WRP\4th-Set\CFW-Sec1_WRP_Sh-C16.0_On-site-Lift-Sta-P&P.dwg

NOTES:

1. MANUFACTURER OF TREATMENT EQUIPMENT SHALL BE RESPOSIBLE FOR ADEQUATE SIZING OF GATES, PIPES, WEIRS AND OPENINGS TO PASS FLOWS REQUIRED AND AS SHOWN IN HYDRAULIC PROFILE OR SPECIFICATIONS.

2. ALL HOSE BIBS SHALL BE ⅝" UNLESS OTHERWISE STATED. VACUUM BREAKERS TO BE INSTALLED ON ALL HOSE BIBS.

3. ALL EXPOSED NON-POTABLE WATER PIPING SHALL BE COLOR-CODED AND SIGNED PER TCEQ RULES.

4. WALKWAYS AND STAIRS TO HAVE KICK PLATES PER OSHA REQUIREMENTS (TYP. ALL WALKWAYS AND STAIRS)

NOTES:
1. SEE YARD PIPING PLAN SHEET FOR CHEMICAL FEED LINE DETAILS.

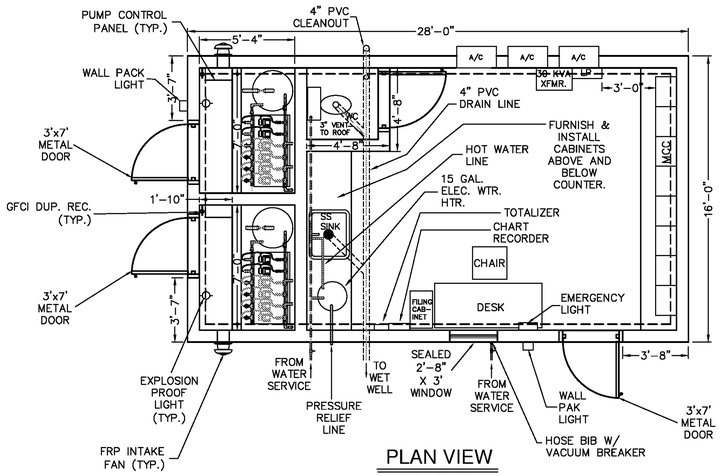

PLAN VIEW

SCALE: 3/8"=1'-0"

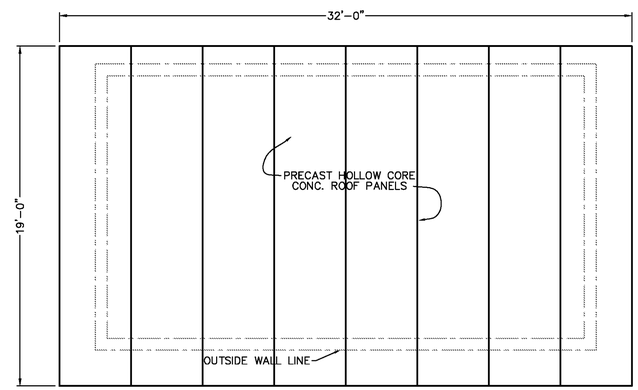

ROOF PLAN

SCALE: 3/8"=1'-0"

ROOF PANEL NOTES:

1. GROUT BETWEEN PANELS PER MFR. SPECS.
2. GROUT AND WIPE EDGES OF ROOFING PANELS PER MFR. SPECS.
3. FLASHING SHALL BE INSTALLED AROUND OUTSIDE EDGES WITH FISHTAIL FACIA.
4. ACHIEVE ¼" PER FOOT SLOPE W/ TAPERED INSULATIONTON.
5. ROOFING SYSTEM TO BE HEAT-WELDED, REINFORCED TPO MEMBRANE, 60 MIL, GENFLEX OR APPROVED EQUAL INSTALLED PER MFR. SPECS.
4. SEE SHEET S.6.0 FOR ROOF STRUCTURAL.

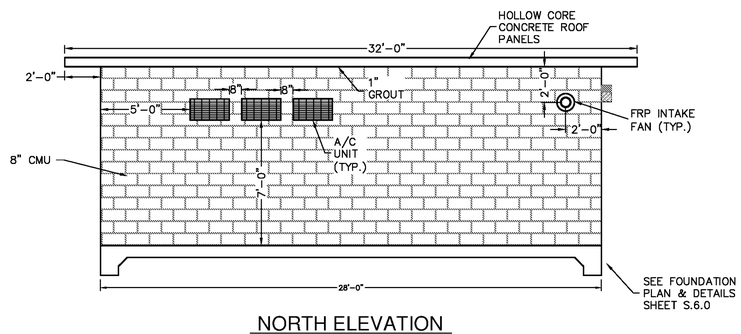

NORTH ELEVATION

SCALE: 3/8"=1'-0"

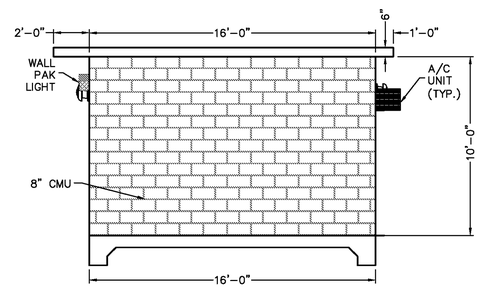

EAST ELEVATION

SCALE: 3/8"=1'-0"

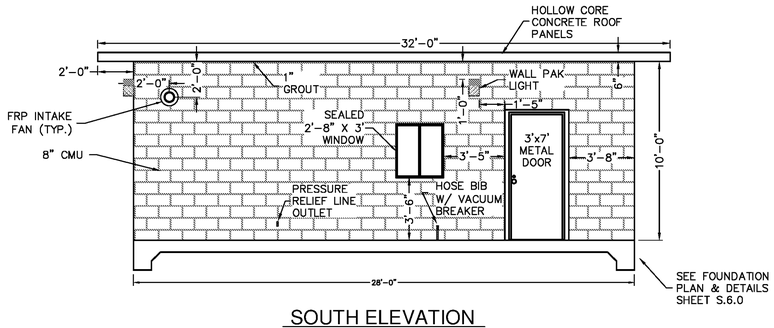

SOUTH ELEVATION

SCALE: 3/8"=1'-0"

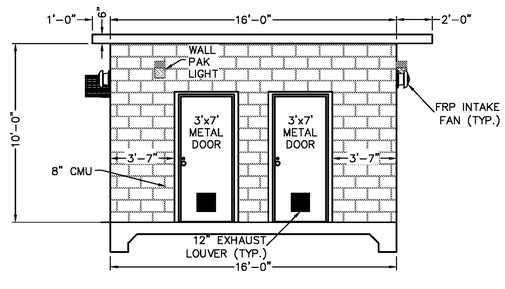

WEST ELEVATION

SCALE: 3/8"=1'-0"

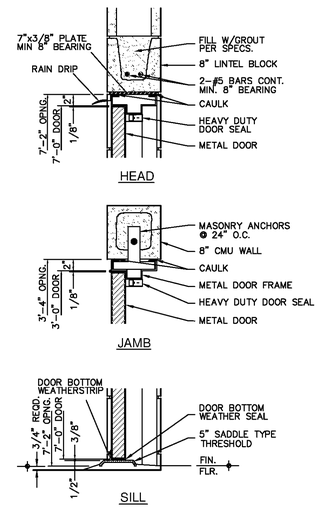

EXTERIOR DOOR DETAILS

NO SCALE

NOTES:

1. ALL ABOVE-GROUND NON-POTABLE WATER LINE SYSTEMS (EXCEPT CHLORINE SOLUTION DELIVERY LINE) TO BE H.D.G. STEEL, SCH. 40 THREADED FITTING PIPE, INSULATED PER SPECIFICATIONS. CHLORINE SOLUTION DELIVERY LINE TO BE 1" SCH. 80 PVC, INSULATED PER SPECIFICATIONS.

2. CMU SHALL BE SPLIT FACED WITH INTEGRAL COLORING AND WATERPROOFING.

Jay Engineering Company, Inc.
P.O. Box 1220
Leander, Texas 78646-1220
Tel: (512) 259-3882 Fax: (512) 259-9016
Texas Registered Engineering Firm F-4780

CRYSTAL FALLS WEST - SEC. 1
WRP, OFFSITE LIFT STA. & RECLAIMED WATER PUMP STA.

LAB/MCC BUILDING & ELEVATIONS

THE LOOKOUT GROUP

SCALE: AS NOTED DWN: JJD DESIGN: FAJ DATE: APRIL 2013
DWG. NO. AS NOTED JOB NO. 157-045-20

no.	date	Revisions	appv.

Sheet C.17.0

FRANK T. PHELAN 93874 LICENSED PROFESSIONAL ENGINEER TEXAS 5/9/13

C:\Projects-Lookout-Group\Crystal-Falls-West_Sec1_WRP_LiftSta_PmpSta_044-045-046\Const-Plans_WRP\Xrf-Set\CFW-Sec1_WRP_Sh-C17.0_Lab-MCC-Bldg-Elevs.dwg

NOTES:

1. MANUFACTURER OF TREATMENT EQUIPMENT SHALL BE RESPOSIBLE FOR ADEQUATE SIZING OF GATES, PIPES, WEIRS AND OPENINGS TO PASS FLOWS REQUIRED AND AS SHOWN IN HYDRAULIC PROFILE OR SPECIFICATIONS.

2. ALL HOSE BIBS SHALL BE ⅝" UNLESS OTHERWISE STATED. VACUUM BREAKERS TO BE INSTALLED ON ALL HOSE BIBS.

3. ALL EXPOSED NON-POTABLE WATER PIPING SHALL BE COLOR-CODED AND SIGNED PER TCEQ RULES.

4. WALKWAYS AND STAIRS TO HAVE KICK PLATES PER OSHA REQUIREMENTS (TYP. ALL WALKWAYS AND STAIRS)

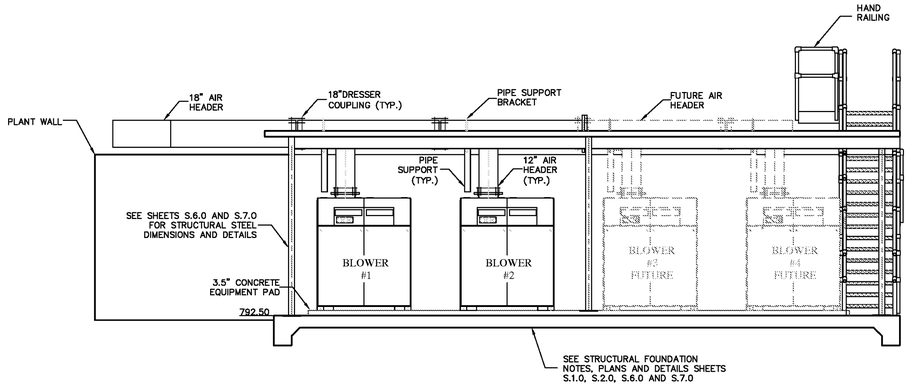

BLOWER SHELTER SOUTH ELEVATION

SCALE: 1/4"=1'-0"

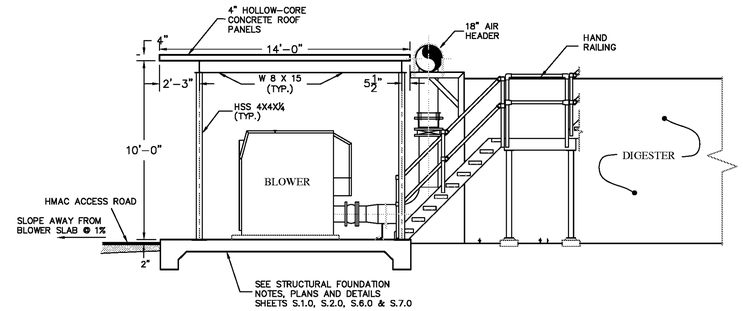

BLOWER SHELTER EAST ELEVATION

SCALE: 1/4"=1'-0"

BLOWER SHELTER NOTES:

1. SOUTHERN ELEVATION TO BE ENCLOSED WITH 8' TALL PRIVACY FENCE GATES, (2) SETS, MOUNTED TO STRUCTURAL STEEL, BOTTOM ON GATES TO BE 3" ABOVE TOS. FENCE LATCH NOT REQUIRED. 1" DROP PINS MOUNTED TO EXTERIOR. SEE SHEET OSLS.6.0 FOR DETAILS.

2. EAST ELEVATION TO BE ENCLOSED WITH 8' TALL PRIVACY FENCE, MOUNTED TO STRUCTURAL STEEL. BOTTOM OF FENCE TO BE 3" ABOVE TOS. SEE SHEET OSLS.6.0 FOR DETAILS.

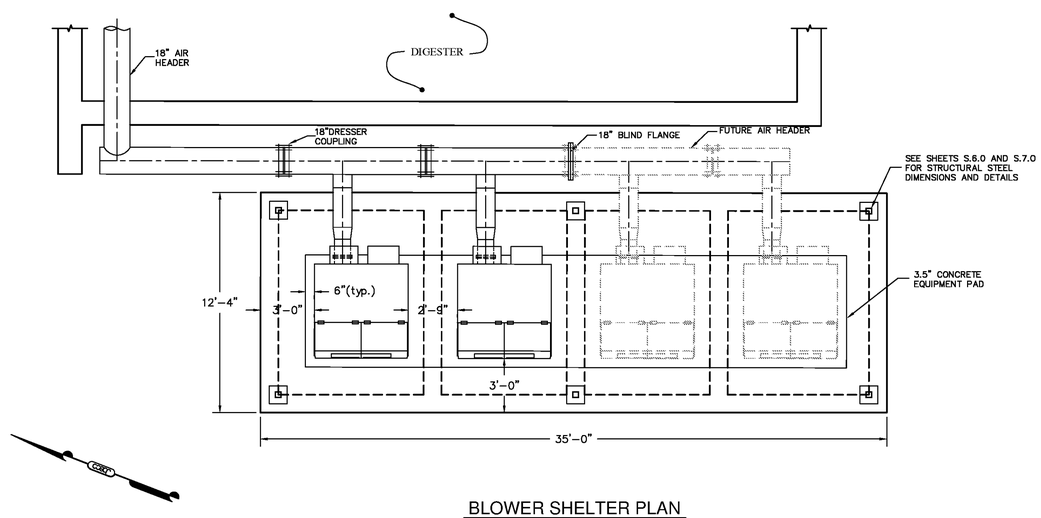

BLOWER SHELTER PLAN

SCALE: 1/4"=1'-0"

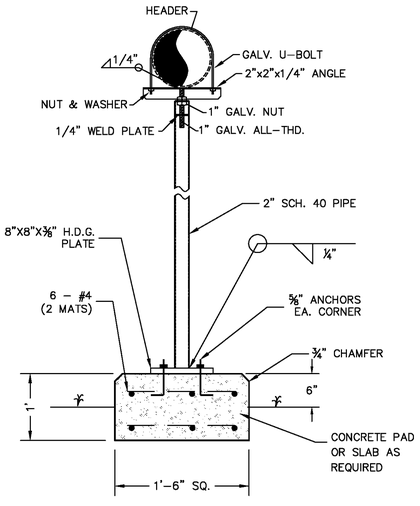

PIPE SUPPORT DETAIL

N.T.S.

FRANK T. PHELAN 93874 PROFESSIONAL ENGINEER 5/3/13

Jay Engineering Company, Inc.
P.O. Box 1220
Leander, Texas 78646-1220
Tel. (512) 259-3882 Fax. (512) 259-8016
Texas Registered Engineering Firm F-4780

CRYSTAL FALLS WEST - SEC. 1
WRP, OFFSITE LIFT STA. & RECLAIMED WATER PUMP STA.

BLOWER SHELTER PLANS & ELEVATIONS

THE LOOKOUT GROUP

SCALE: AS NOTED DWN: JJD DESIGN: FAJ DATE: APRIL 2013
DWG. NO. AS NOTED JOB NO. 157-045-20

No.	date	Revisions	copy

Sheet

C.18.0

C:\Projects-Lookout-Group\Crystal-Falls-West_Sec1_WRP_LftSta_PmpSta_044-045-046\Const-Plans_WRP\3rd-Set\CFW-Sec1_WRP_Sh-C.18.0_Blower-Shelter-Plan-Elev.dwg

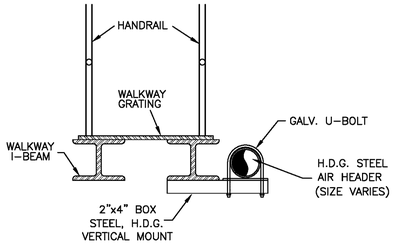

PIPE SUPPORT DETAIL

NTS

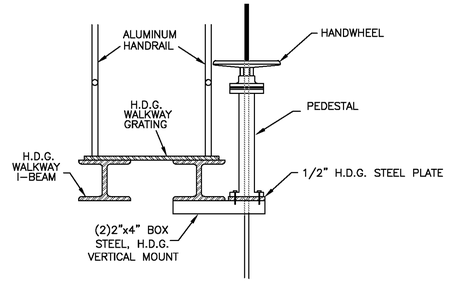

VALVE OPERATOR MOUNTING DETAIL

NTS

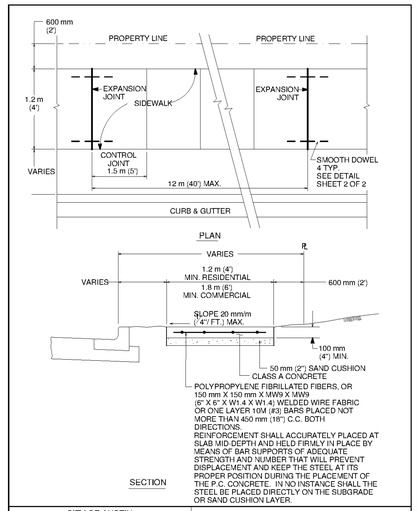

CITY OF AUSTIN DEPARTMENT OF PUBLIC WORKS		SIDEWALK	
RECORD COPY SIGNED BY BILL GARDNER	03/26/08 ADOPTED	THE ARCHITECT/ENGINEER ASSUMES RESPONSIBILITY FOR APPROPRIATE USE OF THIS STANDARD.	STANDARD NO. 432S-1 1 OF 3

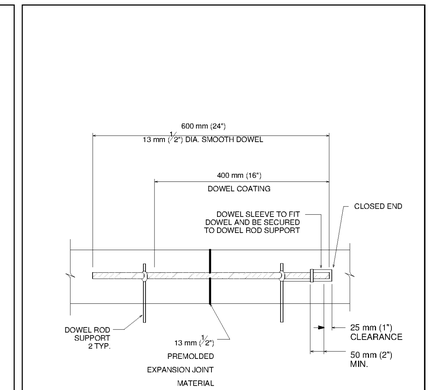

CITY OF AUSTIN DEPARTMENT OF PUBLIC WORKS		SIDEWALK	
RECORD COPY SIGNED BY BILL GARDNER	03/26/08 ADOPTED	THE ARCHITECT/ENGINEER ASSUMES RESPONSIBILITY FOR APPROPRIATE USE OF THIS STANDARD.	STANDARD NO. 432S-1 2 OF 3

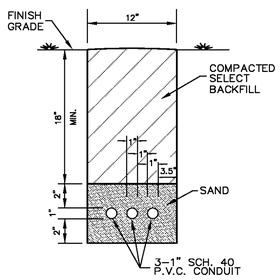

CONDUIT TRENCH DETAIL

not to scale

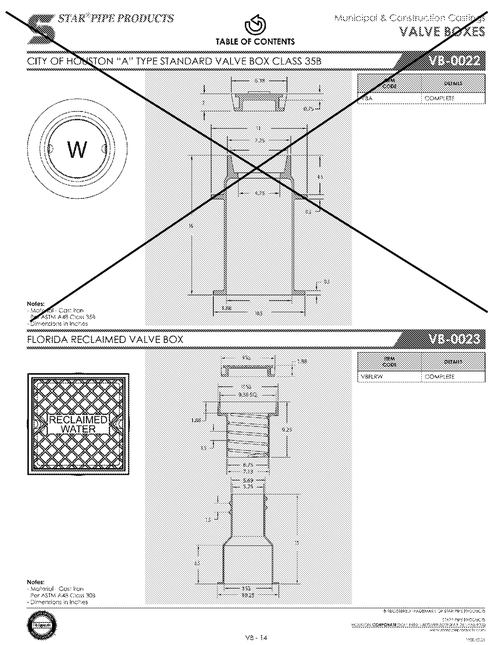

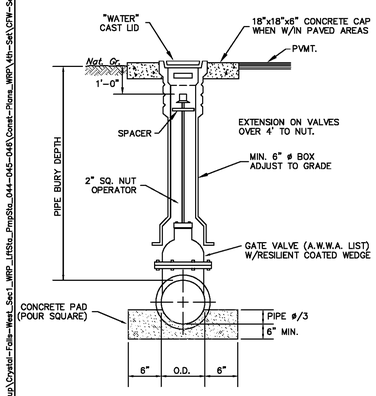

STANDARD GATE VALVE

NTS

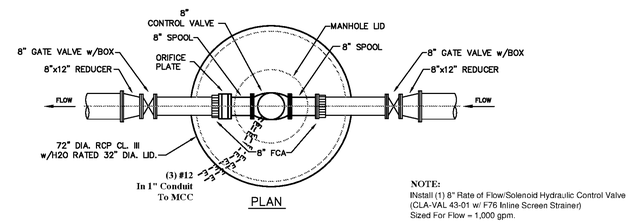

NOTE:
Install (1) 8" Rate of Flow/Solenoid Hydraulic Control Valve (CLA-VAL 43-01 w/ F76 Inline Screen Strainer) Sized For Flow = 1,000 gpm.

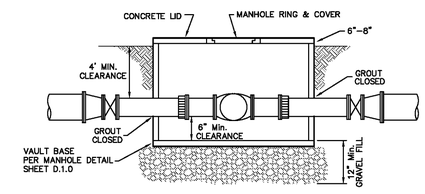

NOTES:

1. GATE VALVES TO HAVE D.I. VALVE BOX & COVER PER DETAIL THIS SHEET.

HYDRAULIC CONTROL VALVE & VAULT

not to scale

Jay Engineering Company, Inc.
P.O. Box 220
Leander, Texas 78646-1220
Tel. (512) 259-3882 Fax. (512) 259-8016
Texas Registered Engineering Firm F-4780

CRYSTAL FALLS WEST - SEC. 1
WRP, OFFSITE LIFT STA. & RECLAIMED WATER PUMP STA.

MISC. CONSTRUCTION DETAILS

THE LOOKOUT GROUP

SCALE: AS NOTED DWN: JJD DESIGN: FAJ DATE: APRIL 2013
DWG. NO. AS NOTED JOB NO. 157-045-20

no.	date	Revisions	copy

Sheet
C.19.0

C:\Projects-Lookout-Group\Crystal-Falls-West_Sec1_WRP_LftSta_PmpSta_044-045-046\Const-Plans_WRP\4th-Set\CFW-Sec1_WRP_Sh-C.19.0_Misc-Const-Details1_rev-072813.dwg

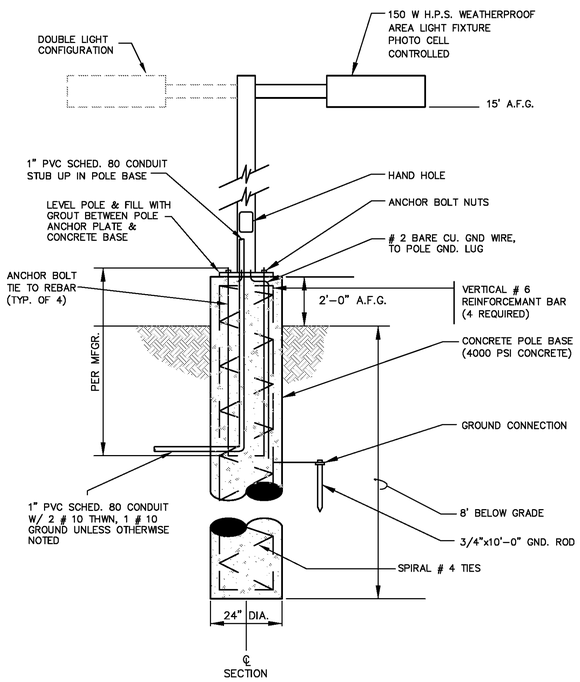

AREA LIGHTING POLE

N.T.S.

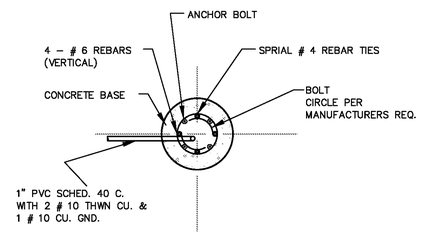

PLAN

N.T.S.

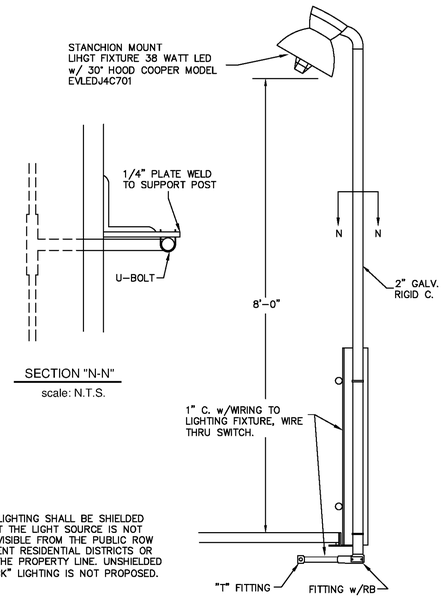

SECTION "N-N"

scale: N.T.S.

NOTE:

EXTERIOR LIGHTING SHALL BE SHIELDED SUCH THAT THE LIGHT SOURCE IS NOT DIRECTLY VISIBLE FROM THE PUBLIC ROW OR ADJACENT RESIDENTIAL DISTRICTS OR USES AT THE PROPERTY LINE. UNSHIELDED "WALL PACK" LIGHTING IS NOT PROPOSED.

TYPICAL STANCHION LIGHT

scale: N.T.S.

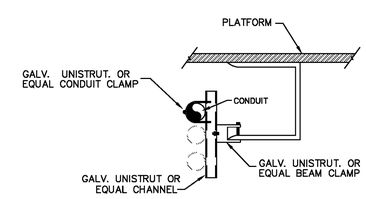

CLARIFIER WALKWAY CONDUIT SUPPORT

scale: N.T.S.

FRANK T. PHELAN
93874
LICENSED
PROFESSIONAL ENGINEER
9/16/13

Jay Engineering Company, Inc.
P.O. Box 1220
Leander, Texas 78646-1220
Tel: (512) 259-3568 Fax: (512) 259-8016
Texas Registered Engineering Firm F-4780

CRYSTAL FALLS WEST - SEC. 1
WRP, OFFSITE LIFT STA. & RECLAIMED WATER PUMP STA.

MISC. CONSTRUCTION DETAILS

THE LOOKOUT GROUP

SCALE: AS NOTED | DWN: JJD | DESIGN: FAJ | DATE: APRIL 2013
DWG. NO. AS NOTED | JOB NO. 157-045-20

no.	date	Revisions	appv.

Sheet
C.20.0

C:\Projects-Lookout-Group\Crystal-Falls-West_Sec1_WRP_LftSta_PrpSta_044-045-046\Const-Plans_WRP\3rd-Set\CFW-Sec1_WRP_Sh-C.20.0_Misc-Const-Details2.dwg

NOTES:

1. Install Silt Fence.
2. All Material To Be Processed To Remove Boulders Greater Than 2 feet.
3. Grade To Plan with Max. 3:1 Slopes.
4. Revegetate Per Specifications.

SF — Silt Fence

Cut/Fill Summary

Name	Cut Factor	Fill Factor	2d Area	Cut	Fill	Net
Surf_Cut-Fill_Quan	1.000	1.000	290413.33 Sq. Ft.	634.45 Cu. Yd.	48431.20 Cu. Yd.	47796.75 Cu. Yd.<Fill>
Totals			290413.33 Sq. Ft.	634.45 Cu. Yd.	48431.20 Cu. Yd.	47796.75 Cu. Yd.<Fill>

JAECO

SCALE: 1" = 50'

0 50 100 150

no.	date	Revisions	appv.

THE LOOKOUT GROUP

SCALE: AS NOTED DWN: JJD DESIGN: FTP DATE: SEPT 2014

DWG. NO. AS NOTED JOB NO. 193-0XX-20

Sheet

C.21.0

Jay Engineering Company, Inc.
P.O. Box 1220
Leander, Texas 78646-1220
Tel. (512) 259-3882 Fax. (512) 259-8016
Texas Registered Engineering Firm F-4780

CRYSTAL FALLS WEST - SEC. 1
WRP, OFFSITE LIFT STA. & RECLAIMED WATER PUMP STA.

STOCKPILE PLAN

FRANK T. PHELAN
93874
REGISTERED PROFESSIONAL ENGINEER
TEXAS
9/24/14

G:\Projects-Taylor-Morrison\Trovisos-WRP_Stockpile_193-0xx-20\Plan\Trovisos-WRP_Stockpile-Plan.dwg

STRUCTURAL NOTES

GENERAL:

GN-1 THE STRUCTURE HAS BEEN DESIGNED TO RESIST DESIGN LOADS ONLY AS A COMPLETED STRUCTURE. APPLICATION OF CONSTRUCTION LOADS TO THE PARTIALLY COMPLETED STRUCTURE SHALL BE CONSIDERED BY THE CONTRACTOR AND SO INCLUDED IN THE DESIGN OF SHORING, BRACING, FORMWORK, AND ANY OTHER SUPPORTING ELEMENTS PROVIDED FOR CONSTRUCTION OF THE STRUCTURE. WHEN SPECIFIED IN THE CONTRACT DOCUMENTS, OR REQUIRED BY THE STRUCTURAL ENGINEER, CONTRACTOR SHALL PRODUCE CALCULATIONS PREPARED BY A REGISTERED ENGINEER IN THE STATE OF TEXAS WHICH VERIFY THE MEANS OF STRUCTURALLY MAINTAINING THE INTEGRITY OF THE STRUCTURE DURING CONSTRUCTION.

GN-2 DURING ERECTION AND UNTIL ALL PERMANENT CONNECTIONS ARE MADE, THE CONTRACTOR SHALL PROVIDE TEMPORARY BRACING TO BRACE THE STRUCTURE IN ALL DIRECTIONS. (REF. GN-1).

GN-3 GENERAL CONTRACTOR SHALL CHECK AND VERIFY ALL DIMENSIONS, GRADE CONDITIONS, (BOTH NEW AND EXISTING), EXISTING STRUCTURAL DETAILS (IF ANY), REPORTING ANY DISCREPANCIES TO THE STRUCTURAL ENGINEER BEFORE PROCEEDING WITH ANY PHASE OF THE WORK AS THE GENERAL CONTRACTOR SHALL BE RESPONSIBLE FOR ALL WORK FITTING AS INTENDED BY THE CONTRACT DOCUMENTS.

GN-4 DETAILS IN THE CONTRACT DOCUMENTS INDICATED AS "TYPICAL" SHALL APPLY IN ALL AREAS WHERE CONDITIONS SIMILAR TO THE DETAIL OCCUR.

GN-5 STRUCTURAL DESIGN CRITERIA:

I. LIVE LOADS:

A. MINIMUM LIVE LOADS – LBS. PER SQUARE FOOT

OFFICES –	50
STORAGE BUILDING –	250
WALKWAYS, GRATING & SUPPORTS –	150
ROOFS W/PITCH LESS THAN 3:12 –	20

B. WIND LOADS – 2009 INTERNATIONAL BUILDING CODE

BASIC WIND SPEED (MPH)	90
EXPOSURE CLASSIFICATION	B

D. SEISMIC LOADS –

IMPORTANCE FACTOR –	Ie=1.25
SITE CLASS-	D
SPECTRAL RESPONSE ACCELERATION-	Ss -8.35 %g
	SI -3.89 %g
SEISMIC DESIGN CATEGORY –	A

II. FUTURE LOADS: UNLESS SPECIFICALLY NOTED, THERE ARE NO PROVISIONS MADE FOR FUTURE FLOORS, ROOFS, OR OTHER LOADS.

III. APPLICABLE CODES:

A. A.C.I. 350-01
B. A.I.S.C. ASD MANUAL-NINTH EDITION 1989
C. A.W.S. D1.1-94 – STRUCTURAL WELDING CODE – STEEL
D. A.W.S. D1.4-92 – STRUCTURAL WELDING CODE – REINFORCING STEEL
E. A.I.S.I. SPECIFICATION FOR THE DESIGN OF COLD-FORMED STEEL STRUCTURAL MEMBERS, 1986 (REVISED 1989)
F. MBNA-LOW RISE BUILDING SYSTEMS MANUAL, 1986 (REVISED 1990)
G. PCI MNL-120-92- DESIGN HANDBOOK PRECAST/PRESTREED CONCRETE
H. STEEL DECK INSTITUTE-DIAPHRAGM DESIGN MANUAL , SECOND EDITION
I. 2009 INTERNATIONAL BUILDING CODE

IV. THE FOUNDATION SYSTEM DESIGN IS BASED ON THE RECOMMENDATIONS OF THE GEOTECHNICAL REPORT NO. 1210400.188, DATED JULY 19, 2012, PREPARED BY MLA LABS, INC.

GN-6 THE STRUCTURAL CONTRACT DOCUMENTS ARE NOT INTENDED FOR USE AS SHOP/ERECTION DRAWINGS.

GN-7 SUBMITTAL OF CALCULATIONS FOR PRE-ENGINEERED STRUCTURAL ELEMENTS IS FOR RECORD PURPOSES ONLY. DESIGN, AND FABRICATION OF THESE ELEMENTS IS THE RESPONSIBILITY OF THE SUPPLIER/MANUFACTURER, WHO IS TO ENGAGE A QUALIFIED PROFESSIONAL ENGINEER TO PREPARE DESIGN CALCULATIONS AND OTHER STRUCTURAL DATA. EXAMPLES OF PRE-ENGINEERED ELEMENTS INCLUDE, WALKWAYS, GRATINGS, HANDRAILS, STAIRS, PRECAST HOLLOW CORE SLABS AND PRE ENGINEERED BUILDINGS.

GN-8 REFERENCE MECHANICAL, ELECTRICAL AND PLUMBING CONTRACT DOCUMENTS FOR LOCATION AND SIZE OF ANY ITEMS WHICH MAY REQUIRE SLAB OPENINGS, SLEEVES, INSERTS, ANCHORS AND BOLTS REQUIRED BY VARIOUS TRADES.

GN-9 REFER TO ARCHITECTURAL CONTRACT DOCUMENTS FOR FLOOR FINISHES, DIMENSIONS AND LOCATIONS OF SLAB DROPS, DEPRESSIONS, CURBS, HANDRAIL DETAILS, ETC.

GN-10 PROVIDE ADEQUATE STRUCTURAL FRAMING AS APPROVED BY THE STRUCTURAL ENGINEER FOR ALL REQUIRED MECHANICAL OPENINGS THROUGH SLABS, WALLS, FLOOR OR ROOF DECK, ETC., AND SUPPORT OF ALL MECHANICAL EQUIPMENT. OPENINGS SHALL NOT BE PERMITTED THROUGH BEAMS UNLESS SPECIFICALLY DETAILED BY THE STRUCTURAL ENGINEER.

GN-11 CONSTRUCTION MATERIALS SHALL NOT BE STORED ON FLOORS OR ROOFS IN EXCESS OF THE DESIGN LIVE LOADS REFERENCED IN NOTE GN-5, I-A. IT IS THE CONTRACTOR'S RESPONSIBILITY TO ENFORCE THIS REQUIREMENT. IMPACT LOADS SHALL BE PREVENTED WHEN PLACING MATERIALS ON FLOORS OR ROOFS.

QUALITY CONTROL:

QC-1 QUALITY CONTROL SERVICES INCLUDE INSPECTIONS, TESTS AND RELATED ACTIONS, INCLUDING REPORTS PERFORMED BY EITHER THE CONTRACTOR, BY INDEPENDENT TESTING AGENCIES OR GOVERNING AUTHORITIES. THEY DO NOT INCLUDE CONTRACT ENFORCEMENT ACTIVITIES PERFORMED BY THE STRUCTURAL ENGINEER.

QC-2 INSPECTION AND TESTING SERVICES ARE REQUIRED TO VERIFY COMPLIANCE WITH REQUIREMENTS SPECIFIED OR INDICATED. THESE SERVICES DO NOT RELIEVE THE CONTRACTOR OF RESPONSIBILITY FOR COMPLIANCE WITH CONTRACT DOCUMENTS REQUIREMENTS.

QC-3 CONTRACTOR IS RESPONSIBLE FOR RETESTING WHERE RESULTS OF INSPECTIONS, TESTS, OR OTHER QUALITY-CONTROL SERVICES PROVE UNSATISFACTORY AND INDICATE NONCOMPLIANCE WITH CONTRACT DOCUMENTS REQUIREMENTS, REGARDLESS OF WHETHER THE ORIGINAL TEST WAS CONTRACTOR'S RESPONSIBILITY.

QC-4 CONTRACTOR SHALL COORDINATE THE SEQUENCE OF ACTIVITIES TO ACCOMMODATE REQUIRED QUALITY-CONTROL SERVICES WITH A MINIMUM OF DELAY. CONTRACTOR IS RESPONSIBLE FOR SCHEDULING TIMES FOR INSPECTIONS, TESTS, TAKING SAMPLES, AND SIMILAR ACTIVITIES. CONTRACTOR IS TO PROVIDE THE STRUCTURAL ENGINEER, TESTING AGENCY AND ANY OTHER GOVERNING AUTHORITY A MINIMUM OF 24 HOURS NOTICE WHEN THEIR SERVICES ARE REQUIRED.

QC-5 THE INDEPENDENT AGENCY ENGAGED TO PERFORM INSPECTIONS, SAMPLING, AND TESTING OF MATERIALS AND CONSTRUCTION AS SPECIFIED HEREIN, SHALL NOTIFY THE OWNER, STRUCTURAL ENGINEER AND THE CONTRACTOR PROMPTLY OF IRREGULARITIES OR DEFICIENCIES OBSERVED IN THE WORK DURING PERFORMANCE OF ITS SERVICES. THE AGENCY IS NOT AUTHORIZED TO RELEASE, REVOKE, ALTER, OR ENLARGE REQUIREMENTS OF THE CONTRACT DOCUMENTS OR APPROVE OR ACCEPT ANY PORTION OF THE WORK.

CONCRETE/REINFORCING:

CR-1 USE OF DIFFERENT CLASSES OF CONCRETE SHALL BE AS SHOWN BELOW. CONCRETE BATCH DESIGN(S) SHALL BE PROPORTIONED AND PRODUCED IN ACCORDANCE WITH A.C.I. 350-01 AND A.C.I. 301-99 REFERENCE CONCRETE SPECIFICATIONS FOR SLUMP REQUIREMENTS, QUALITY CONTROL, TEST REQUIREMENTS, ETC.

F'c = 4000 PSI MINIMUM – ALL CONCRETE FOR GRADE SUPPORTED SLABS, SLABS OVER METAL DECK, RETAINING WALLS, FOOTINGS, AND ALL CONCRETE NOT SPECIFICALLY COVERED.

CR-2 CONTRACTOR SHALL PROVIDE NECESSARY CONSTRUCTION JOINTS IN MONOLITHIC CONCRETE FRAMING SO THAT NOT MORE THAN 400 CUBIC YARDS ARE POURED IN ONE DAY. REQUIRED CONSTRUCTION JOINT LAYOUT IS ADDRESSED IN THE FOUNDATION FRAMING PLANS.

CR-3 LOCATION OF CONSTRUCTION JOINTS SHALL HAVE PRIOR REVIEW BY THE STRUCTURAL ENGINEER AND SHALL BE GENERALLY LOCATED AT OR NEAR MIDPOINTS OF SPANS OF MEMBERS. ALL CONTINUOUS REINFORCING SHALL BE CARRIED THROUGH THE JOINT. REFERENCE DETAILS FOR CONTINUOUS KEY BETWEEN ADJACENT POURS AND ADDITIONAL REINFORCING AT THESE CONSTRUCTION JOINTS.

CR-4 REINFORCING BARS SHALL CONFORM TO THE FOLLOWING A.S.T.M. SPECIFICATIONS:

ALL BAR REINFORCING –	A-615, GRADE 60
WELDED WIRE FABRIC –	A-185

CR-5 ABSOLUTELY NO WELDING OF REINFORCING BARS OR TORCHING TO BEND REINFORCING BARS SHALL BE ALLOWED WITHOUT THE SPECIFIC APPROVAL OF THE STRUCTURAL ENGINEER.

CR-6 MINIMUM CONCRETE CLEAR COVER SHALL BE :

CONCRETE CAST AGAINST AND PERMANENTLY EXPOSED TO EARTH	3"
ALL OTHER CONCRETE	2"

CR-7 BAR SUPPORT ACCESSORIES SHALL BE PROVIDED IN ACCORDANCE WITH THE LATEST A.C.I. MANUAL OF STANDARD PRACTICE FOR DETAILING REINFORCED CONCRETE STRUCTURES, EXCEPT THAT BEAM REINFORCING SHALL BE SUPPORTED ON BEAM BOLSTERS SPACED NOT MORE THAN 4 FEET ON CENTER. WHEN THE CONCRETE SURFACE WILL BE EXPOSED TO VIEW AND/OR WEATHER, THE PORTIONS OF ALL BAR SUPPORTS WITHIN ½" OF THE CONCRETE SURFACE SHALL BE NONCORROSIVE OR PROTECTED AGAINST CORROSION. BAR SUPPORTS FOR CONCRETE WITH A SANDBLAST FINISH SHALL HAVE STAINLESS STEEL BAR SUPPORTS.

CR-8 FOR GRADE SUPPORTED SLABS, SLAB REINFORCING SHALL BE HELD IN PLACE BY BAR SUPPORTS AND ACCESSORIES SUPPLIED WITH SAND PLATES. PRECAST CONCRETE BAR SUPPORTS AS DESCRIBED IN CHAPTER 3 OF THE CRSI MANUAL OF STANDARD PRACTICE MAY ALSO BE USED. BAR SUPPORTS SHALL BE SPACED A MAXIMUM OF 4'-0" O.C. BOTH WAYS. NO ROCKS, CMU, CLAY TILE, OR BRICK SHALL BE USED TO SUPPORT REINFORCING. MINIMUM CLEAR CONCRETE COVER FOR GRADE SUPPORTED SLABS SHALL BE AS FOLLOWS:

SINGLE MAT REINFORCEMENT	2" FROM TOP
TWO MAT REINFORCEMENT	
TOP MAT	2" FROM TOP
BOTTOM MAT	3" FROM BOTTOM

CR-9 MECHANICAL AND ELECTRICAL CONDUITS OR PIPES IN SLABS SHALL RUN UNDER TOP LAYER OF SLAB REINFORCING. PROVIDE A MINIMUM OF 1-1/2" CLEAR BETWEEN CONDUITS AND BETWEEN REINFORCING AND ADJACENT CONDUITS PARALLEL TO REINFORCING. CONDUITS SHALL BE SPACED AT A DISTANCE OF 3 DIAMETERS OR WIDTHS ON CENTER. IF MAXIMUM SIZE OF CONDUIT EXCEEDS ONE THIRD OF THE SLAB DEPTH, NOTIFY THE STRUCTURAL ENGINEER, AS REVISIONS TO THE SLAB THICKNESS AND/OR REINFORCING REQUIREMENTS MAY BE NECESSARY.

CR-10 WHERE SHOWN IN THE DETAILS, H.C.A. STANDS FOR HEADED CONCRETE ANCHORS. ANCHORS SHALL CONFORM TO THE REQUIREMENTS OF A.S.T.M. A108, GRADES 1010, 1015, 1017, OR 1020. STUDS SHALL BE AUTOMATICALLY END WELDED IN THE SHOP OR FIELD IN ACCORDANCE WITH THE MANUFACTURER'S RECOMMENDATIONS.

CR-11 WHERE ADHESIVE ANCHORS (ADH. ANCH.) ARE SHOWN, THEY SHALL CONSIST OF STEEL ALL-THREAD ANCHOR ROD, NUT WASHER, AND ADHESIVE MATERIALS. ANCHORS SHALL BE MANUFACTURED FROM SAE GRADE 2, MEETING THE REQUIREMENTS OF A.S.T.M. A36 . ANCHOR RODS SHALL HAVE ROLLED THREADS AND SHALL BE FURNISHED WITH CHAMFERED ENDS OR WITH A 45 DEGREE CHISEL POINT ON ONE END TO ALLOW FOR EASY INSERTION INTO THE ADHESIVE-FILLED HOLE. THE ADHESIVE SHALL BE FORMULATED TO INCLUDE RESIN, HARDENER CEMENT AND WATER TO PROVIDE OPTIMAL CURING SPEED AS WELL AS HIGH STRENGTH AND STIFFNESS. ADHESIVE SHALL BE FURNISHED IN SIDE BY SIDE REFILL PACKS WHICH KEEP SEPARATE COMPONENT A AND COMPONENT B. ANCHORS SHALL BE INSTALLED USING MINIMUM DEPTHS, EDGE DISTANCES, SPACING (UNLESS NOTED OTHERWISE), AND INSTALLATION PROCEDURES AS RECOMMENDED BY THE MANUFACTURER. DO NOT APPLY LOAD TO ANCHOR UNTIL ADHESIVE HAS CURED IN ACCORDANCE WITH RECOMMENDATIONS OF THE MANUFACTURER. ACCEPTABLE ADHESIVE ANCHORS ARE HILTI HY 150 INJECTION ADHESIVE ANCHORS.

CR-12 WHERE NON-METALLIC, SHRINKAGE-RESISTANT GROUT IS SHOWN IN THE CONTRACT DOCUMENTS IT SHALL BE A PRE-MIXED, NON-METALLIC, NON-CORROSIVE, NON-STAINING PRODUCT CONTAINING SILICA SANDS, PORTLAND CEMENT, SHRINKAGE-COMPENSATING AGENTS, PLASTICIZING AND WATER-REDUCING AGENTS COMPLYING WITH A.S.T.M. C1107.

ACCEPTABLE PRODUCTS ARE: CRYSTEX; L&M CONSTRUCTION CHEM.
MASTERFLOW 713; MASTER BUILDERS
STAR GROUT; U.S. GROUT CORP.
UPCOM:UPCO CHEM. DIVISION, USM CORP.

CR-13 REINFORCING SUPPLIER SHALL PROVIDE COMPLETE PLACEMENT AND FABRICATING DRAWINGS FOR ALL REINFORCING INCLUDING THE LOCATION AND SIZE OF ALL ACCESSORIES AND SUPPORTS.

CR-14 CONCRETE. MIX DESIGN SHALL MEET THE FOLLOWING REQUIREMENTS:

-CEMENT TYPE:	ASTM C150, TYPE I OR III
-FLY ASH:	ASTM C618, TYPE C OR F (20% OF CEMENT CONTENT BY WT. MAX)-SINGLE SOURCE REQUIRED
-AGGREGATES:	ASTM C33
-AIR CONTENT:	ASTM C260, 2 TO 4%
-SLUMP LIMITS:	MAXIMUM 8"
-WATER/CEMENT RATIO:	0.45

ALL STRUCTURAL CONCRETE MIXES TO UTILIZE A HIGH-RANGE WATER-REDUCING ADMIXTURE.

GENERAL CONTRACTOR IS TO SUBMIT WRITTEN REPORT FOR THE PROPOSED MIX DESIGN AT LEAST 7 DAYS PRIOR TO START OF CONCRETE WORK.

CR-15 ALL ITEMS EMBEDDED IN CONCRETE SHALL BE TIED AND SECURED PRIOR TO PLACEMENT OF CONCRETE.

CR-16 MECHANICAL VIBRATOR (USED AT 18" INTERVALS MAXIMUM), HAND RODDING AND TAMPING SHALL BE USED TO CONSOLIDATE CONCRETE AND TO INSURE THAT CONCRETE IS WORKED AROUND REINFORCEMENT, OTHER EMBEDDED ITEMS AND INTO FORMS.

CR-17 DO NOT PLACE CONCRETE WHEN THE AMBIENT TEMPERATURE IS EXPECTED TO BE 95 DEGREES °F OR ABOVE AND/OR 40 DEGREES °F OR BELOW, FOR THE FIRST THREE HOURS AFTER PLACEMENT.

CR-18 ALL SLABS AND EXPOSED SURFACES FOR NON-FLUID CONTAINING STRUCTURES SHALL BE CURED USING A LIQUID-TYPE MEMBRANE CURING COMPOUND COMPLYING WITH ASTM C309, TYPE I, CLASS A. MOISTURE LOSS NOT MORE THAN 0.55 KG/M² IN 72 HOURS WHEN APPLIED AT 200 SQ. FT./GAL. AND TESTED IN ACCORDANCE WITH ASTM C156. CURING COMPOUND SHALL BE APPLIED IN ACCORDANCE WITH MANUFACTURER'S RECOMMENDATIONS. DO NOT USE MEMBRANE CURING COMPOUNDS ON SURFACES TO BE COVERED WITH FINISH MATERIALS/COATINGS APPLIED DIRECTLY TO CONCRETE. IF LIQUID TYPE CURING COMPOUND IS NOT USED PROVIDE OTHER MEANS OF CURING SUBJECT TO REVIEW BY THE STRUCTURAL ENGINEER. REF. PLAN NOTES FOR CURING REQUIREMENTS FOR FLUID CONTAINING STRUCTURES.

CR-19 MONOLITHIC SLAB SURFACES SHALL BE FINISHED AS INDICATED IN THE CONTRACT DOCUMENTS.

CR-20 GENERAL CONTRACTOR SHALL EMPLOY A TESTING LABORATORY TO PERFORM SAMPLING AND TESTING DURING CONCRETE PLACEMENT AS FOLLOWS:

-AGGREGATES	ASTM, C33, ONE TEST THE FIRST DAY
-COMPRESSIVE STRENGTH:	ASTM C39, ONE SET OF 5 CYLINDERS, FOR EACH DAY'S POUR OF 5 CU. YD. BUT LESS THAN 25 CU. YD. PLUS ONE SET FOR EACH ADDITIONAL 50 CU. YD. OR FRACTION THEREOF. TWO CYLINDERS TESTED AT 7 DAYS, TWO TESTED AT 28 DAYS, REMAINING ONE TO BE TESTED AT 56 DAYS IF NECESSARY.
-AIR CONTENT	ASTM C2312, PRESSURE METHOD. ONE TEST FOR EACH COMPOSITE SAMPLE.
-SLUMP	ASTM C143, ONE TEST AT POINT OF PLACEMENT FOR EACH COMPOSITE SAMPLE

CR-21 ALL FOOTINGS AND SLABS ON GRADE MUST HAVE THEIR PERIMETERS HARDFORMED. USE OF EXCAVATION EDGES AS FORMS IS NOT ACCEPTABLE.

CR-22 ALL WALL TIE HOLES & HONEYCOMB AREAS SHALL BE FILLED W/"EUCLID" VERTICOAT SUPREME REPAIR MORTAR. HONEYCOMB AREAS SHALL BE FILLED IN MAXIMUM TWO INCH LIFTS. PRIME AREAS TO BE FILLED OR REPAIRED W/A SLURRY COAT OF VERTICOAT SUPREME.

CR-23 FORM WALL TIES SHALL HAVE A BREAKOFF NO LESS THAN 1 ½" BELOW THE FACE OF THE WALL AND SHALL BE GALVANIZED OR STAINLESS STEEL. CONTRACTOR SHALL SUBMIT PROPOSED FORM TIES TO ENGINEER FOR APPROVAL. THROUGH WALL TAPER TIES ARE ACCEPTABLE BUT THEY MUST BE SEALED UTILIZING MECHANIC VERTICOAT SUPREME.

CR-24 ALL EXPOSED CONCRETE SURFACES SHALL BE FINISHED BY A TWO RUB PROCESS AS PER TEXAS DEPARTMENT OF TRANSPORTATION 2004 STANDARD SPECIFICATION FOR CONSTRUCTION OF HIGHWAYS. PRIOR TO PERFORMING THE RUB FINISH ALL WALL TIE HOLES SHALL BE FILLED WITH A NON-SHRINK, HIGH STRENGTH GROUT.

CONCRETE TOPPING:

CO-1 MINIMUM DEPTH OF TOPPING SHALL BE 3/4". EXISTING SLAB SHALL BE REMOVED TO THE LEVEL REQUIRED SO THAT THIS CRITERIA IS MET. CONTRACTOR SHALL SUBMIT TO STRUCTURAL ENGINEER THE PROPOSED PROCEDURE(S) FOR THE REMOVAL OF EXISTING SLABS PRIOR TO START OF WORK.

CO-2 PREPARE SURFACE TO ACCEPT TOPPING BY REMOVING ALL UNSOUND CONCRETE, LOOSE MATERIAL AND FOREIGN MATTER (REFER NOTE CO-1).

CO-3 SURFACES SHALL BE STRUCTURALLY SOUND, CLEAN AND FREE OF PAINT, GREASE, OIL, SOIL, CURING AND PAINTING COMPOUND AND OTHER FOREIGN MATTER. IF REQUIRED CLEAN SURFACES WITH A 10-15% MURIATIC ACID SOLUTION AND RINSE WITH CLEAR WATER TO ELIMINATE ALL TRACES OF THE ACID. A PROPERLY PREPARED SURFACE SHALL BE CLEAN AND SOUND, AND UNIFORMLY WETTABLE WITH WATER.

CO-4 APPLY BONDING AGENT TO THE MOISTENED SURFACE IN STRICT ACCORDANCE WITH THE MANUFACTURER'S RECOMMENDATIONS. WHILE THE BONDING AGENT IS STILL SOFT AND PLASTIC, APPLY CONVENTIONAL PORTLAND CEMENT TOPPING CONSISTING OF PORTLAND CEMENT, SAND AND GRAVEL. PLACE CONCRETE AT A SLUMP OF 4 INCHES AND FINISH AS SPECIFIED. DO NOT USE STEEL TROWELING FOR FINISHING THE SURFACE LATER THAN 2 HOURS AFTER PLACING OF THE CONCRETE TOPPING SINCE THIS MAY BREAK THE BOND BETWEEN THE BONDING AGENT AND THE EXISTING SURFACE BEFORE BOND STRENGTH HAS FULLY DEVELOPED.

CO-5 REINFORCING FOR TOPPING SLABS SHALL BE AS FOLLOWS:

3/4" TO 3-1/2"	W.W.F. 6X6 – W4.0XW4.0
3-1/2" TO 5"	#3 @ 12" O.C.
5" TO 10"	#4 @ 12" O.C.

GRADE-SUPPORTED SLABS/BEAMS:

GS-1 SITE PREPARATION FOR THE BUILDING PAD SHALL INCLUDE:

1. REMOVAL OF ANY ASPHALT, CONCRETE, VEGETATION, LOOSE TOPSOIL AND DEBRIS. ALL EXISTING BUILDINGS TO BE DEMOLISHED SHALL BE COMPLETELY REMOVED FROM THE SITE. EXISTING FOUNDATIONS TO BE REMOVED SHALL BE EXCAVATED TO A MINIMUM DEPTH OF 24 INCHES.

2. REMOVAL OF EIGHT FEET OF THE EXISTING SUBGRADE SOIL MATERIAL UNDER THE FOOTPRINT OF THE NEW STRUCTURE.

3. ONCE DEMOLITION, FOUNDATION EXCAVATION, SITE STRIPPING AND SUBGRADE REMOVAL HAS BEEN COMPLETED, THE EXPOSED SUBGRADE SHALL BE PROOF ROLLED WITH AT LEAST A 15-TON PNEUMATIC ROLLER TO DETECT WEAK AREAS. WEAK AREAS AND AREAS CONTAINING LOOSE FILL OR ORGANICS SHALL BE REMOVED AND REPLACED WITH SOILS FREE OF ANY ORGANICS AND EXHIBITING SIMILAR CLASSIFICATION, MOISTURE CONTENT AND DENSITY AS THE ADJACENT IN-SITU SOILS. FILL MATERIAL SHALL BE PLACED AND COMPACTED AS INDICATED BELOW. WHERE 15-TON ROLLER IS IMPRACTICAL DUE TO CONSTRUCTION RESTRICTIONS, PROVIDE ALTERNATE MEANS ACCEPTABLE TO STRUCTURAL ENGINEER.

4. EXPOSED SUBGRADE SHALL BE SCARIFIED TO A MINIMUM DEPTH OF SIX INCHES AND RECOMPACTED TO A MINIMUM OF 95% PERCENT OF A.S.T.M. D-698 MAXIMUM DRY DENSITY. MOISTURE CONTENT OF THE SUBGRADE SHALL BE MAINTAINED WITHIN -1 PERCENT AND +3 PERCENT OF THE OPTIMUM MOISTURE CONTENT UNTIL PERMANENTLY COVERED.

5. NON-EXPANSIVE FILL TO BE USED FOR GRADE ADJUSTMENT AND PREPARATION OF BUILDING PAD SHALL BE TYPE I FILL AS DESCRIBED BELOW:

TYPE I: MATERIAL MEETING THE REQUIREMENTS OF THE TEXAS DEPARTMENT OF TRANSPORTATION 1992 STANDARD SPECIFICATION FOR CONSTRUCTION OF HIGHWAYS, STREETS AND BRIDGES, ITEM 247, TYPE A, GRADE 2 OR 3 (CRUSHED STONE).

6. NON-EXPANSIVE FILL SHALL BE PLACED IN LIFTS NOT TO EXCEED EIGHT (8) INCHES LOOSE MEASURE AND COMPACTED TO A MINIMUM OF 95% OF THE MAXIMUM DRY DENSITY AS DETERMINED BY A.S.T.M. D-698, METHOD D. THE MOISTURE CONTENT OF THE FILL SHALL BE MAINTAINED WITHIN -2/+3 PERCENT OF THE OPTIMUM MOISTURE CONTENT UNTIL PERMANENTLY COVERED.

7. PERFORM FIELD-IN-PLACE DENSITY TESTS ACCORDING TO A.S.T.M. D1556, A.S.T.M. D2167, OR A.S.T.M. D2937 AS APPLICABLE. FIELD TESTING TO COMPLY WITH THE FOLLOWING:

-PAVED AND BUILDING SLAB AREAS: AT SUB-GRADE AND AT EACH COMPACTED FILL AND BACKFILL LAYER PERFORM AT LEAST ONE FIELD-IN-PLACE DENSITY TEST FOR EVERY 2000 SQ. FT. OR LESS OF PAVED/BUILDING SLAB AREA, BUT NO FEWER THAN THREE TESTS.

-FOUNDATION WALL BACKFILL: IN EACH COMPACTED BACKFILL LAYER, PERFORM AT LEAST ONE FIELD IN-PLACE DENSITY TEST FOR EACH 100 FT. OR LESS OF WALL LENGTH, BUT NO FEWER THAN TWO TESTS ALONG A WALL FACE.

WHEN TESTING AGENCY REPORT THAT SUB-GRADES, FILLS, OR BACKFILLS ARE BELOW SPECIFIED DENSITY, SCARIFY AND MOISTEN OR AERATE, OR REMOVE AND REPLACE SOIL TO DEPTH REQUIRED, RE-COMPACT AND RETEST UNTIL REQUIRED DENSITY IS OBTAINED.

GS-2 PROPER SITE DRAINAGE SHALL BE MAINTAINED DURING CONSTRUCTION TO INSURE SURFACE RUNOFF AWAY FROM THE STRUCTURES AND TO PREVENT PONDING OF SURFACE RUNOFF NEAR THE STRUCTURES.

GS-3 ALL GRADE SUPPORTED SLABS SHALL BE OF THE THICKNESS AND REINFORCED AS SHOWN IN THE STRUCTURAL DRAWINGS. WHEN REQUIRED, LAPS IN CONTINUOUS SLAB REINFORCING SHALL BE STAGGERED A MINIMUM OF 24 INCHES. LAPS SHALL BE CLASS B SPLICES AS PER CHAPTER 12 OF ACI 318.

GS-4 FOR ALL SLABS WITH AN ENCLOSED STRUCTURE ABOVE OR AS OTHERWISE INDICATED A TEN MIL. POLYETHYLENE VAPOR BARRIER SHALL BE PLACED DIRECTLY ABOVE THE COMPACTED FILL MATERIAL. LAP AND TAPE ALL JOINTS AND HOLES. VAPOR BARRIER SHALL EXTEND ALONG THE BEAMS' INTERIOR SIDES AND TERMINATE AT THE BEAMS' SOFFIT.A

GS-5 AFTER VAPOR BARRIER MATERIAL IS INSTALLED, PLACE REINFORCING STEEL IN GRADE SUPPORTED BEAMS AND SLAB AS INDICATED IN THE STRUCTURAL CONTRACT DOCUMENTS WHILE OBSERVING THE FOLLOWING REQUIREMENTS:

-LAPS IN CONTINUOUS SLAB REINFORCING SHALL BE STAGGERED AND SHALL CONFORM TO TABLE "A" ON SHEET S.2.0.

-LAPS IN CONTINUOUS BEAM REINFORCING WHEN NECESSARY SHALL OCCUR NEAR BEAM INTERSECTIONS FOR TOP REINFORCING AND MIDWAY BETWEEN BEAM INTERSECTIONS FOR BOTTOM REINFORCING, AND SHALL CONFORM TO TABLE "A".

STRUCTURAL STEEL:

SS-1 ALL STRUCTURAL STEEL FOR WIDE FLANGE SHAPES SHALL BE A.S.T.M. A992 GR. 50, STEEL FOR PLATES SHALL BE A.S.T.M. A36. STRUCTURAL STEEL FOR PIPE AND TUBE COLUMNS SHALL BE: A) ROUND STEEL PIPE COLUMNS: A.S.T.M. A53, TYPE E OR S, GRADE B, OR A.S.T.M. A501. B) SQUARE OR RECTANGULAR TUBE COLUMNS: A.S.T.M. A500, GRADE B. ALL STRUCTURAL STEEL SHALL BE FABRICATED AND ERECTED IN ACCORDANCE WITH THE LATEST A.I.S.C. SPECIFICATIONS.

SS-2 ALL WELDS SHALL BE MADE USING E 70XX ELECTRODES CONFORMING TO THE AMERICAN WELDING SOCIETY (AWS) "STRUCTURAL WELDING CODE" D1.1.

SS-3 FULL PENETRATION WELDED CONNECTIONS SHALL BE PROVIDED WHERE INDICATED BY THE MARK. A MINIMUM 10% OF ALL FIELD AND/OR SHOP FULL PENETRATION WELDS SHALL BE TESTED BY EITHER X-RAY OR ULTRASONIC PROCEDURES. REFERENCE SPECIFICATIONS FOR OTHER TESTING.

SS-4 BOLTED BEAM CONNECTIONS SHALL BE SIMPLE FRAMED SHEAR CONNECTIONS IN ACCORDANCE WITH THE SPECIFICATIONS FOR STRUCTURAL JOINTS USING A.S.T.M. A325 OR A490 BOLTS. UNLESS NOTED OTHERWISE IN THE STRUCTURAL CONTRACT DOCUMENTS, THE REACTIONS FOR BEAMS SHALL BE DESIGNED USING ½ OF THE TABULATED ALLOWABLE LOAD FOR THE GIVEN SPAN AS TABULATED IN PART 2 OF THE AISC MANUAL OF STEEL CONSTRUCTION. DIRECT TENSION INDICATOR (DTI), BOLTS SHALL BE PERMITTED. ALL BOLTED CONNECTIONS SHALL BE BEARING TYPE CONNECTIONS UNLESS NOTED AS SLIP CRITICAL. WASHERS SHALL BE INSTALLED UNDER NUTS OF FASTENERS WHEN REQUIRED BY THE SPECIFICATIONS FOR STRUCTURAL JOINTS.

SS-5 WHERE SHOWN IN THE STRUCTURAL CONTRACT DOCUMENTS, ANCHOR BOLTS SHALL CONSIST OF STEEL THREADED ROD, NUT AND WASHER. ANCHOR RODS SHALL BE MANUFACTURED FROM SAE GRADE 2, MEETING THE REQUIREMENTS OF A.S.T.M. A36 . ANCHOR RODS SHALL HAVE ROLLED THREADS.

SS-6 STEEL FABRICATOR SHALL VERIFY WITH STRUCTURAL ENGINEER ALL BEAM SPLICES OTHER THAN THOSE SHOWN ON THE PLANS. ANY FULL PENETRATION SHOP SPLICES APPROVED BY STRUCTURAL ENGINEER SHALL BE INSPECTED BY RADIOGRAPHIC METHODS BY A TESTING LABORATORY SELECTED BY THE STRUCTURAL ENGINEER AND PAID FOR BY THE FABRICATOR.

SS-7 WHERE SHOWN IN THE STRUCTURAL CONTRACT DOCUMENTS, TEFLON SLIDE BEARING PADS SHALL BE PROVIDED. BEARING PADS SHALL BE DURA-SLIDE AS MANUFACTURED BY TOBI ENGINEERING, INC. OR APPROVED EQUAL.

SS-8 ALL STRUCTURAL STEEL SHALL BE CLEANED AND GALVANIZED. APPLY ZINC COATING BY THE HOP-DIP PROCESS ACCORDING TO A.S.T.M. A123. FIELD WELDS, BOLTED CONNECTIONS AND ABRADED AREAS SHALL BE CLEANED AND "TOUCH UP" WITH GALVANIZING REPAIR PAINT IN ACCORDANCE WITH A.S.T.M. A780. THE GALVANIZING REPAIR PAINT SHALL HAVE A HIGH ZINC-DUST CONTENT WITH DRY FILM CONTAINING NO LESS THAN 95 PERCENT ZINC-DUST BY WEIGHT, AND COMPLYING WITH DOD-P-21035A OR SSPC-PAINT 20.

SS-9 PRIOR TO START OF FABRICATION, STEEL FABRICATOR SHALL PROVIDE COMPLETE ERECTION AND FABRICATION DRAWINGS SHOWING ALL MEMBERS AND CONNECTIONS.

METAL DECK:

MD-1 GALVANIZED STEEL ROOF DECK SHALL CONFORM TO THE LATEST EDITION OF A.S.T.M. A653, STRUCTURAL QUALITY (Fy=33 KSI). GALVANIZING SHALL CONFORM TO A.S.T.M. A924 WITH A MINIMUM COATING CLASS OF G-90 AS DEFINED IN A.S.T.M. A653 . OTHER PROPERTIES SHALL HAVE THE FOLLOWING MINIMUMS:

ROOF DECK: DEPTH	1-1/2"
GAGE:	24
I – SECTION MOMENT OF INERTIA:	0.093 IN.4/FT.
S – SECTION MODULUS	0.132 IN.3/FT.

VULCRAFT TYPE 1.5B DECK OR APPROVED EQUAL OR BETTER.

DECKING SHALL BE CONTINUOUS OVER AT LEAST 3 SUPPORTS. EACH DECKING PANEL SHALL BE ATTACHED TO SUPPORTING MEMBERS AND ADJACENT PANELS WITH 5/8" DIA. PUDDLE WELDS AS INDICATED BELOW:

32 IN. PANEL	
NO. OF END AND SUPPORT WELDS	4
SPACING OF SIDELAP AND EDGE WELDS	12" O.C.

GALVANIZED STEEL ROOF DECK SHALL CONFORM TO LATEST EDITION OF A.S.T.M. A653, STRUCTURAL QUALITY (Fy=33 KSI) . GALVANIZING SHALL CONFORM TO A.S.T.M. A924 WITH A MINIMUM COATING CLASS OF G-90 AS DEFINED IN A.S.T.M. A653. OTHER PROPERTIES SHALL HAVE THE FOLLOWING MINIMUMS:

MD-2 DECK MANUFACTURER SHALL FURNISH RIDGE AND VALLEY PLATES AND FLAT PLATES AT CHANGE OF DECK DIRECTION TO PROVIDE A FINISHED SURFACE FOR THE APPLICATION OF ROOF INSULATION AND ROOF COVERING.

MD-3 PRIOR TO START OF FABRICATION, STEEL FABRICATOR SHALL PROVIDE COMPLETE ERECTION AND FABRICATION DRAWINGS SHOWING LAYOUT AND TYPES OF DECK PANELS, ANCHORAGE DETAILS, SUPPLEMENTARY FRAMING AND ALL ACCESSORIES.

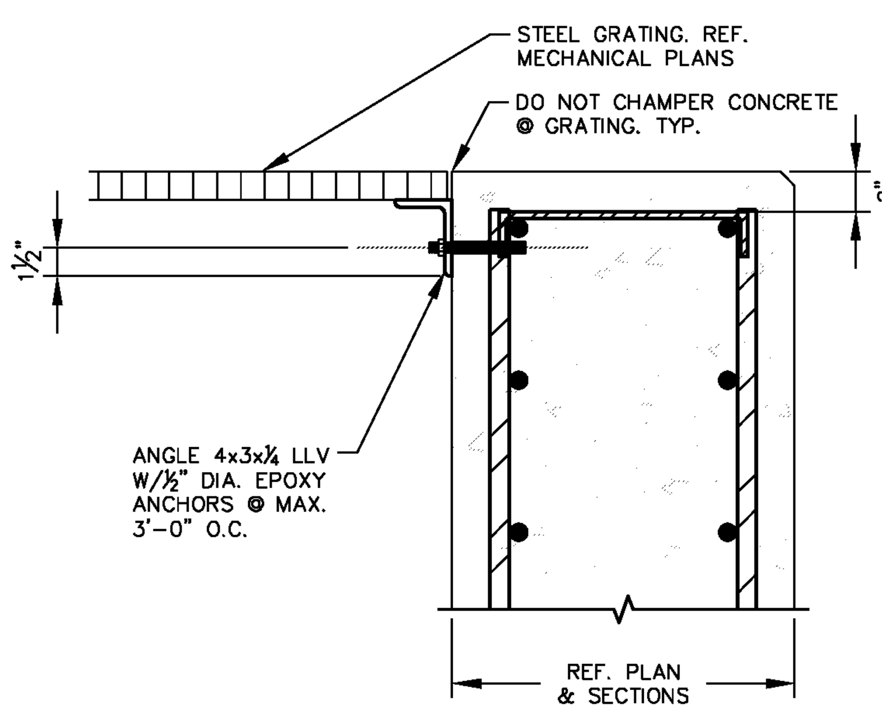

1 / S.1.0 TYP. GRATING SUPPORT DETAIL
SCALE : 1 1/2""=1'-0"

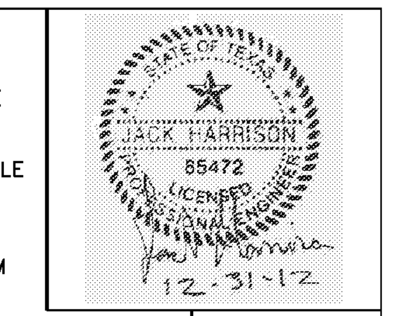

Structural Design Consulting
100 Park Road South
Wimberley, TX 78676
T.B.P.E. FIRM #4886
Office 830-935-2640

Jay Engineering Company, Inc.
P.O. Box 1220
Leander, Texas 78646-1220
Tel. (512) 259-3882 Fax. (512) 259-8016
Texas Registered Engineering Firm F-4780

WRP, OFFSITE LIFT STA. & RECLAIMED WATER PUMP STA.
CRYSTAL FALLS WEST - SEC. 1

STRUCTURAL NOTES & TYP. DETAILS

THE LOOKOUT GROUP

SCALE: AS NOTED DWN: JWH DESIGN: JWH DATE: DEC 2012
DWG. NO. AS NOTED JOB NO. 12782012

no.	date	Revisions	appv.

Sheet
S.1.0

STRUCTURAL NOTES

MASONRY/GROUT:

MG-1 ALL REINFORCED MASONRY WALLS SHALL BE SUBJECTED TO QUALITY CONTROL INSPECTION AS OUTLINED IN IBC SECTION 1704.5.

MG-2 CONCRETE MASONRY UNITS (CMU), SHALL BE NORMAL WEIGHT (125 PCF MINIMUM), GRADE N, TYPE I, CONFORMING TO THE LATEST EDITION OF A.S.T.M. C90. THE AVERAGE COMPRESSIVE STRENGTH OF THREE INDIVIDUAL UNITS SHALL BE 1900 PSI. REFER TO ARCHITECTURAL DRAWINGS AND/OR SPECIFICATIONS FOR UNIT SIZE, FACE, COLOR, JOINTING, ETC.

MG-3 MORTAR SHALL BE TYPE "S", WITH A MINIMUM 28-DAY COMPRESSIVE STRENGTH OF 1800 PSI. MORTAR SHALL BE MIXED AS INDICATED IN IBC, CHAPTER 21, IN PARTICULAR TABLE NO. 2103.8(1).

MG-4 MINIMUM 28-DAY COMPRESSIVE STRENGTH (F'm) OF THE MASONRY WALLS SHALL BE 1500 PSI.

MG-5 PROVIDE VERTICAL REINFORCEMENT IN CMU WALLS AS SHOWN IN THE STRUCTURAL CONTRACT DOCUMENTS. FILL ALL REINFORCED CELLS WITH GROUT. GROUT SHALL BE FINE, WITH A MINIMUM 28-DAY COMPRESSIVE STRENGTH OF 3000 PSI AND SHALL CONFORM TO THE REQUIREMENTS OF IBC, CHAPTER 21, TABLE NO. 2103.12 AND A.S.T.M. C476. GROUT POURS SHALL NOT EXCEED 4 FEET IN HEIGHT UNLESS CLEANOUTS ARE PROVIDED IN THE BOTTOM COURSE OF THE CELL(S) TO BE GROUTED.

MG-6 HORIZONTAL JOINT REINFORCEMENT SHALL CONSIST OF #9 GA WIRE LADDER (TRUSS) TIES SPACED AT 16 INCHES O.C. VERTICALLY.

MG-7 PROVIDE #5 VERTICAL REINFORCING AT ALL CORNERS OF CMU WALLS. PROVIDE 2-#5 VERTICAL BARS (1 PER CMU CELL), AT ALL ENDS OF WALLS, EACH SIDE OF CONTROL JOINTS AND EACH SIDE OF WALL OPENINGS. REINFORCING SHALL BE PLACED IN THE LAST CELLS BEFORE THE DISCONTINUATION OR REDIRECTION OF MASONRY. REFERENCE ARCHITECTURAL CONTRACT DOCUMENTS FOR LOCATION OF CONTROL JOINTS.

MG-8 FOUNDATION DOWELS SHALL EXTEND A MINIMUM OF 30 BAR DIAMETERS INTO THE FOUNDATION AND 40 DIAMETERS INTO THE MASONRY WALL. LAP OR SPLICES OF REINFORCING STEEL IN MASONRY SHALL BE 2'-0" OR 40 BAR DIAMETERS, WHICHEVER IS GREATER. THERE SHALL BE A FOUNDATION DOWEL FOR EACH VERTICAL REINFORCING BAR, UNLESS NOTED OTHERWISE.

MG-9 PROVIDE 8" HIGH BOND BEAM (MINIMUM DEPTH UNLESS NOTED OTHERWISE) AT TOP OF ALL CMU WALLS AND AT MAXIMUM 8'-0" VERTICAL SPACING. REINFORCE BOND BEAM WITH 1-#5 AT BOTTOM OF BEAM. IF BOND BEAMS AT INTERSECTING WALLS MEET AT DIFFERENT ELEVATIONS, EXTEND BOTH BOND BEAMS AROUND INTERSECTING CORNER TO FIRST INTERIOR REINFORCED CELL, BUT NOT LESS THAN 4 FEET.

MG-10 BOND BEAM REINFORCING STEEL FOR INTERIOR AND EXTERIOR WALLS SHALL BE CONTINUOUS THROUGHOUT, EXCEPT AT CONTROL AND ISOLATION JOINTS.

-AT CONTROL JOINTS, INTERMEDIATE BOND BEAM REINFORCING SHALL BE DISCONTINUOUS. REINFORCEMENT IN BOND BEAMS AT FLOOR AND ROOF LEVELS SHALL BE CONTINUOUS.
-AT ISOLATION JOINTS ALL BOND BEAM REINFORCING SHALL BE CUT.

MG-11 BARS AROUND PERIMETER OF OPENINGS SHALL EXTEND NOT LESS THAN 40 BAR DIAMETERS OR 2'-0" WHICHEVER IS LARGER, BEYOND CORNER OF OPENING, EXCEPT AT CONTROL AND ISOLATION JOINTS.

MG-12 WHERE MASONRY ANCHORS (MAS. ANCH.) ARE SHOWN, THEY SHALL CONSIST OF A TWO-COMPONENT RESIN ADHESIVE CONTAINED IN TWO CARTRIDGES, USED IN CONJUNCTION WITH A GALVANIZED METAL SCREEN AND ALL-THREAD ROD. MASONRY ANCHORS SHALL BE INSTALLED AS RECOMMENDED BY THE ANCHOR MANUFACTURER. DO NOT APPLY LOAD TO ANCHOR UNTIL RESIN HAS CURED IN ACCORDANCE WITH RECOMMENDATIONS OF THE MANUFACTURER. ACCEPTABLE MASONRY ANCHORS ARE HILTI HIT C-20 ANCHORING SYSTEM OR APPROVED EQUAL.

PRECAST CONCRETE HOLLOWCORE SLABS

HCS-1 PRECAST ROOF DECK SHALL BE 8 INCH DEEP PRECAST PRE-STRESSED CONCRETE HOLLOW CORE PLANKS DESIGNED AND MANUFACTURED IN ACCORDANCE WITH THE SPECIFICATIONS AND REQUIREMENTS OF THE PRE-STRESSED CONCRETE INSTITUTE AND THE AMERICAN CONCRETE INSTITUTE.

HCS-2 PRECAST FABRICATOR SHALL DESIGN THE REINFORCEMENT IN EACH UNIT TO SUPPORT THE APPLIED SERVICE AND ERECTION LOADS.

HCS-3 CALCULATIONS MUST BE SUBMITTED WITH THE SHOP DRAWINGS. THE SHOP DRAWINGS AND CALCULATIONS SHALL BEAR THE SEAL OF A REGISTERED PROFESSIONAL ENGINEER LICENSED TO PRACTICE IN THE STATE OF TEXAS.

HCS-4 FABRICATOR SHALL LAYOUT UNITS (EXCEPT IN AREAS SPECIFICALLY SHOWN AND DIMENSIONED ON THE DRAWINGS) TO COVER ALL AREAS NOTED AS FRAMED WITH PRECAST UNITS. EXACT WIDTH OF LOAD BEARING SURFACES SHALL BE VERIFIED BY THE CONTRACTOR.

HCS-5 COORDINATE OPENINGS REQUIRED IN UNITS WITH ARCHITECTURAL, MECHANICAL AND ELECTRICAL DRAWINGS.

HCS-6 ALL UNITS SHALL BE DESIGNED BY THE FABRICATOR TO SATISFY THE FOLLOWING CRITERIA:

A. DESIGN FOR THE SUPERIMPOSED LIVE AND DEAD LOADS LISTED IN THE STRUCTURAL NOTES. REFER TO ARCHITECTURAL PLANS FOR LOCATION OF THE VARIOUS AREAS LISTED.

B. LIMIT NET DESIGN CAMBER DUE TO PRESTRESS TO 1"INCLUDING MAXIMUM ALLOWABLE TOLERANCE, CREEP, AND THE WEIGHT OF THE TOPPING.

C. LIVE LOADS SHALL NOT BE REDUCED.

D. THE MAXIMUM FLEXURAL STRESS RESULTING FROM SUPPORT OF TOTAL LOAD SHALL NOT EXCEED 6 TIMES THE SQUARE ROOT OF F'C.

E. LIMIT DIFFERENTIAL CAMBER BETWEEN ADJACENT UNITS OF DIFFERENT SPANS TO 3/4".

F. POWDER DRIVEN ANCHORS SHALL NOT BE USED ON HOLLOW CORE PLANKS. DRILLING AND CORING OF PLANKS IN THE FIELD FOR EXPANSION ANCHORS, CONDUITS, ETC., MAY BE DONE ONLY WITH PRIOR APPROVAL OF THE ENGINEER.

G. HOLLOW CORE PLANKS SHALL BEAR 3" (NOMINAL) ON BEARING SURFACES. PROVIDE HARD PLASTIC SHIMS AT ALL SUPPORTS.

H. DESIGN MODIFICATIONS MAY BE MADE ONLY AS NECESSARY TO MEET FIELD CONDITIONS AND TO ENSURE PROPER FITTING OF THE WORK AND ONLY AS ACCEPTABLE TO THE ENGINEER AND ARCHITECT. MAINTAIN GENERAL DESIGN CONCEPT SHOWN WITHOUT INCREASING OR DECREASING SIZES OF MEMBERS OR ALTERING PROFILES AND ALIGNMENT SHOWN. PROVIDE COMPLETE DESIGN CALCULATIONS AND DRAWINGS PREPARED BY A REGISTERED PROFESSIONAL ENGINEER, LICENSED TO PRACTICE IN THE STATE OF TEXAS, IF DESIGN MODIFICATIONS ARE ANTICIPATED.

ABBREVIATION

&	AND
@	AT
CL	CENTERLINE
X°	DEGREE
ø	DIAMETER
#	NUMBER/POUND
A.B.	ANCHOR BOLT
ADH. ANCH.	ADHESIVE ANCHORS
A.F.F.	ABOVE FINISHED FLOOR
ALT.	ALTERNATE
APPROX.	APPROXIMATE
ARCH.	ARCHITECT/ARCHITECTURAL
B/B	BACK TO BACK
B.P.	BASE PLATE
BT.	BENT
B.L.	BUILDING LINE
B.U.R.	BUILT-UP ROOF
BM.	BEAM
BLK.	BLOCK
B.W.	BOTH WAYS
BOTT.	BOTTOM
BLDG.	BUILDING
BSMT.	BASEMENT
BRG.	BEARING
BTWN.	BETWEEN
CANT.	CANTILEVER
C.I.P	CAST-IN-PLACE
C.J.	CONSTRUCTION JOINT
CLG.	CEILING
CLR.	CLEAR.
CMU	CONCRETE MASONRY UNITS
COL.	COLUMN
CONTR.	CONTRACTOR
CONC.	CONCRETE
CONN.	CONNECTION
CONST.	CONSTRUCTION
CONT.	CONTINUOUS
C.O.S.	CENTERLINE OF SPLICE
DEMO.	DEMOLITION
D.F.	DOUGLAS FIR
DIA.	DIAMETER
DIAG.	DIAGONAL
DIAPH.	DIAPHRAGM
DIM.	DIMENSION
D.J.	DUMMY JOINT
D.L.	DEAD LOAD
DN.	DOWN
DWL.	DOWEL
DWG.	DRAWING
EA.	EACH
E.F.	EACH FACE
E.E	EACH END
E.J.	EXPANSION JOINT
EL.	ELEVATION
ELEV.	ELEVATOR
EQ.	EQUAL
EMB.	EMBEDMENT/EMBEDDED
EQUIP.	EQUIPMENT
E.W.	EACH WAY
EXIST.	EXISTING
EXP.	EXPANSION
EXT.	EXTERIOR
EXTE	EXTERIOR END
EXP. ANCH.	EXPANSION ANCHORS
FDN.	FOUNDATION
F.D.	FLOOR DRAIN
F.S.	FAR SIDE
FIN.	FINISH
FLR.	FLOOR
F.O.C.	FACE OF CONCRETE
FT.	FOOT OR FEET
FTG.	FOOTING
FUT.	FUTURE
F.V.	FIELD VERIFY
GA.	GAGE
GALV.	GALVANIZED
GR.	GRADE
HK.	HOOK
HORIZ.	HORIZONTAL
HGT.	HEIGHT
H.S.	HIGH STRENGTH(BOLT)
H.C.A.	HEADED CONCRETE ANCHOR
I.D.	INSIDE DIAMETER
I.F.	INSIDE FACE
IN.	INCH
INV.	INVERTED
INT.	INTERIOR
INTE	INTERIOR END
JST.	JOIST
JT.	JOINT

K	KIP(THOUSAND POUNDS)
L	ANGLE
LBS.	POUND
LE	LEFT END
LF	LINEAR FOOT
LLH	LONG LEG HORIZONTAL
LGTH.	LENGTH
LG.	LONG
LVL.	LEVEL
LLV	LONG LEG VERTICAL
LLYP	LONG LEAF YELLOW PINE
MAX.	MAXIMUM
MECH.	MECHANICAL
MEZZ.	MEZZANINE
MFR.	MANUFACTURER
MID.	MIDDLE
MIN.	MINIMUM
MISC.	MISCELLANEOUS
M.O.	MASONRY OPENING
MAS.	MASONRY
NS	NEAR SIDE
N.I.C.	NOT IN CONTRACT
NOM.	NOMINAL
N.T.S.	NOT TO SCALE
O.C.	ON CENTER
O.D.	OUTSIDE DIAMETER
O.H.	OPPOSITE HAND
O/O	OUT TO OUT
O.F.	OUTSIDE FACE
OPNG.	OPENING
OPP.	OPPOSITE
P/C	PRECAST
PH.	PENTHOUSE
PLYWD.	PLYWOOD
PMU	PRECAST MASONRY UNITS
PREFAB.	PREFABRICATED
P.T.	PRESSURE TREATED
PSF	POUND PER SQUARE FOOT
PSI	POUND PER SQUARE INCH
PT.	POINT
PL	PLATE
R	RISER
RAD.	RADIUS
R.D.	ROOF DRAIN
REF.	REFERENCE
REINF.	REINFORCING/REINFORCED
REQD.	REQUIRED
R.E.	RIGHT END
R.O.	ROUGH OPENING
SPAC.	SPACES/SPACING
SCHED.	SCHEDULE
SECT.	SECTION
SHT.	SHEET/SHEATING
SIM.	SIMILAR
S.O.G	SLAB ON GRADE
SPEC.	SPECIFICATION
S.J.	SAWED JOINT
SL.	SLOPE
SLV	SLEEVE
STIFF.	STIFFENERS
STIRR.	STIRRUPS
SQ.	SQUARE
STD.	STANDARD
STL.	STEEL
STR.	STAIR
STRUCT.	STRUCTURE/STRUCTURAL
SUPT.	SUPPORT
SUSP.	SUSPENDED
SYM.	SYMMETRICAL
S.Y.P.	SOUTHERN YELLOW PINE
T	TREAD
T&B	TOP AND BOTTOM
T&G	TONGUE & GROOVE
THK.	THICK/THICKNESS
T.O.B.	TOP OF BEAM
T.O.C.	TOP OF CONCRETE
T.O.J.	TOP OF JOIST
T.O.S.	TOP OF STEEL
T.O.W.	TOP OF WALL
TOPP.	TOPPING
TYP.	TYPICAL
U.N.O.	UNLESS NOTED OTHERWISE
VERT.	VERTICAL
W/.	WITH
WD.	WOOD
W.P.	WORK POINT
W/O	WITHOUT
WT.	WEIGHT
W.W.F.	WELDED WIRE FABRIC

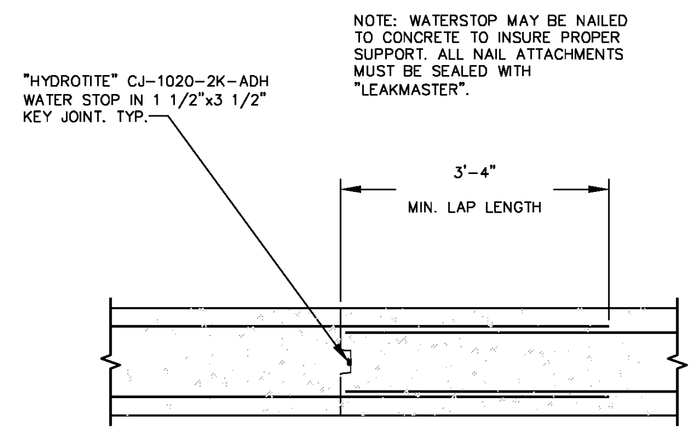

1 S.2.0 TYP. WALL CONST. JT. DETAIL
SCALE : 3/4"=1'-0"

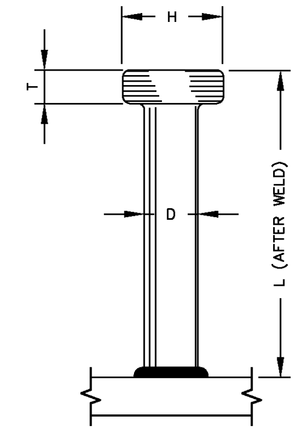

D	H	L BEFORE WELD	L AFTER WELD	T MIN.
1/4	1/2	2 11/16	2 9/16	3/16
3/8	3/4	4 1/8	4	9/32
1/2	1	5 5/16	5 3/16	9/32
5/8	1 1/4	6 9/16	6 3/8	9/32
3/4	1 1/4	7 3/16	7	3/8
7/8	1 3/8	8 3/16	8	3/8

STUDS SHALL BE AUTOMATICALLY END WELDED IN THE SHOP OR FIELD. STUDS ARE TO BE WELDED ON CENTERS AS SHOWN ON THE DWGS.

2 S.2.0 TYP. HEADED CONCRETE ANCHOR DETAIL
SCALE : 3/4"=1'-0"

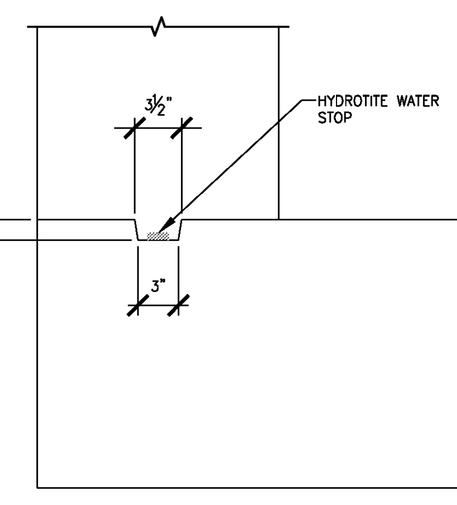

3 S.5.0 TYP. WALL BASE KEYWAY DETIAL
SCALE : 1 1/2""=1'-0"

REINFORCING LAP LENGTH SCHEDULE

BAR SIZE	f'c = 3.0 KSI, fy = 60.0 ksi: LAP LENGTH (IN.) TOP *	LAP LENGTH (IN.) OTHERS	EMBED LENGTH (IN.) TOP *	EMBED LENGTH (IN.) OTHERS	f'c = 4.0 KSI, fy = 60.0 ksi: LAP LENGTH (IN.) TOP *	LAP LENGTH (IN.) OTHERS	EMBED LENGTH (IN.) TOP *	EMBED LENGTH (IN.) OTHERS
3	19	16	14	12	17	16	13	12
4	25	19	19	15	23	17	17	13
5	31	24	24	18	28	22	22	17
6	43	33	33	26	40	30	30	24
7	59	45	45	35	54	41	41	32
8	77	60	60	46	71	54	54	42
9	98	75	75	58	89	69	69	53
10	124	96	96	74	114	87	87	67

4 S.2.0 TABLE "A" REINF. LAP SCHEDULE
SCALE : 3/4"=1'-0"

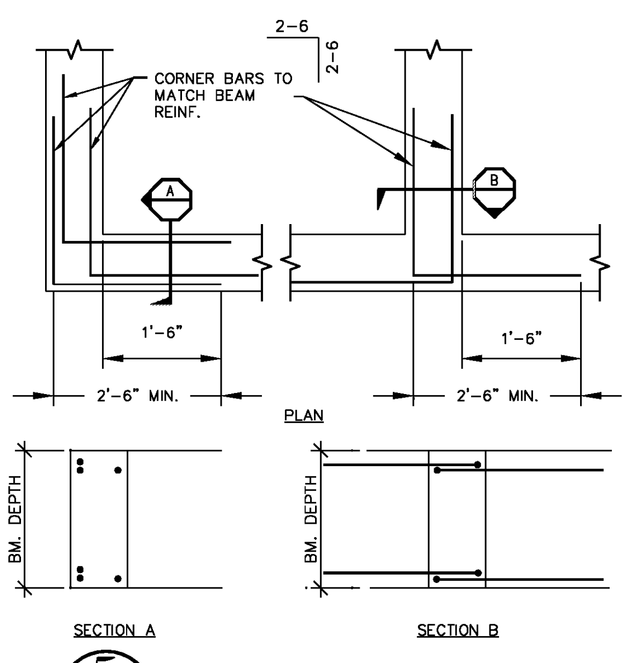

5 S.2.0 TYP. CORNER BAR DETAIL
SCALE : 3/4"=1'-0"

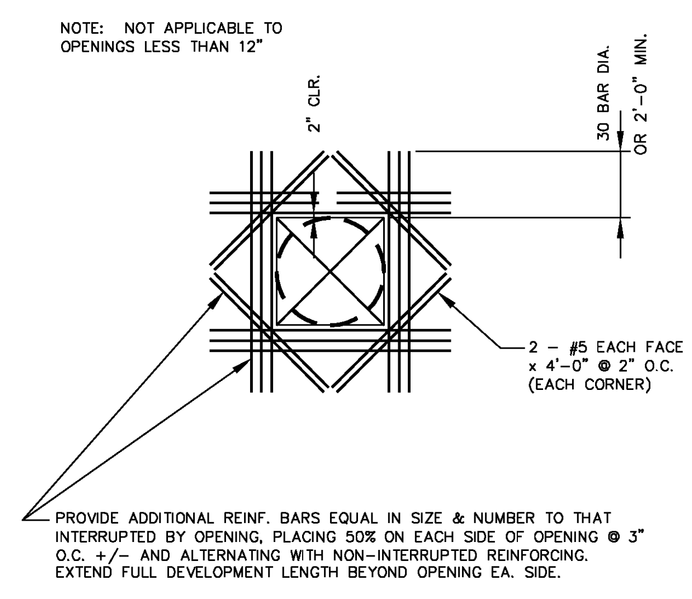

6 S.2.0 TYP. SLAB OPENING DETAIL
SCALE : 3/4"=1'-0"

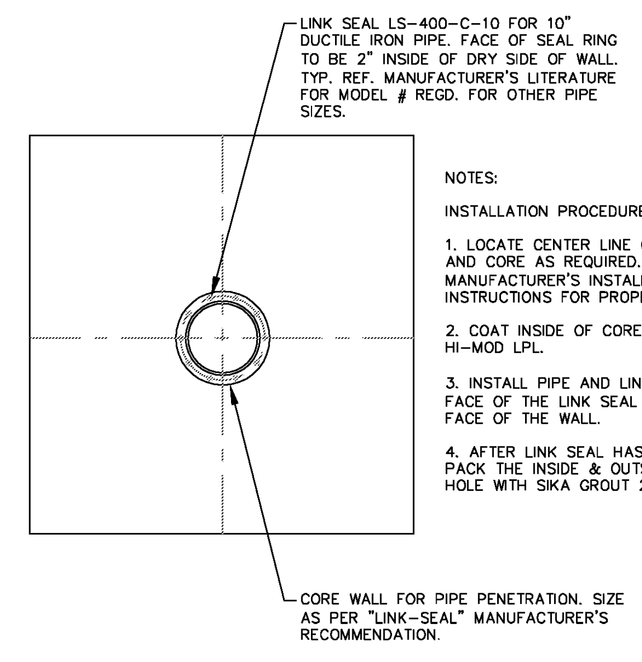

NOTES:

INSTALLATION PROCEDURE:

1. LOCATE CENTER LINE OF PIPE ON WALL AND CORE AS REQUIRED. REF. LINK SEAL MANUFACTURER'S INSTALLATION INSTRUCTIONS FOR PROPER CORE SIZE.

2. COAT INSIDE OF CORE WITH SIKADUR 32, HI-MOD LPL.

3. INSTALL PIPE AND LINK SEAL W/ THE FACE OF THE LINK SEAL 3" INSIDE THE FACE OF THE WALL.

4. AFTER LINK SEAL HAS BEEN INSTALLED PACK THE INSIDE & OUTSIDE OF THE CORE HOLE WITH SIKA GROUT 212.

7 S.2.0 CORED OPENING DETAIL
SCALE : 3/4"=1'-0"

STATE OF TEXAS
JACK HARRISON
85472
LICENSED
PROFESSIONAL ENGINEER
12-31-12

Structural Design Consulting
100 Park Road South
Kerrville, TX 78028
T.B.P.E. FIRM #4888
Office 830-935-2840

Jay Engineering Company, Inc.
P.O. Box 1220
Leander, Texas 78646-1220
Tel: (512) 259-3882 Fax: (512) 259-8016
Texas Registered Engineering Firm F-4780

WRP, OFFSITE LIFT STA & RECLAIMED WATER PUMP STA.
CRYSTAL FALLS WEST - SEC. 1

STRUCTURAL NOTES, ABBREV. & TYP. DETAILS

THE LOOKOUT GROUP

SCALE: AS NOTED | DWN: JWH | DESIGN: JWH | DATE: DEC 2012
DWG. NO. AS NOTED | JOB NO. 12782012

No.	date	Revisions	sppv.

Sheet
S.2.0

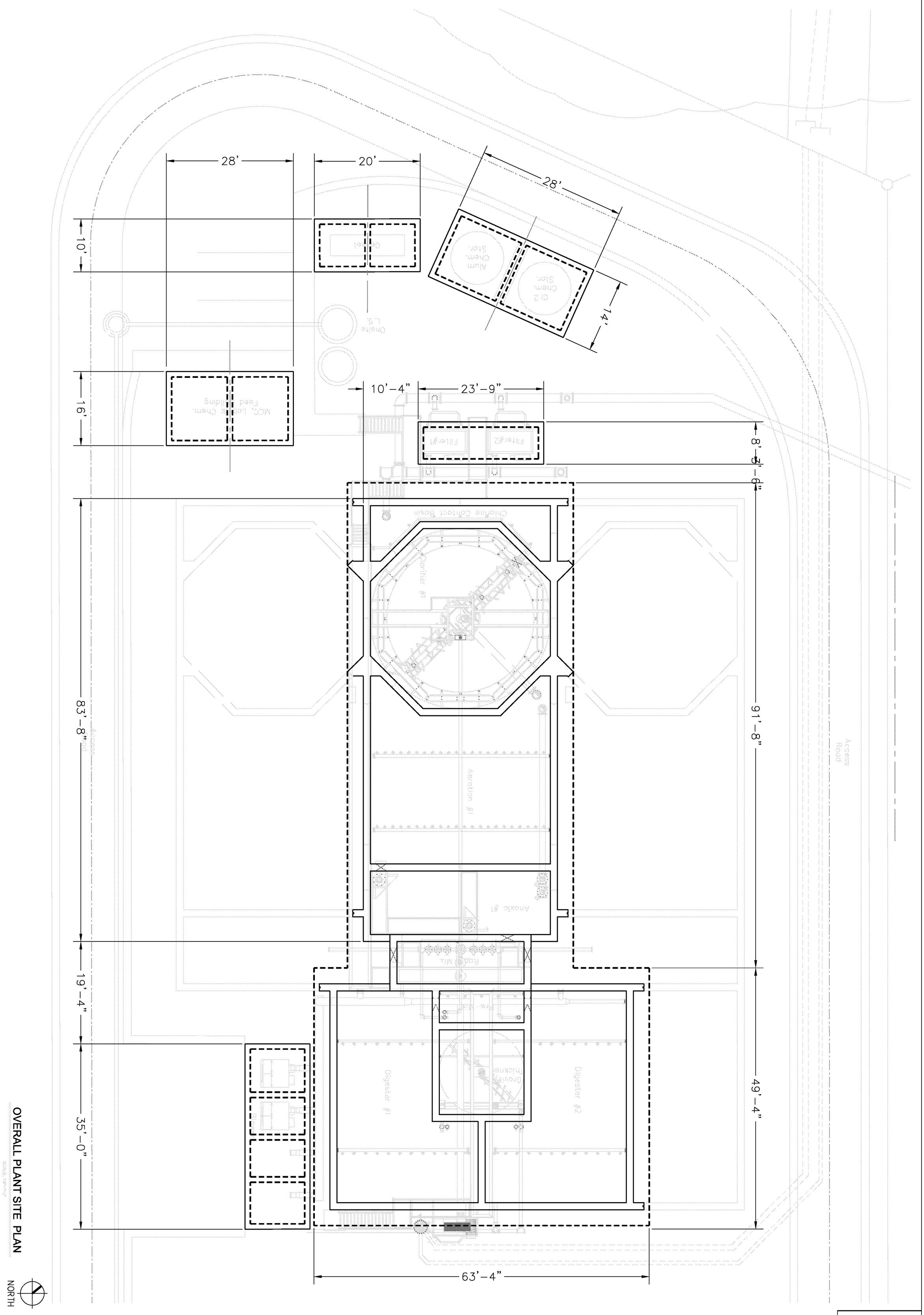

OVERALL PLANT SITE PLAN

no.	date	Revisions	appv.

Sheet **S.3.0**

THE LOOKOUT GROUP

SCALE: AS NOTED DWN: JWH DESIGN: JWH DATE: DEC 2012

DWG. NO. AS NOTED JOB NO. 12782012

WRP, OFFSITE LIFT STA. & RECLAIMED WATER PUMP STA.
CRYSTAL FALLS WEST - SEC. 1

OVERALL PLANT SITE PLAN

Jay Engineering Company, Inc.
P.O. Box 1220
Leander, Texas 78646-1220
Tel. (512) 259-3882 Fax. (512) 259-8016

Texas Registered Engineering Firm F-4780

Structural Design Consulting
100 Park Road South
Wimberley, TX 78676
T.B.P.E. FIRM #4888
Office 830-935-2640

STATE OF TEXAS
JACK HARRISON
55472
LICENSED
PROFESSIONAL ENGINEER
12-31-12

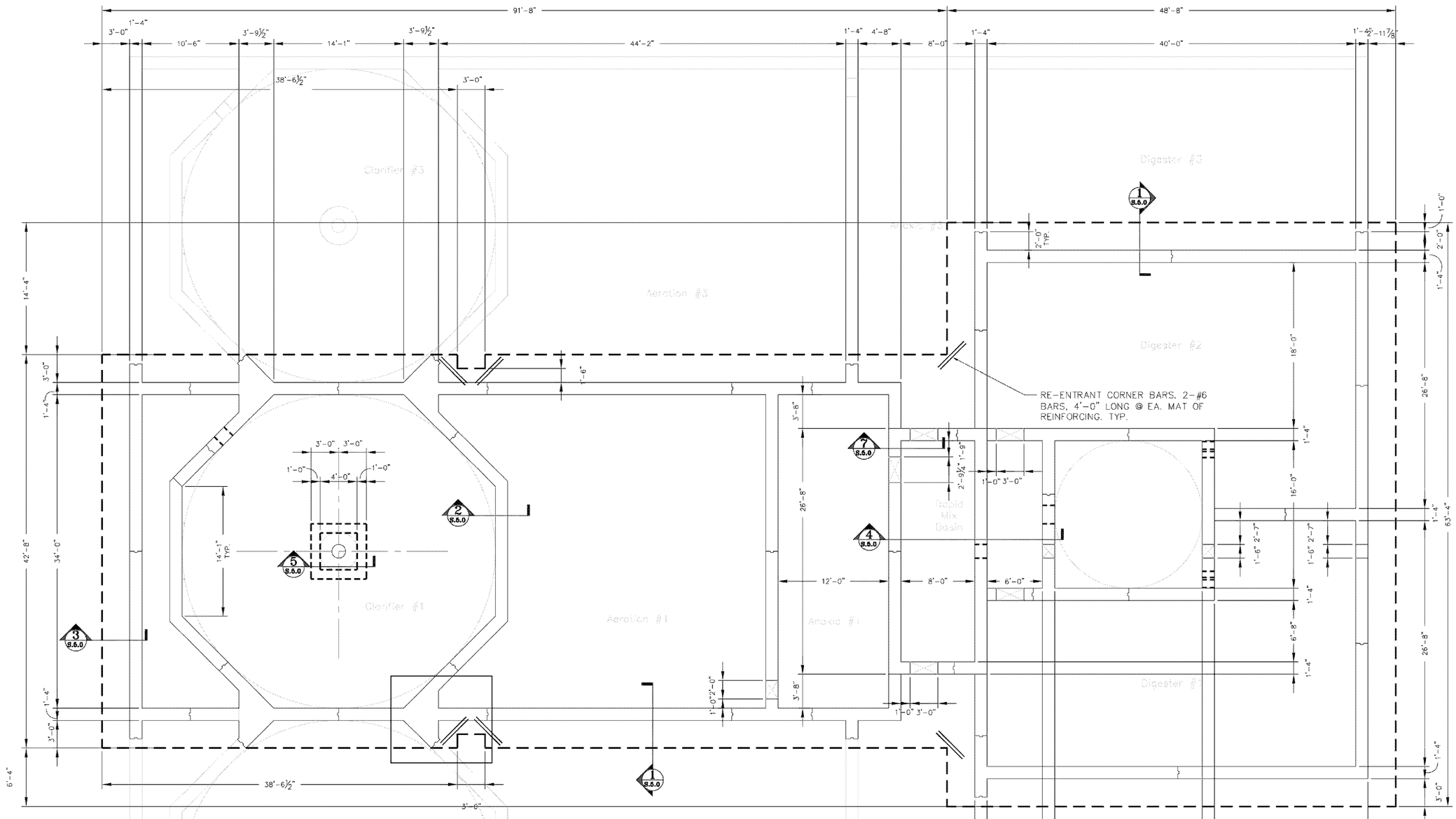

PLAN NOTES:

1. REF. MECHANICAL DRAWINGS FOR THE ELEVATION OF ALL STRUCTURAL ITEMS INCLUDING TOP OF SLAB, TOP OF WALL, TOP OF WALL OPENING, ETC.
2. RECOMMENDED WALL CONSTRUCTION JOINT LOCATIONS ARE SHOWN ON THIS PLAN AS ~ . THE CONTRACTOR MAY PROPOSE ALTERNATE JOINT LOCATIONS FOR APPROVAL. INDIVIDUAL WALL SEGMENTS MUST NOT BE LONGER THAN 30'. ALL CAST WALL SEGMENTS MUST BE ALLOWED TO CURE, WITH THE WALL FORMS IN PLACE, FOR A MINIMUM OF 72 HOURS PRIOR TO CASTING ANY ADJOINING WALL SEGMENTS. WALL TOP MUST BE KEPT COVERED AND WET DURING CURING PROCESS.
3. ALL FLUID CONTAINING STRUCTURE SLABS MUST BE WET CURED FOR A MINIMUM OF 72 HOURS.
4. LEAK TESTING – CONTRACTOR SHALL PERFORM A FULL HYDROSTATIC HEAD LEAK TEST ON EACH BASIN OF THE STRUCTURE AND REPORT THE RESULTS TO THE OWNER AND THE ENGINEER OF RECORD. EACH INDIVIDUAL BASIN MUST BE TESTED WITH ALL ADJOINING BASINS EMPTY. ALL LEAKS DETECTED SHALL BE SEALED BY EPOXY INJECTION PERFORMED BY A CERTIFIED TECHNICIAN. ALL LEAK TESTING MUST BE PERFORMED PRIOR TO BACKFILLING AROUND STRUCTURE. RE-TEST AFTER ALL REPAIRS. VISABLE MOISTURE WILL BE CONSIDERED A LEAK. SUBMIT EPOXY INJECTION PROCEDURE DETAILS FOR APPROVAL PRIOR TO PEERFORMING REPAIRS.

MAIN PLANT FOUNDATION PLAN

NORTH

STATE OF TEXAS
JACK HARRISON
85472
LICENSED
PROFESSIONAL ENGINEER
12-31-12

Structural Design Consulting
100 Park Road South
Winnsboro, TX 75576
T.B.P.E. FIRM #4888
Office 830-935-2640

Jay Engineering Company, Inc.
P.O. Box 1220
Lewisville, Texas 75646-1220
Tel: (972) 219-3812 Fax: (972) 209-9016
Texas Registered Engineering Firm F-4780

WRP, OFFSITE LIFT STA. & RECLAIMED WATER PUMP STA.
CRYSTAL FALLS WEST - SEC. 1

MAIN PLANT FOUNDATION PLAN

THE LOOKOUT GROUP

SCALE: AS NOTED DWN: JWH DESIGN: JWH DATE: DEC 2012
DWG. NO. AS NOTED JOB NO. 12782012

no.	date	Revisions	approv.

Sheet
S.4.0

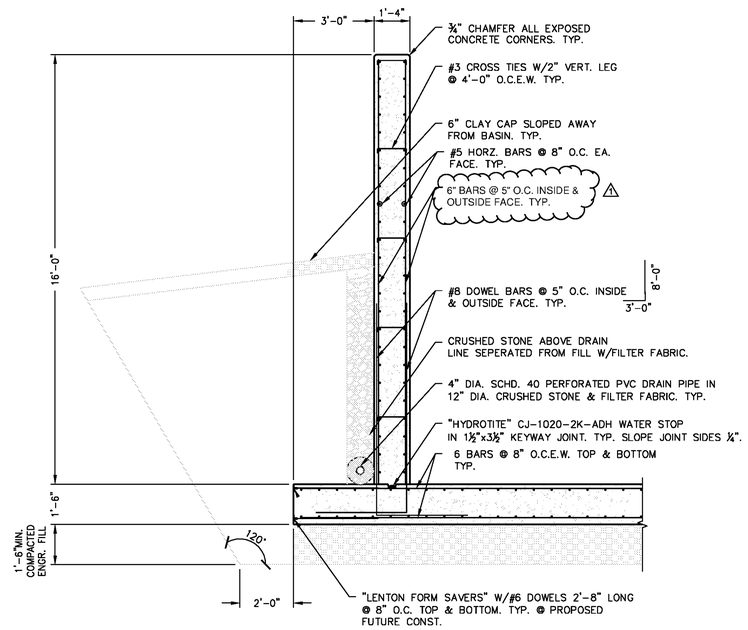

1 S.5.0 EXTERIOR BASIN WALL SECTION
SCALE : 3/8"=1'-0"

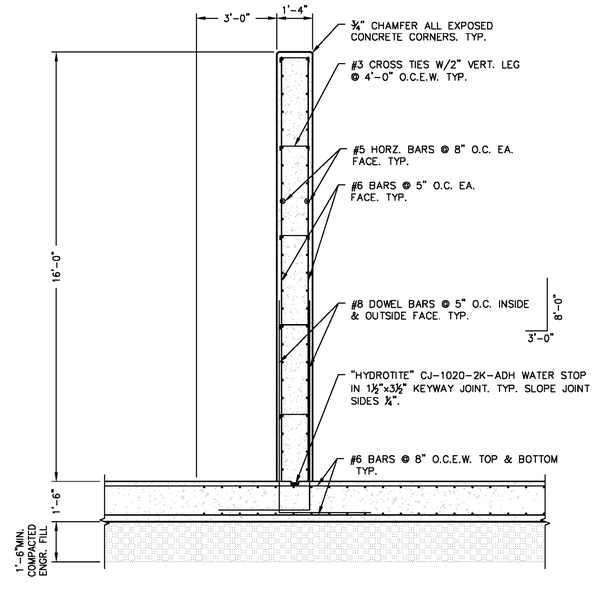

2 S.5.0 INTERIOR BASIN WALL SECTION
SCALE : 3/8"=1'-0"

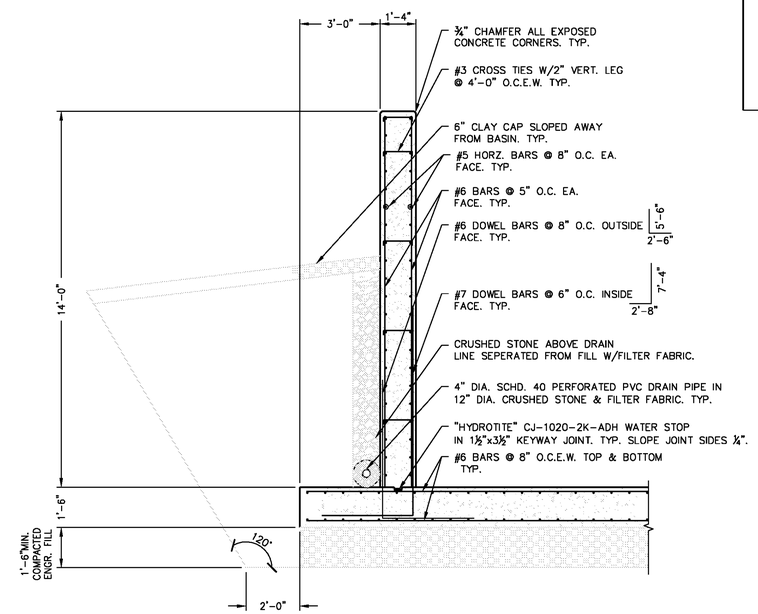

3 S.5.0 CHLORINE BASIN WALL SECTION
SCALE : 3/8"=1'-0"

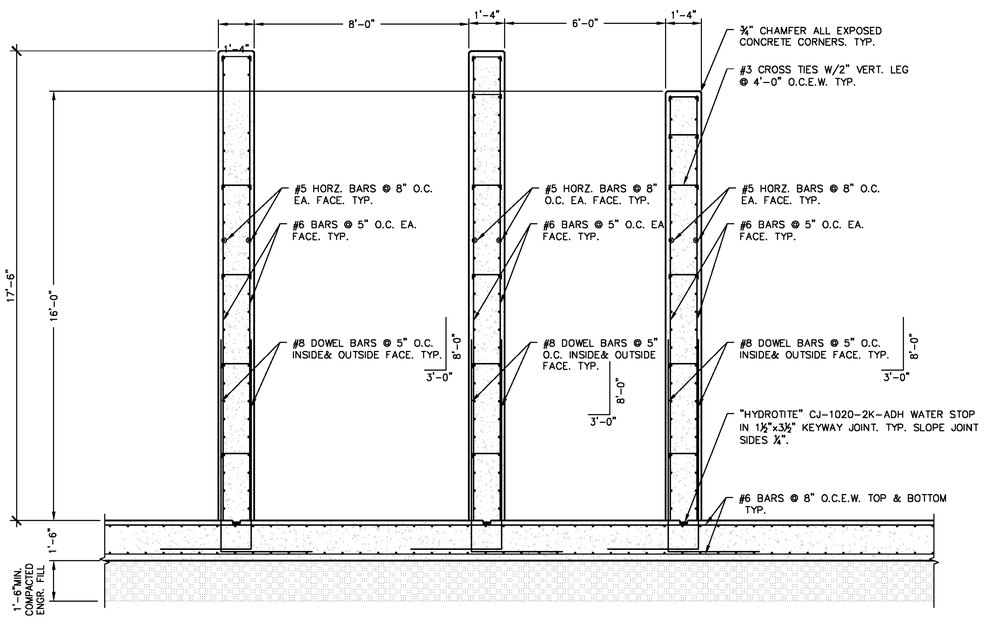

1

4 S.5.0 RAPID MIX & PRE MIX BASIN SECTION
SCALE : 3/8"=1'-0"

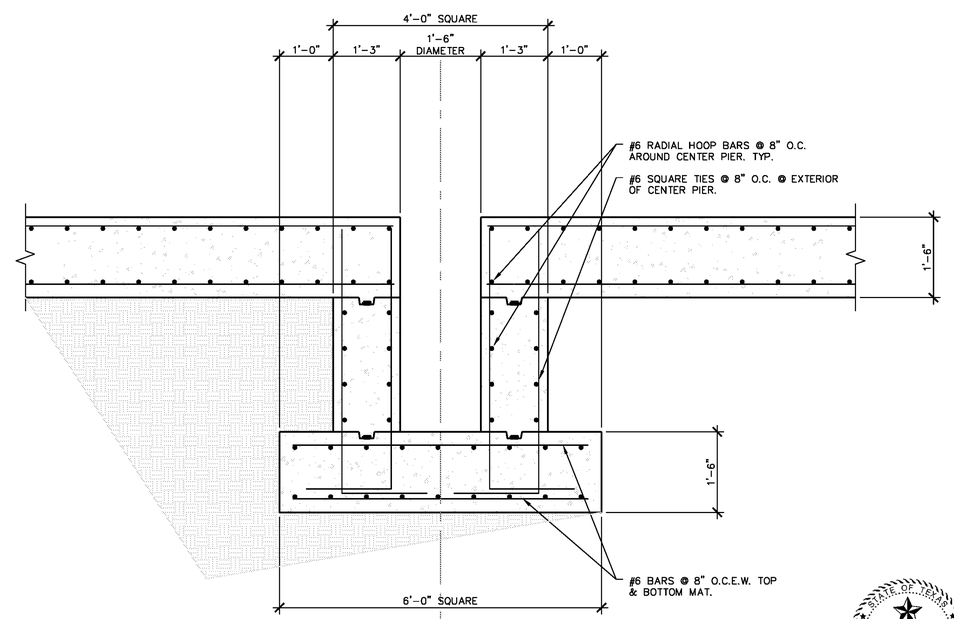

5 S.5.0 CENTER PIER SECTION
SCALE : 3/4"=1'-0"

STATE OF TEXAS
JACK HARRISON
85472
LICENSED
12-31-12

STATE OF TEXAS
FRANK T. PHELAN
93874
LICENSED
PROFESSIONAL ENGINEER
11/25/13

Structural Design Consulting
100 Park Road South
Kimberley, TX 78676
T.B.P.E. FIRM #4888
Office 830-935-2840

Jay Engineering Company, Inc.
P.O. Box 1220
Leander, Texas 78646-1220
Tel. (512) 259-3882 Fax. (512) 259-8016
Texas Registered Engineering Firm F-4780

WRP, OFFSITE LIFT STA. & RECLAIMED WATER PUMP STA.
CRYSTAL FALLS WEST - SEC. 1

WALL SECTIONS & DETAILS

THE LOOKOUT GROUP

SCALE: AS NOTED DWN: JWH DESIGN: JWH DATE: DEC 2012
DWG. NO. AS NOTED JOB NO. 12782012

no.	date	Revisions	appv.
1	11/13	Text Revisions	FTP

Sheet
S.5.0

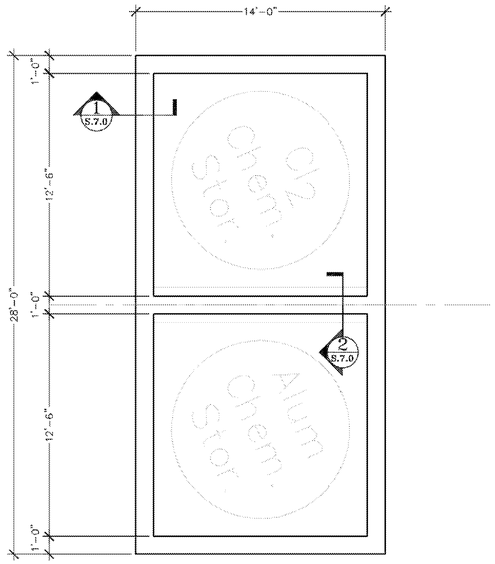

NORTH

1 S.6.0 CHEMICAL STORAGE FOUNDATION PLAN
SCALE : 1/4"=1'-0"

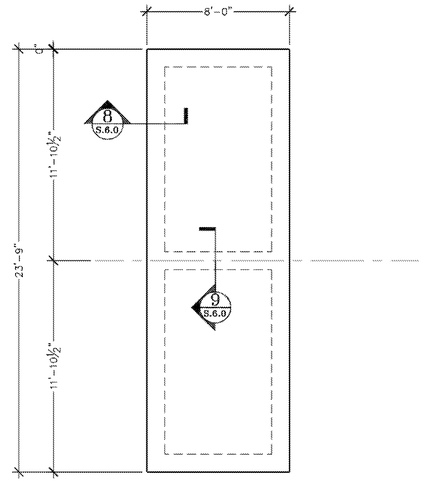

NORTH

2 S.6.0 FILTER PAD FOUNDATION PLAN
SCALE : 1/4"=1'-0"

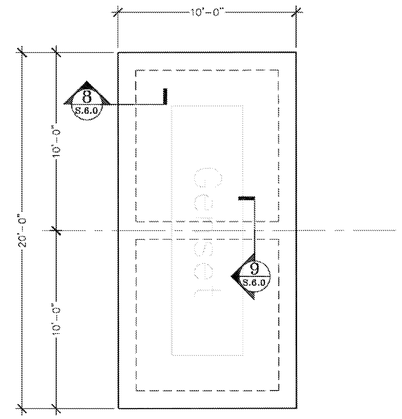

NORTH

3 S.6.0 GEN-SET FOUNDATION PLAN
SCALE : 1/4"=1'-0"

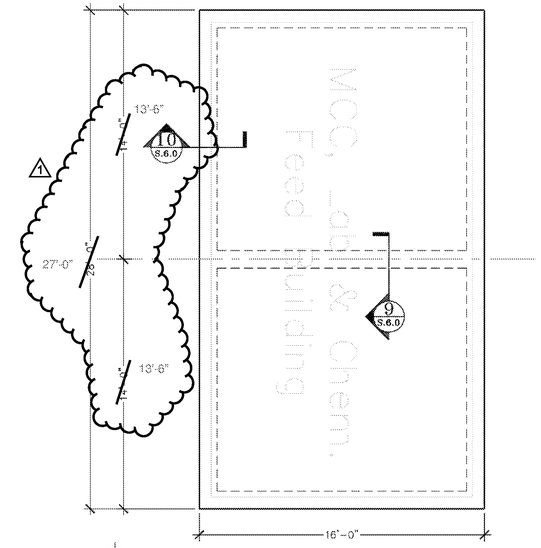

NORTH

4 S.6.0 MCC/LAB FOUNDATION PLAN
SCALE : 1/4"=1'-0"

NOTE: ACHIEVE SLOPE TO DRAIN OF ¼"/FT. MIN. ON HOLLOW CORE PLANK ROOF W/TAPERED INSULATION. TYP.

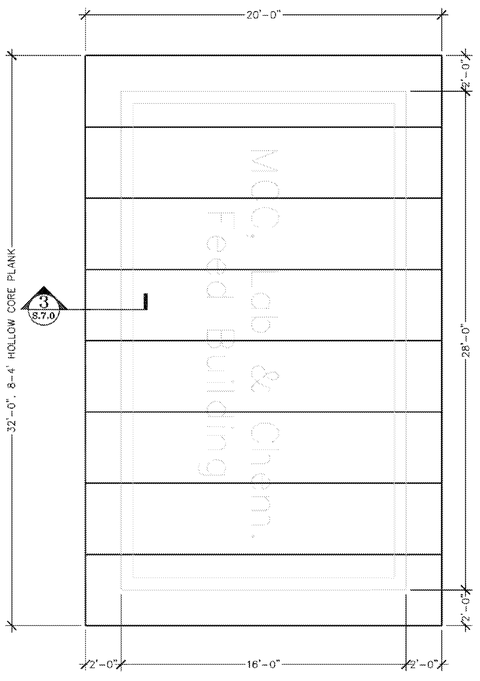

NORTH

5 S.6.0 MCC/LAB ROOF PLAN
SCALE : 1/4"=1'-0"

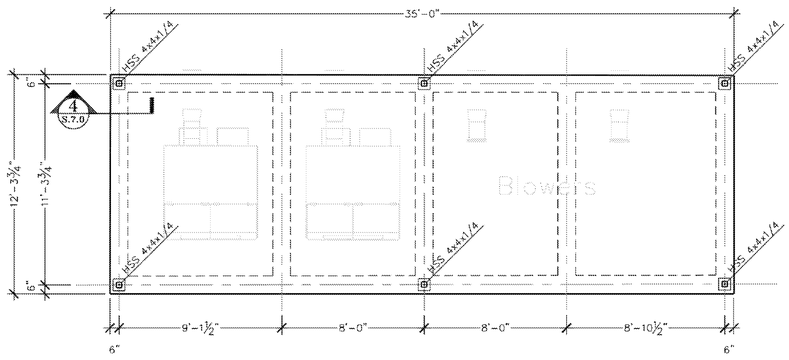

NORTH

6 S.6.0 BLOWERS FOUNDATION PLAN
SCALE : 1/4"=1'-0"

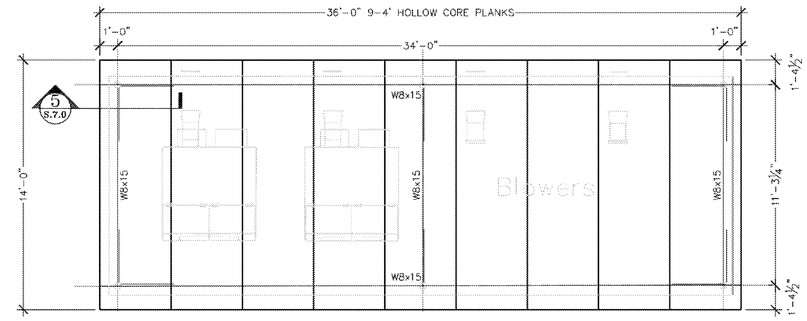

NORTH

7 S.6.0 BLOWERS ROOF PLAN
SCALE : 1/4"=1'-0"

NOTE: BOTTOM OF ALL EXTERIOR BEAMS TO BE A MINIMUM OF 12" BELOW FINISH GRADE.

NOTE: IF BEAM DEPTH IS 30" OR GREATER ADD #4 HORZ. BARS @ 12" O.C. VERT. EA. FACE.

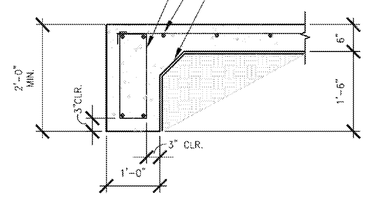

8 S.6.0 TYP. EXTERIOR BEAM
SCALE : 3/4"=1'-0"

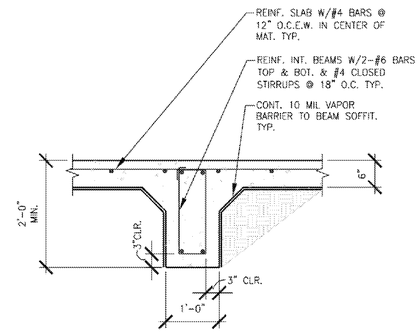

9 S.6.0 TYP. INTERIOR BEAM
SCALE : 3/4"=1'-0"

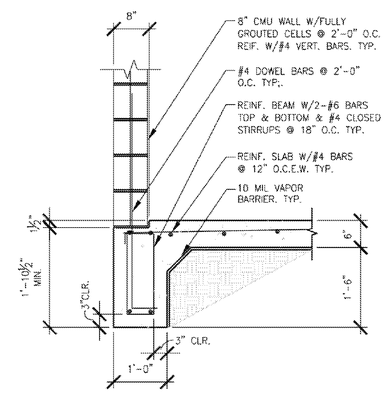

10 S.6.0 TYP. INTERIOR BEAM
SCALE : 3/4"=1'-0"

Structural Design Consulting
100 Park Road South
Winnsboro, TX 75676
T.B.P.E. FIRM #4988
Office 830-835-2040

Jay Engineering Company, Inc.
P.O. Box 1220
Leander, Texas 78646-1220
Tel (512) 259-5802 Fax (512) 259-8016
Texas Registered Engineering Firm F-4780

WRP, OFFSITE LIFT STA. & RECLAIMED WATER PUMP STA.
CRYSTAL FALLS WEST - SEC. 1

MECHANICAL FOUNDATION & ROOF FRAMING PLANS & DETAILS

THE LOOKOUT GROUP

SCALE: AS NOTED | DWN: JWH | DESIGN: JWH | DATE: DEC 2012
DWG. NO. AS NOTED | JOB NO. 12782012

NO.	DATE	Revisions	Dim. Revs.	FTP
1	01/14			

Sheet
S.6.0

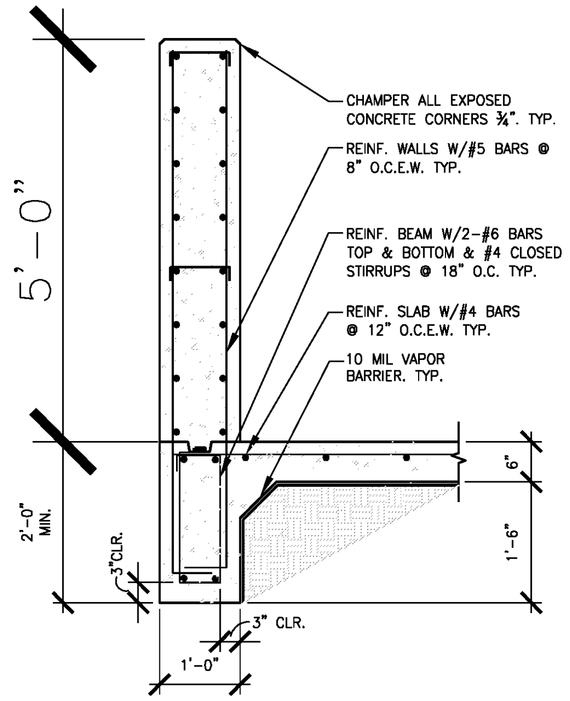

1 S.7.0 EXTERIOR BEAM @ CHEM. STORAGE
SCALE : 3/4"=1'-0"

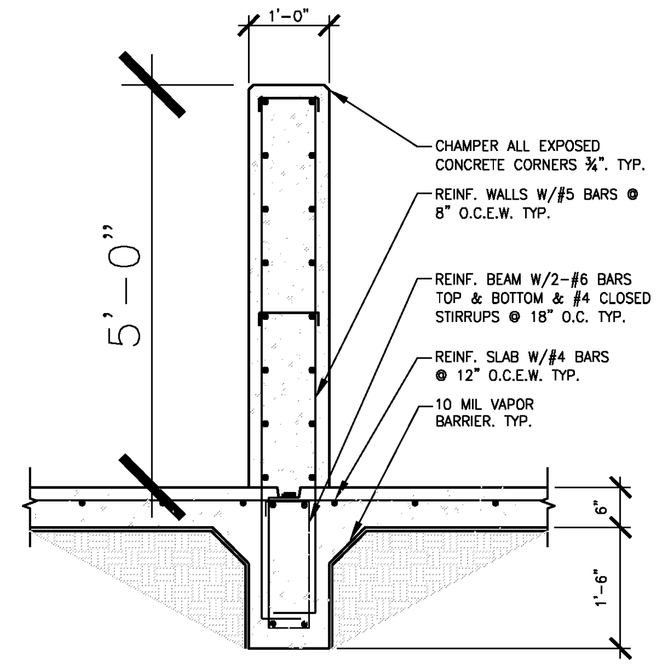

2 S.7.0 EXTERIOR BEAM @ CHEM. STORAGE
SCALE : 3/4"=1'-0"

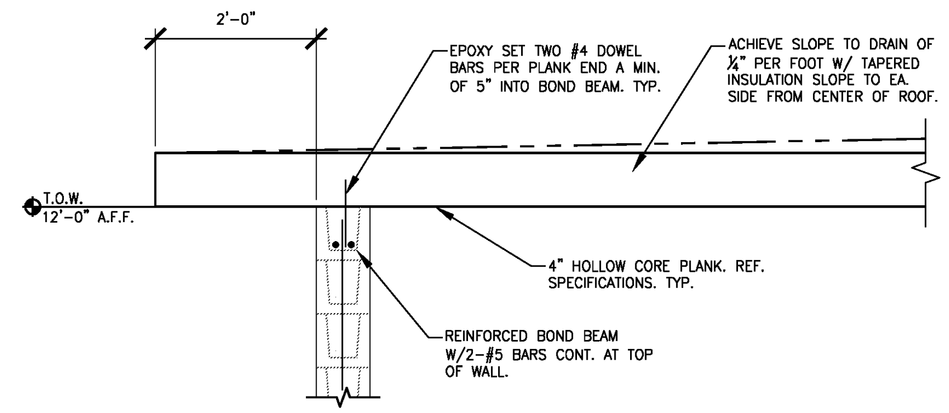

3 S.7.0 HOLLOW CORE PLANK ROOF DETAIL
SCALE : 3/4"=1'-0"

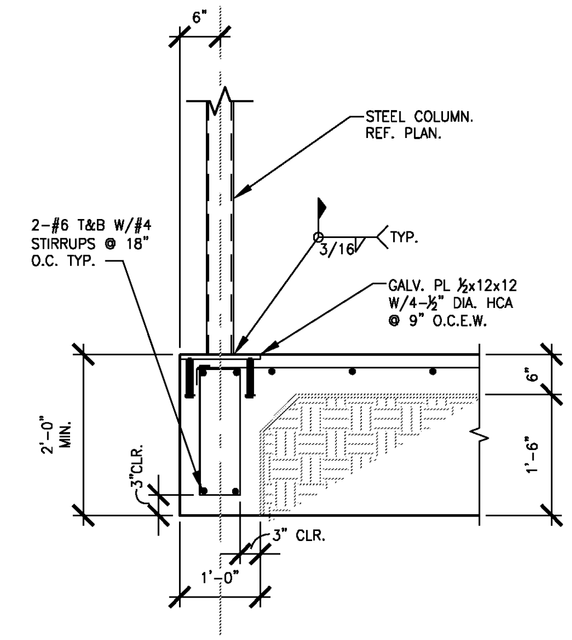

4 S.7.0 EXT. BEAM DETAIL
SCALE : 3/4"=1'-0"

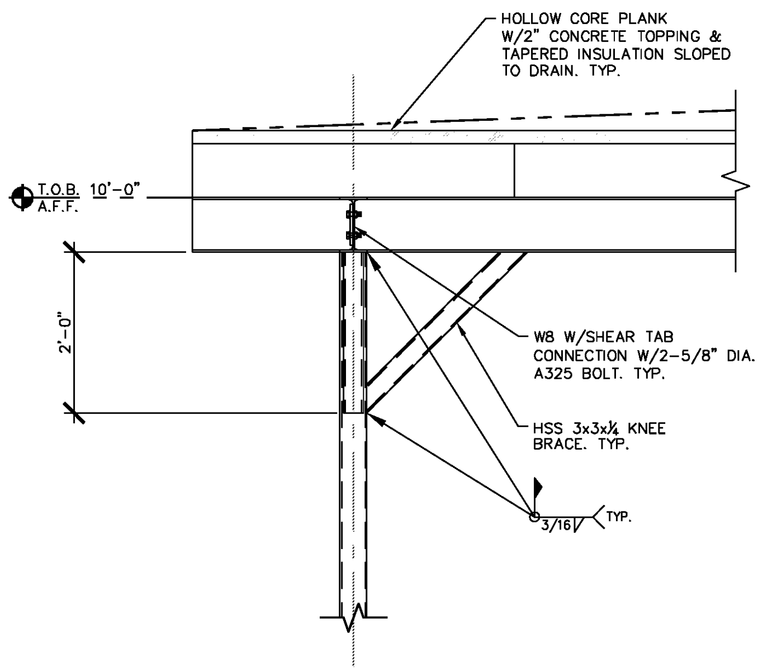

5 S.7.0 BLOWER ROOF DETAIL
SCALE : 3/4"=1'-0"

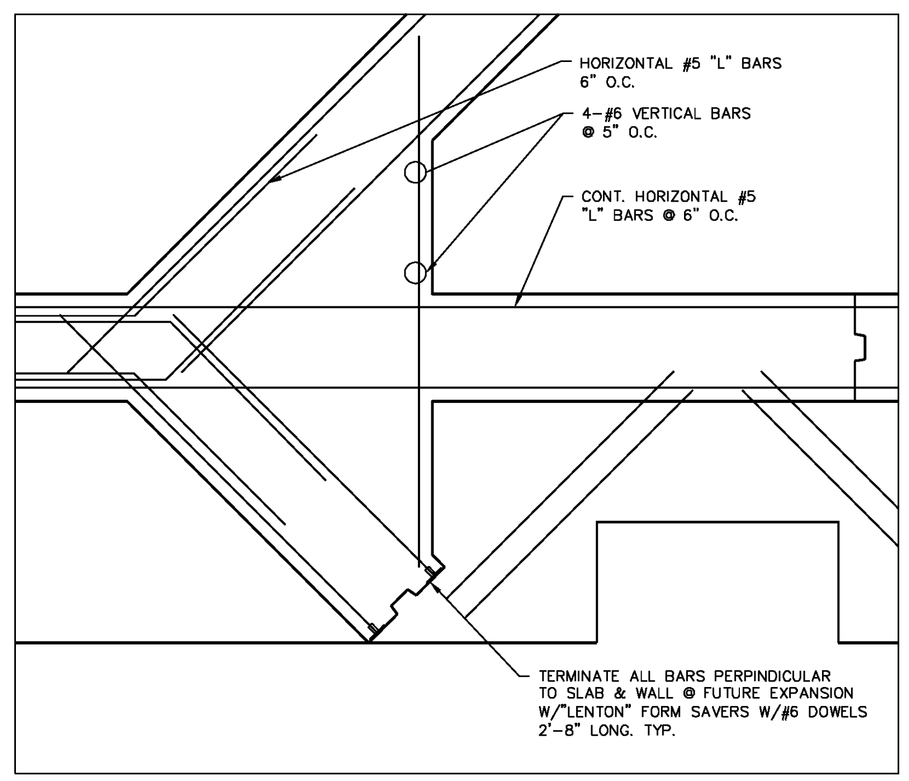

6 S.7.0 CLARIFIER WALL CORNER FRAMING DETAIL
SCALE : 3/4"=1'-0"

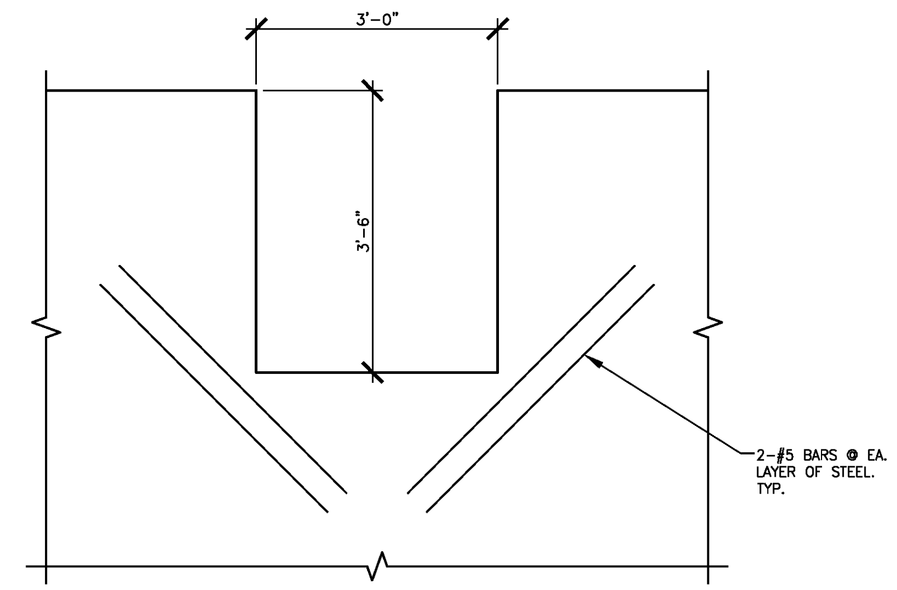

7 S.7.0 TOP OF WALL OPENING DETAIL
SCALE : 3/4"=1'-0"

Structural Design Consulting
100 Park Road South
Kimberly, TX 78676
T.B.P.E. FIRM #4688
Office 830-935-2840

Jay Engineering Company, Inc.
P.O. Box 1220
Leander, Texas 78646-1220
Tel: (512) 259-3882 Fax: (512) 259-8016
Texas Registered Engineering Firm F-4780

WRP, OFFSITE LIFT STA. & RECLAIMED WATER PUMP STA.
CRYSTAL FALLS WEST - SEC. 1

SECTIONS & DETAILS

THE LOOKOUT GROUP

SCALE: AS NOTED DWN: JWH DESIGN: JWH DATE: DEC 2012
DWG. NO. AS NOTED JOB NO. 12782012

Sheet
S.7.0

no.	date	Revisions	appv.

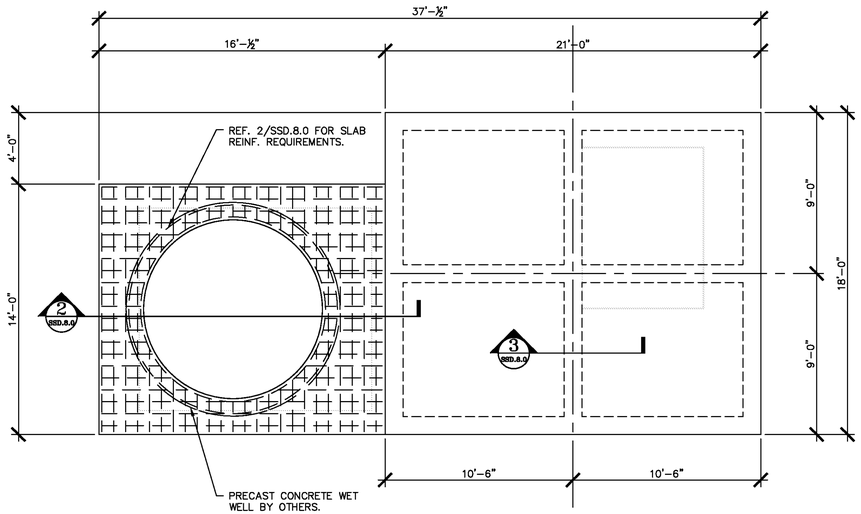

1 SSD.8.0 LIFT STATION & FILTER FOUNDATION PLAN

SCALE : 1/4"=1'-0"

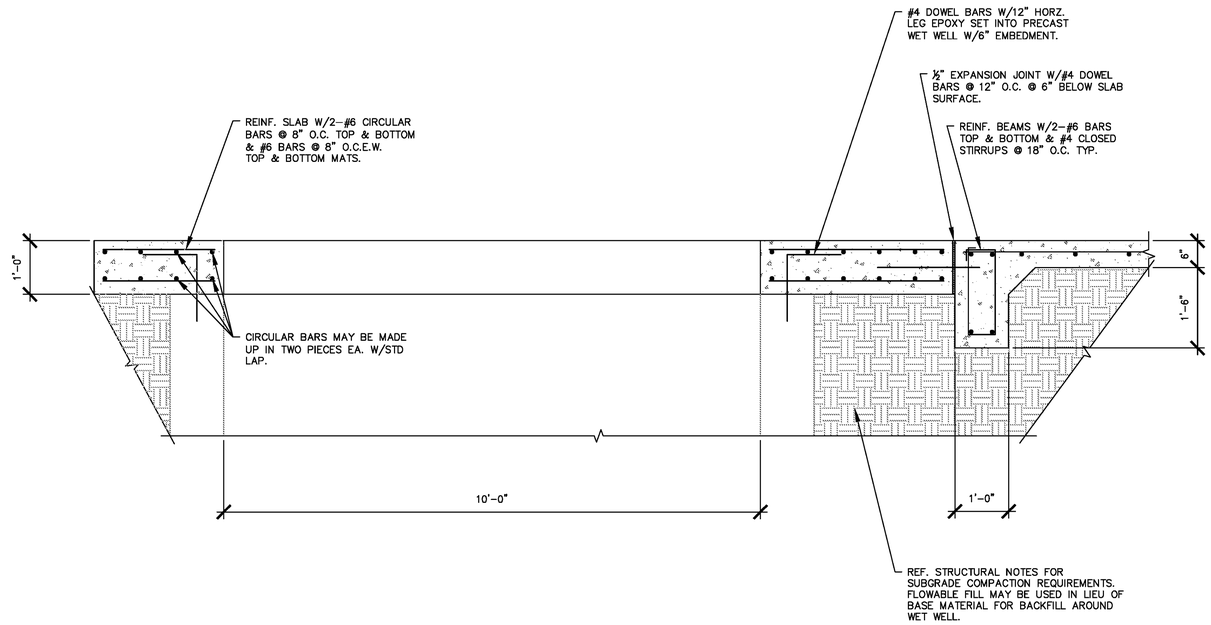

2 SSD.8.0 FOUNDATION SECTION

SCALE : 3/4"=1'-0"

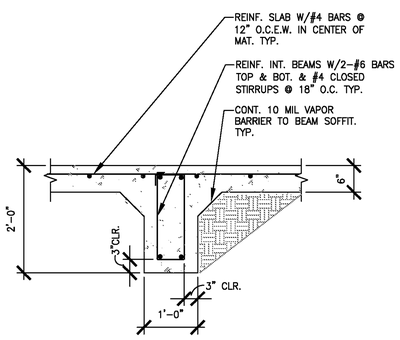

3 SSD.8.0 TYP. INTERIOR BEAM

SCALE : 3/4"=1'-0"

STATE OF TEXAS
JACK HARRISON
85472
LICENSED
PROFESSIONAL ENGINEER
1-16-19

Structural Design Consulting
100 Park Road South
Wimberley, Texas 78676
T.B.P.E. FIRM #4688
Office 830-935-2840

Jay Engineering Company, Inc.
P.O. Box 1220
Leander, Texas 78646-1220
Tel: (512) 259-3882 Fax: (512) 259-8016
Texas Registered Engineering Firm F-4780

WRP, OFFSITE LIFT STA. & RECLAIMED WATER PUMP STA.
CRYSTAL FALLS WEST - SEC. 1

LIFT STATION SLAB PLAN & DETAILS

THE LOOKOUT GROUP

SCALE: AS NOTED DWN: JWH DESIGN: JWH DATE: DEC 2012
DWG. NO. AS NOTED JOB NO. 12782012

no.	date	Revisions	copy:

Sheet
SSD.8.0

NOTES:

1. ALL FITTINGS SHALL BE RESTRAINED.
2. ALL ABOVE GROUND PIPING TO BE INSULATED.
2. RPZ INSALLATION PER MFR. RECOMMENDATIONS.
3. CONTRACTOR TO SUPPLY TEST REPORT FOR RPZ.
4. RECLAIMED WATER PUMP STATION DISCHARGE PIPING TO REMAIN DISCONNECTED FROM RECLAIMED WATER SYSTEM UNTIL RPZ/INTERCONNECT IS REMOVED.
5. CONTRACTOR MUST ORDER THE METER THROUGH THE CITY'S UTILITY BILLING DEPARTMENT.

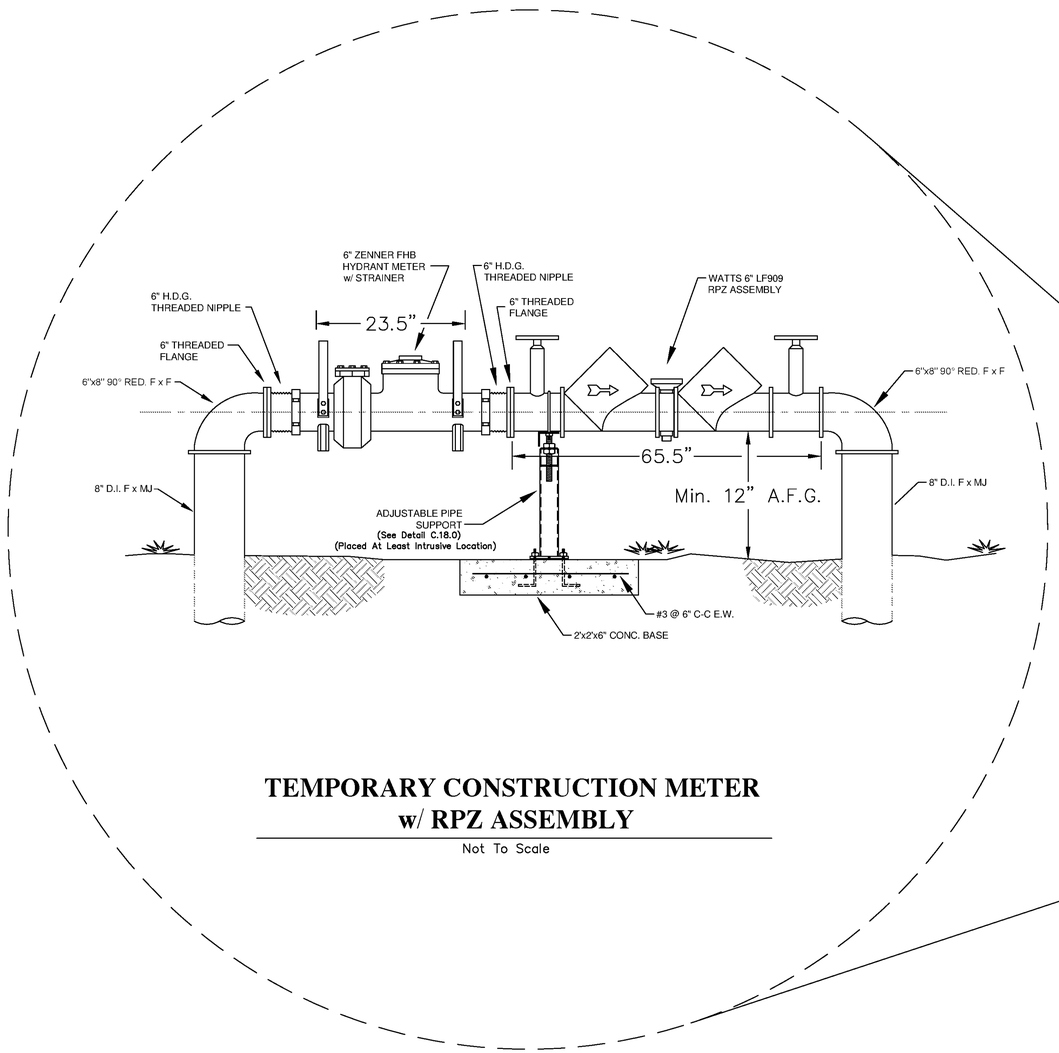

TEMPORARY CONSTRUCTION METER w/ RPZ ASSEMBLY

Not To Scale

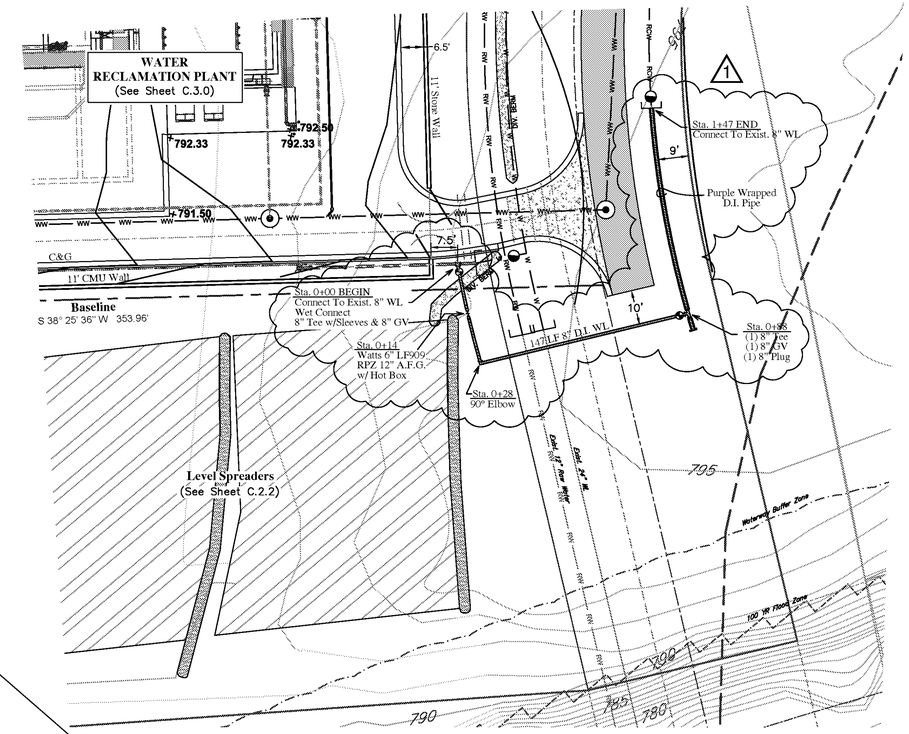

SCALE: 1" = 2' Vert
1" = 20' Horiz

INTERCONNECT WATERLINE

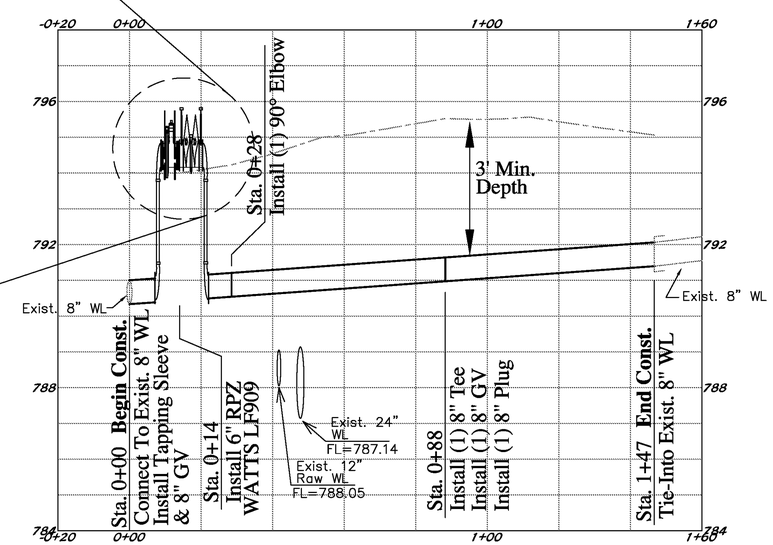

STATE OF TEXAS
FRANK T. PHELAN
93874
LICENSED PROFESSIONAL ENGINEER
3/6/15

Jay Engineering Company, Inc.
P.O. Box 1220
Lakeway, Texas 78646-1220
Tel: (512) 259-3882 Fax: (512) 259-8016
Texas Registered Engineering Firm F-4780

CITY OF CRYSTAL FALLS, WEST SEC. 1
WRP, OFFSITE LIFT STA. & RECLAIMED WATER PUMP STA.

INTERCONNECT WATERLINE

No.	date	revisions	appr.
1	01/15	Interconnect WL	FTP

THE LOOKOUT GROUP

SCALE: AS NOTED DWN: JJD DESIGN: FAJ DATE: JAN 2014
DWG. NO. AS NOTED JOB NO. 157-045-20

Sheet
C.1.1

C:\Projects-Lookout-Group\Crystal-Falls-West_Sec1_WRP_LiftSta_PropSta_044-045-046\Const-Plans_WRP\4th-Set\CFW-Sec1_WRP_Sh-C.1.1_Interconnect-WL.dwg

NOTES:

1. SEE SHEET E.5.0 FOR CABLE & CONDUIT SIZES.
2. ALL WORK TO BE PER NEC, LATEST EDITION.

LIGHTING FIXTURE SCHEDULE - SEE SHEET C.20.0 FOR DETAILS:

- E - 36 WATT LED, STANCHION MOUNT, SWITCHED
- F - 150 WATT HPS, POLE MOUNT, PHOTO CELL CONTROLLED
- G - DOUBLE 150 WATT HPS, POLE MOUNT, PHOTO CELL CONTROLLED
- H - 150 WATT HPS, POLE MOUNT, PHOTO CELL & MOTION SENSOR CONTROLLED

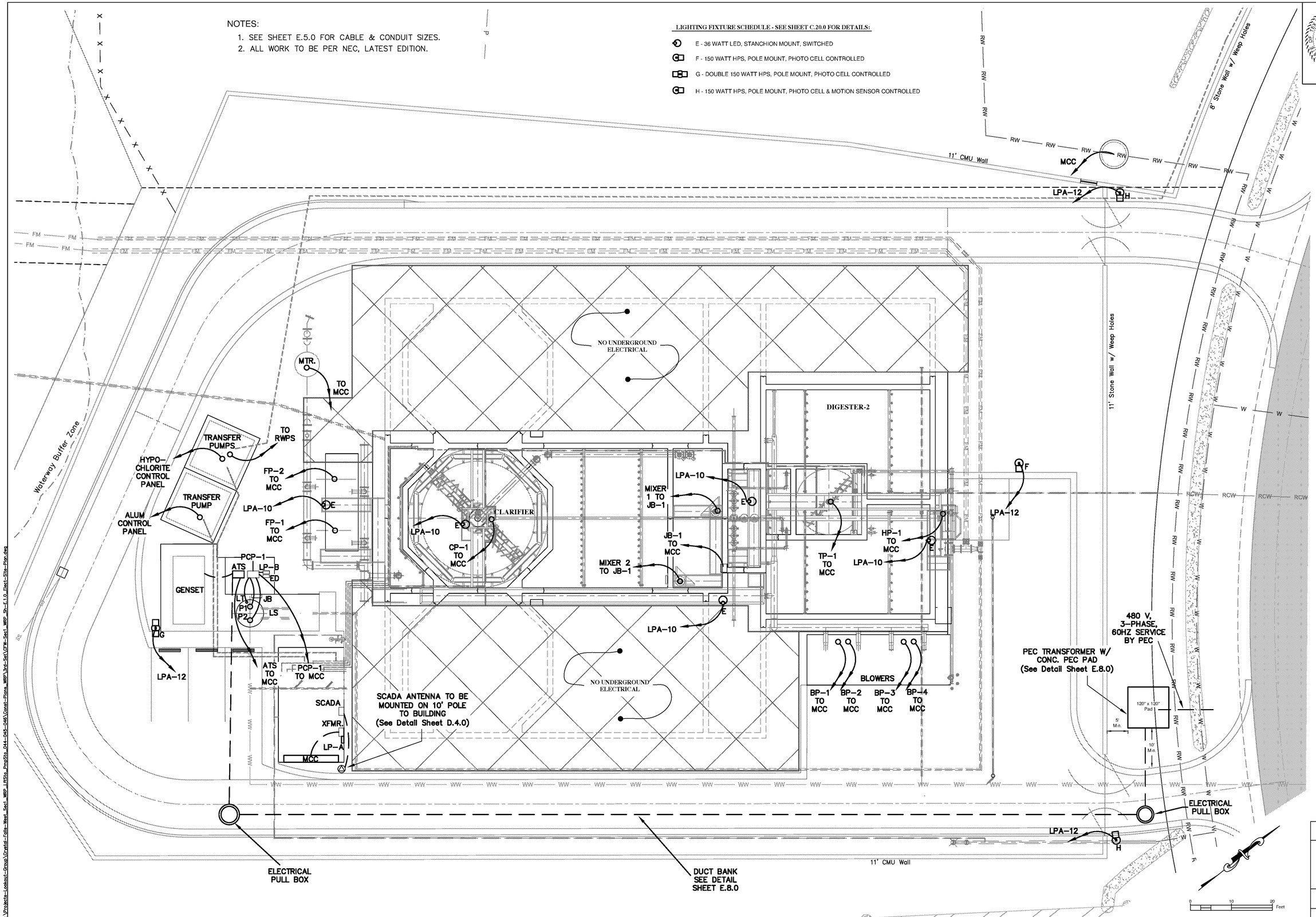

Jay Engineering Company, Inc.
P.O. Box 1220
Lakeway, Texas 78646-1220
Tel: (512) 259-3882 Fax: (512) 259-8016
Texas Registered Engineering Firm F-4780

CRYSTAL FALLS WEST - SEC. I
WRP, OFFSITE LIFT STA. & RECLAIMED WATER PUMP STA.

ELECTRICAL SITE PLAN

THE LOOKOUT GROUP

SCALE: AS NOTED | DWN: JJD | DESIGN: FAJ | DATE: APRIL 2013
DWG. NO. AS NOTED | JOB NO. 157-045-20

No.	date	Revisions	appv.

Sheet
E.1.0

C:\Projects-Lookout-Group\Crystal-Falls-West_Sec1_WRP_LIS\Ts_PropSts_044-045-046\Const-Plans_WRP\3rd-Set\CFW-Sec1_WRP-Sh-E1.0_Elect-Site-Plan.dwg

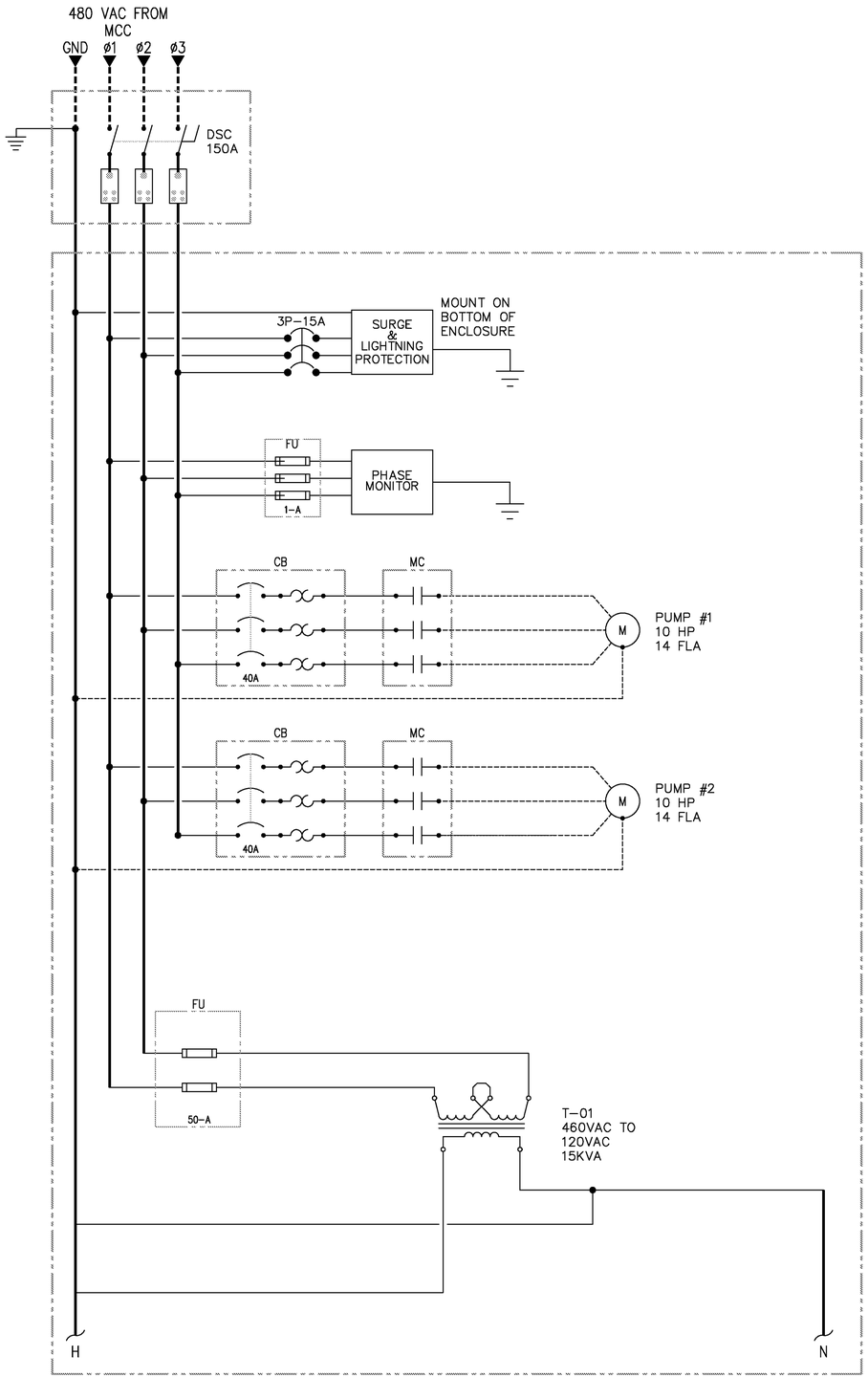

CIRCUIT BREAKER PANEL LP-B SCHEDULE 10K AIC							
VOLTS: 120		AMPS: 100		MCB: 80		PHASE/WIRING: 1ø	
CIRCUIT BREAKER SIZE	CKT. NO.	LOAD DESCRIPTION	PHASE A	PHASE B	LOAD DESCRIPTION	CKT. NO.	CIRCUIT BREAKER SIZE
15A	1	PUMP CONTROLS			GFCI RECEPTACLE	2	15A
15A	3	PANEL LIGHT			SPARE	4	15A
15A	5	SHELTER LIGHT			SPARE	6	20A
	7					8	
	9					10	
	11					12	
	13					14	

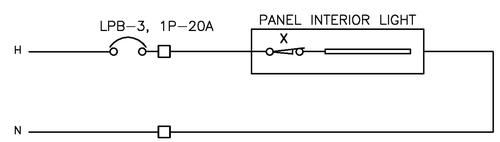

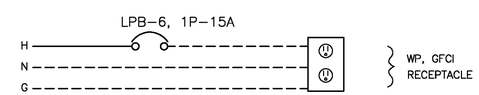

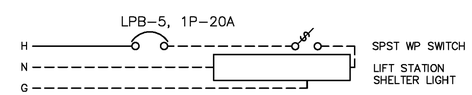

KEYNOTES:

1. OVERLOAD INTERNAL TO STARTER.
2. CURRENT SENSOR INTERNAL TO STARTER.
3. MINIMIZE LENGTH OF SURGE PROTECTOR LEADS AVOID BENDS. USE LOW IMPEDANCE WIRE. FOLLOW MANUFACTURER'S RECOMMENDATIONS.

NOTES:

1. SUBMIT ELECTRICAL 1–LINE DIAGRAM & PUMP CONTROL SCHEMATICS FOR ENGINEERING APPROVAL.
2. ALL WORK TO BE PER NEC, LATEST EDITION.

☐ – TB CONNECTION

SEE ONE–LINE DIAGRAM FOR WIRE SIZE.

SUBMIT ELECTRICAL POWER DIAGRAM FOR ENGINEERING APPROVAL

FRANK T. PHELAN
93874
9/16/13

Jay Engineering Company, Inc.
P.O. Box 1220
Leander, Texas 78646-1220
Tel.: (512) 259-3082 Fax.: (512) 259-8016
Texas Registered Engineering Firm F–4780

CRYSTAL FALLS WEST - SEC. 1
WRP, OFFSITE LIFT STA. & RECLAIMED WATER PUMP STA.

LIFT STATION #17
ELECTRICAL POWER DIAGRAM

THE LOOKOUT GROUP

SCALE: AS NOTED | DWN: JJD | DESIGN: FAJ | DATE: APRIL 2013
DWG. NO. AS NOTED | JOB NO. 157-045-20

no.	date	Revisions	appv.

Sheet
E.2.0

C:\Projects-Lookout-Group\Crystal-Falls-West_Sec1_WRP_LiftSta_PmpSta_044-045-046\Const-Plans_WRP\3rd-Set\CFW-Sec1_WRP_Sh-E.2.0_LS-Elect-Power-Diagram.dwg

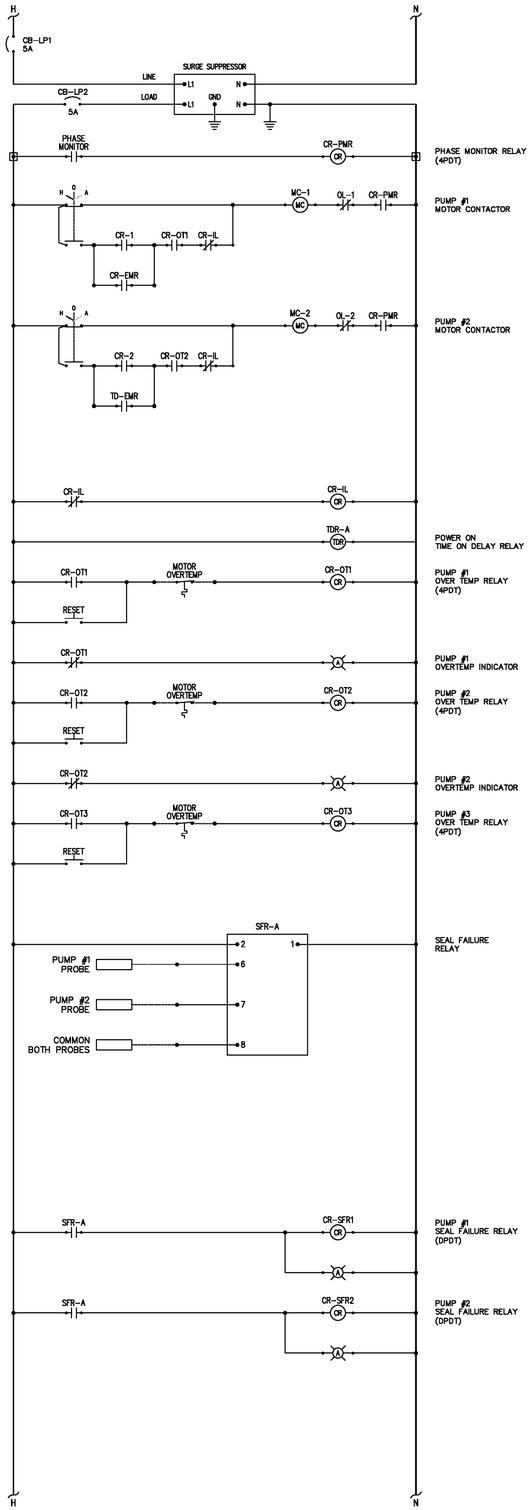

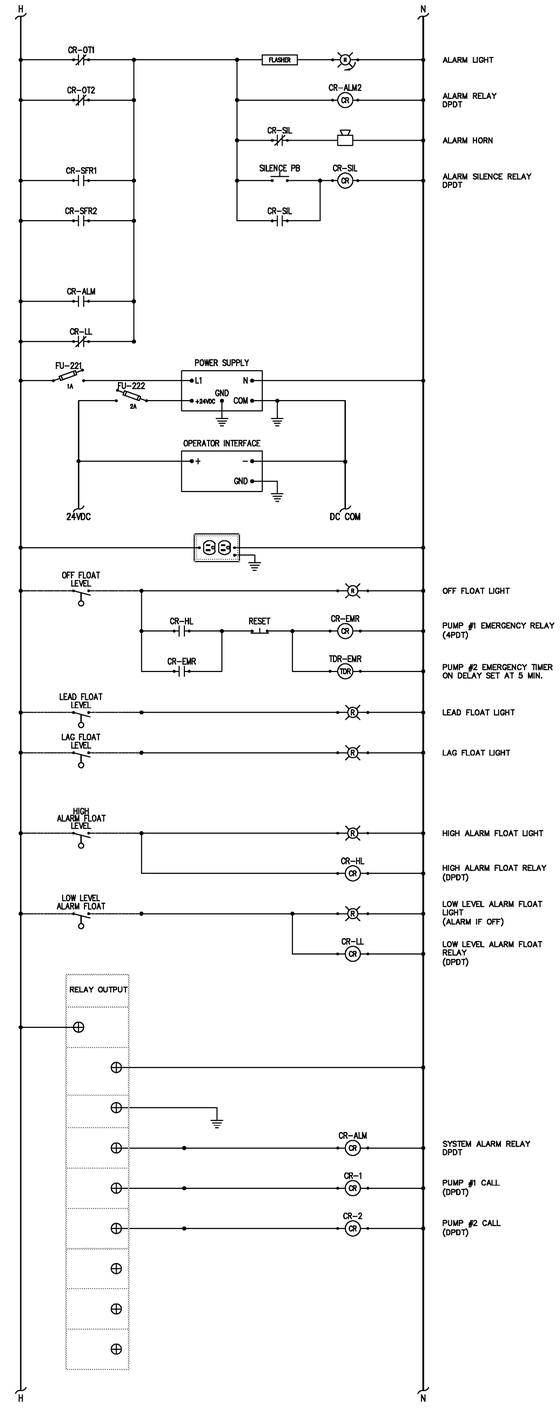

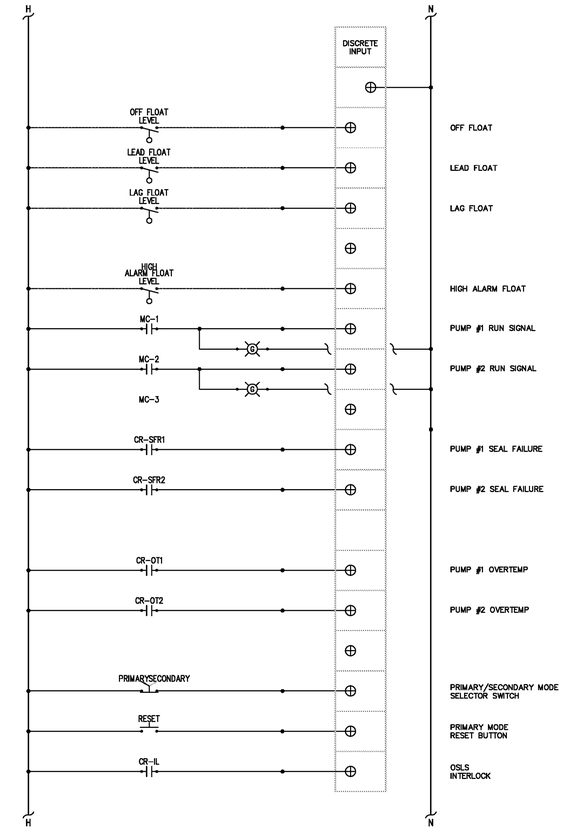

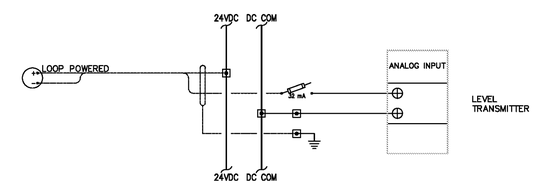

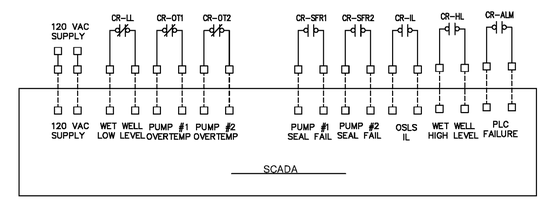

CITY OF LEANDER SCADA SYSTEM

GENERAL NOTES:

1. PRIMARY PUMP CONTROL TO BE VIA LEVEL SENSOR INPUT THROUGH PLC.
2. IN CASE OF A LEVEL SENSOR INPUT FAILURE, PLC TO AUTOMATICALLY SWITCH TO FLOAT INPUT FOR PUMP OPERATION.
3. IN THE EVENT OF A PLC FAILURE, PUMPS TO SWITCH TO AUTOMATIC TIMER OPERATION.
4. DUCT SEAL CABLE ENTRANCES FROM WET WELL INTO J-BOX AND PUMP CONTROL PANEL.
5. ALL WORK TO BE PER NEC, LATEST EDITION.
6. SUBMIT ELECTRICAL ONE-LINE DIAGRAMS AND PUMP CONTROL SCHEMATICS FOR ENGINEERING APPROVAL.

FRANK T. PHELAN
93874
LICENSED PROFESSIONAL ENGINEER
4/16/13

Jay Engineering Company, Inc.
P.O. Box 1220
Leander, Texas 78646-1220
Tel.: (512) 259-3082 Fax.: (512) 259-9016
Texas Registered Engineering Firm F-4780

CRYSTAL FALLS WEST - SEC. 1
WRP, OFFSITE LIFT STA. & RECLAIMED WATER PUMP STA.

LIFT STATION #17 ELECTRICAL SCHEMATIC & PUMP CONTROL SCHEMATIC

THE LOOKOUT GROUP

SCALE: AS NOTED | DWN: JJD | DESIGN: FAJ | DATE: APRIL 2013
DWG. NO. AS NOTED | JOB NO. 157-045-20

no.	date	Revisions	appv.

Sheet
E.3.0

c:\Projects-Lookout-Group\Crystal-Falls-West_Sec1_WRP_LiftSta_PmpSta_044-045-046\Const-Plans_WRP\3rd-Set\CFW-Sec1_WRP_Sh-E.3.0_LS-Elect-Schmtc-Pump-Cntrl.dwg

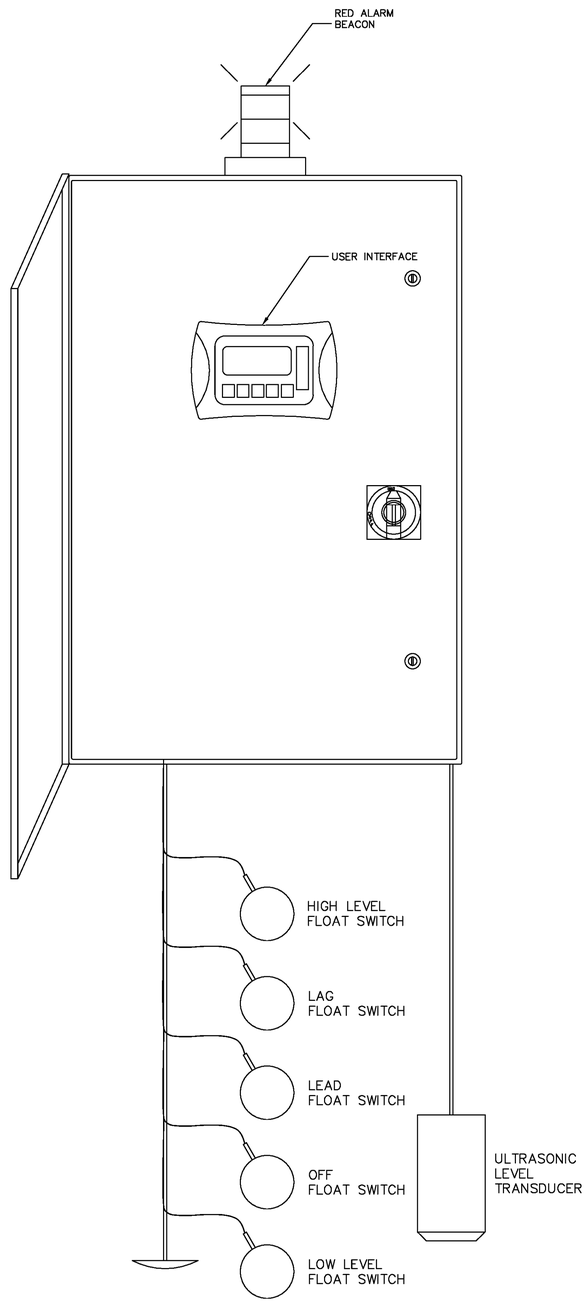

TYP. PCP PANEL LAYOUT

N.T.S.

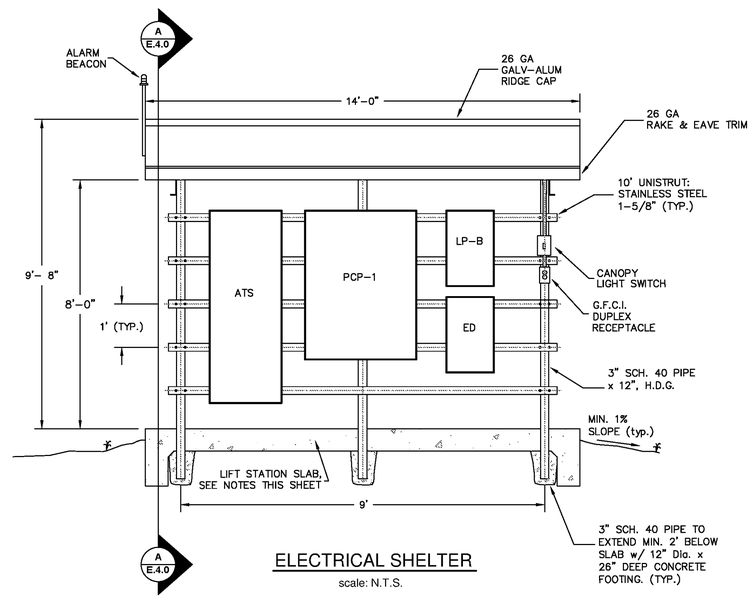

ELECTRICAL SHELTER

scale: N.T.S.

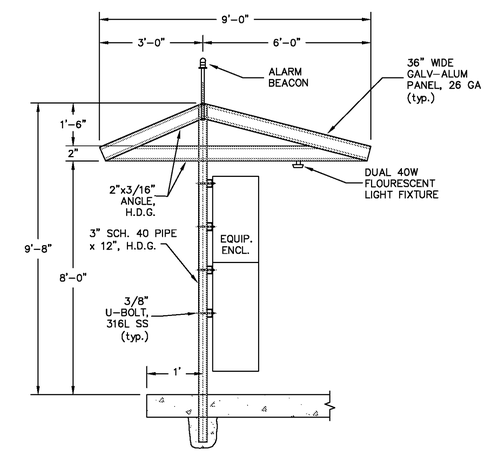

SHELTER SECTION A E.4.0

scale: N.T.S.

NOTES:
1. ALL ENCLOSURES TO BE NEMA 3R.
2. SLAB TO BE 8"x12'x9' WITH #4 BARS @ 12" C-C E.W.
3. SLAB EXTERIOR BEAMS TO BE 1' WIDE x 1'-4" TO BOTTOM OF SLAB WITH (2) #6 TOP & BOTTOM AND #4 CLOSED STIRRUPS AT 18" O.C.
4. ALARM BEACON MOUNTING HEIGHT AS NECESSARY FOR VISIBILTY FROM ROAD.

FRANK T. PHELAN 93974 9/16/13

Jay Engineering Company, Inc.
P.O. Box 1220
Leander, Texas 78646-1220
Tel.: (512) 259-3882 Fax.: (512) 259-8016
Texas Registered Engineering Firm F-4780

CRYSTAL FALLS WEST - SEC. 1
WRP, OFFSITE LIFT STA. & RECLAIMED WATER PUMP STA.

LIFT STATION #17 PUMP CONTROL PANEL, SHELTER & DETAILS

THE LOOKOUT GROUP

SCALE: AS NOTED DWN: JJD DESIGN: FAJ DATE: APRIL 2013
DWG. NO. AS NOTED JOB NO. 157-045-20

no.	date	Revisions	appv.

Sheet E.4.0

C:\Projects-Lookout-Group\Crystal-Falls-West_Sec1_WRP_LiftSta_PmpSta_044-045-046\Const-Plans_WRP\3rd-Set\CFW-Sec1_WRP_Sh-E.4.0_LS-Pump-Ctrl-Stn-Data.dwg

ELECTRICAL LOAD CHART @ 480 V, 3ø, 3W SERVICE				
LOAD DESCRIPTION		CUMULATIVE LOAD CURRENT (AMPERES)		
		PHASE I	PHASE II	FINAL
MOTORS – FLA		249	462	673
25% LARGEST MOTOR		39	39	39
OTHERS		54	54	54
TOTAL:	AMPS	342	556	766
	KVA	284	462	637
SERVICE CONDUCTORS: 2–3" CONDUITS EACH WITH 3–400MCM(P), #2/0 (G)				

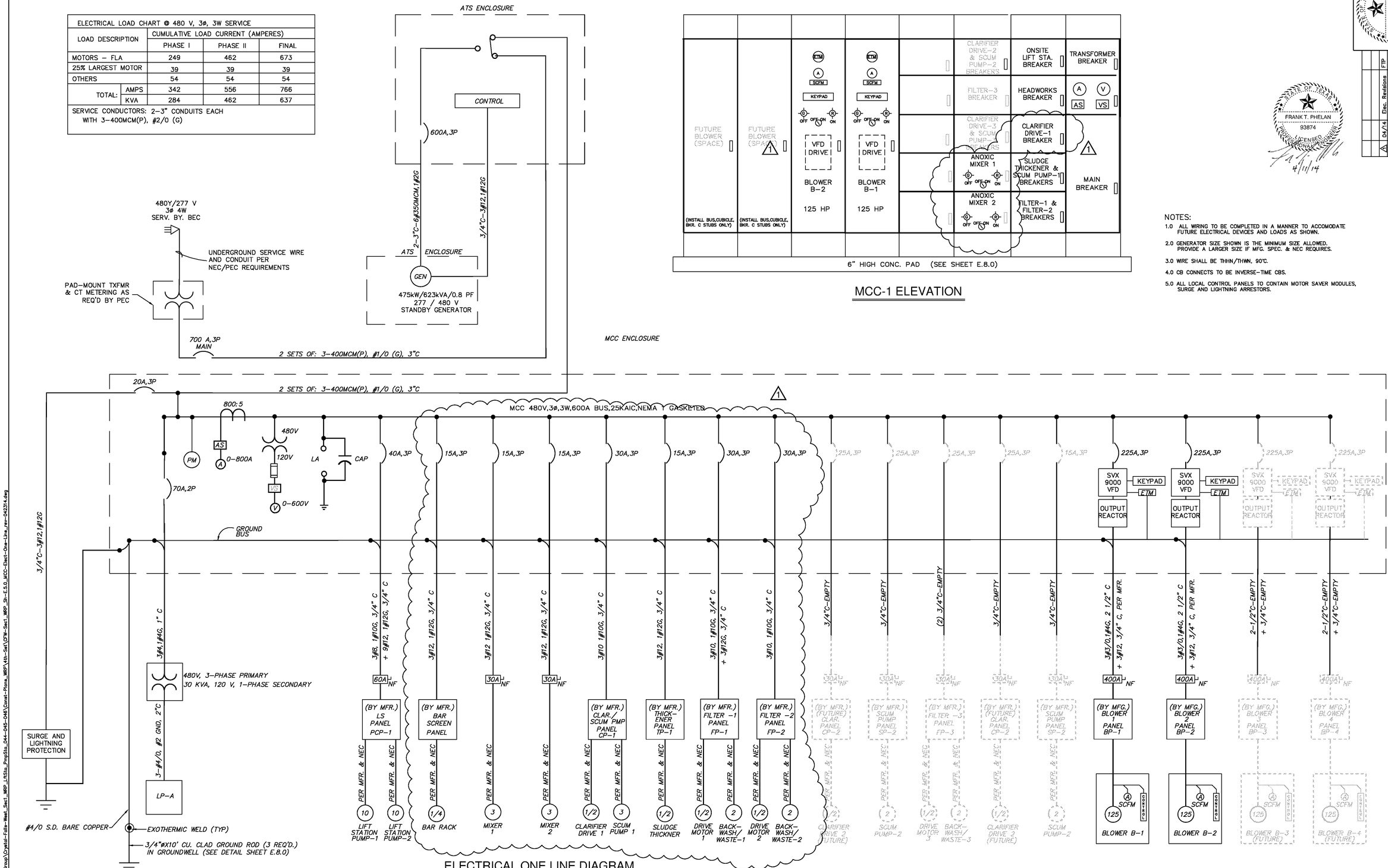

ELECTRICAL ONE LINE DIAGRAM

MCC-1 ELEVATION

NOTES:

1.0 ALL WIRING TO BE COMPLETED IN A MANNER TO ACCOMODATE FUTURE ELECTRICAL DEVICES AND LOADS AS SHOWN.

2.0 GENERATOR SIZE SHOWN IS THE MINIMUM SIZE ALLOWED. PROVIDE A LARGER SIZE IF MFG. SPEC. & NEC REQUIRES.

3.0 WIRE SHALL BE THHN/THWN, 90°C.

4.0 CB CONNECTS TO BE INVERSE–TIME CBS.

5.0 ALL LOCAL CONTROL PANELS TO CONTAIN MOTOR SAVER MODULES, SURGE AND LIGHTNING ARRESTORS.

STATE OF TEXAS
FRANK T. PHELAN
93874
LICENSED PROFESSIONAL ENGINEER
4/11/14

No.	date	Elec. Revisions	FTP
1	04/14	Revisions	copy.

Jay Engineering Company, Inc.
P.O. Box 1220
Leander, Texas 78646-1220
Tel: (512) 259-9086 Fax: (512) 259-9016
Texas Registered Engineering Firm F-4780

CRYSTAL FALLS WEST - SEC. 1
WRP, OFFSITE LIFT STA. & RECLAIMED WATER PUMP STA.

MCC ELECTRICAL ONE-LINE DIAGRAM

THE LOOKOUT GROUP

SCALE: AS NOTED | DWN: JJD | DESIGN: FAJ | DATE: APRIL 2014
DWG. NO. | JOB NO. 157-045-20

Sheet
E.5.0

C:\Projects-Lookout-Group\Crystal-Falls-West_Sec1_WRP_LftSta_PmpSta_044-045-046\Const-Plans_WRP\4th-Set\CFW-Sec1_WRP_Sh-E.5.0_MCC-Elect-One-Line_rev-042314.dwg

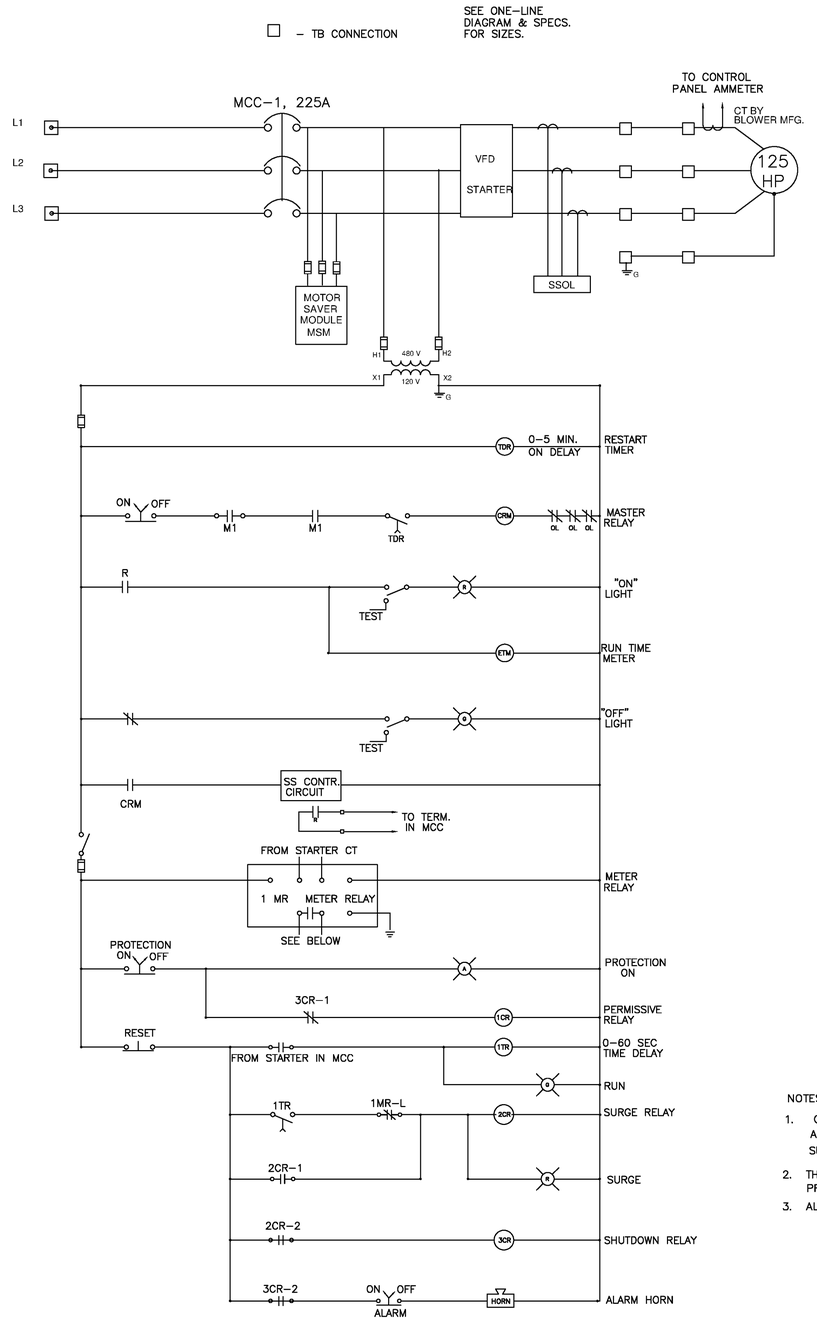

TYPICAL 125 HP BLOWER SCHEMATIC

NOTES:

1. CONTRACTOR TO VERIFY WIRING CONDITIONS AND FURNISH AND INSTALL ALL NECESSARY EQUIPMENT AND MATERIALS TO PROVIDE A COMPLETE WORKING SYSTEM. SUBMIT WIRING SCHEMATIC FOR APPVL.
2. THE SCHEMATICS SHOWN HEREON ARE INTENDED TO DEFINE THE CHARACTER AND SCOPE OF THE WORK. SUBMIT PROPOSED DEVICES AND WIRING DIAGRAMS FOR APPROVAL PRIOR TO WORK PERFORMANCE.
3. ALL WORK TO BE PERFORMED IN ACORDANCE WITH NEC LATEST EDITION AND TO THE DESIGN INTENT PER ENGINEER.

FRANK T. PHELAN
93874
PROFESSIONAL ENGINEER
9/16/13

Jay Engineering Company, Inc.
P.O. Box 1220
Leander, Texas 78646-1220
Tel.: (512) 259-9088 Fax.: (512) 259-8016
Texas Registered Engineering Firm F-4780

WRP, OFFSITE LIFT STA. & RECLAIMED WATER PUMP STA.
CRYSTAL FALLS WEST - SEC. 1

MCC ELECTRICAL CONTROL SCHEMATICS

THE LOOKOUT GROUP

SCALE: AS NOTED DWN: JJO DESIGN: FAJ DATE: APRIL 2013
DWG. NO. AS NOTED JOB NO. 157-045-20

no.	date	Revisions	appv.

Sheet
E.6.0

C:\Projects-Lookout-Group\Crystal-Falls-West_Sec1_WRP_LiftSta_PmpSta_044-045-046\Const-Plans_WRP\3rd-Set\CFW-Sec1_WRP_Sh-E.6.0_MCC-Elect-Ctrl-Schmtcs.dwg

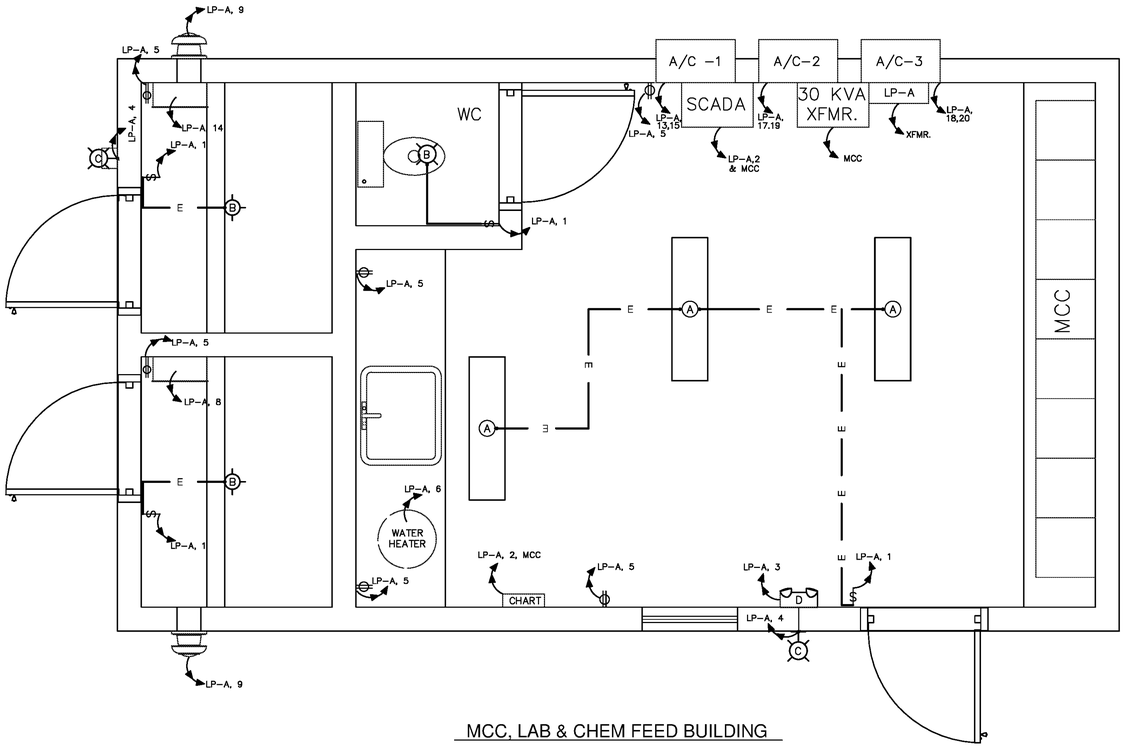

MCC, LAB & CHEM FEED BUILDING

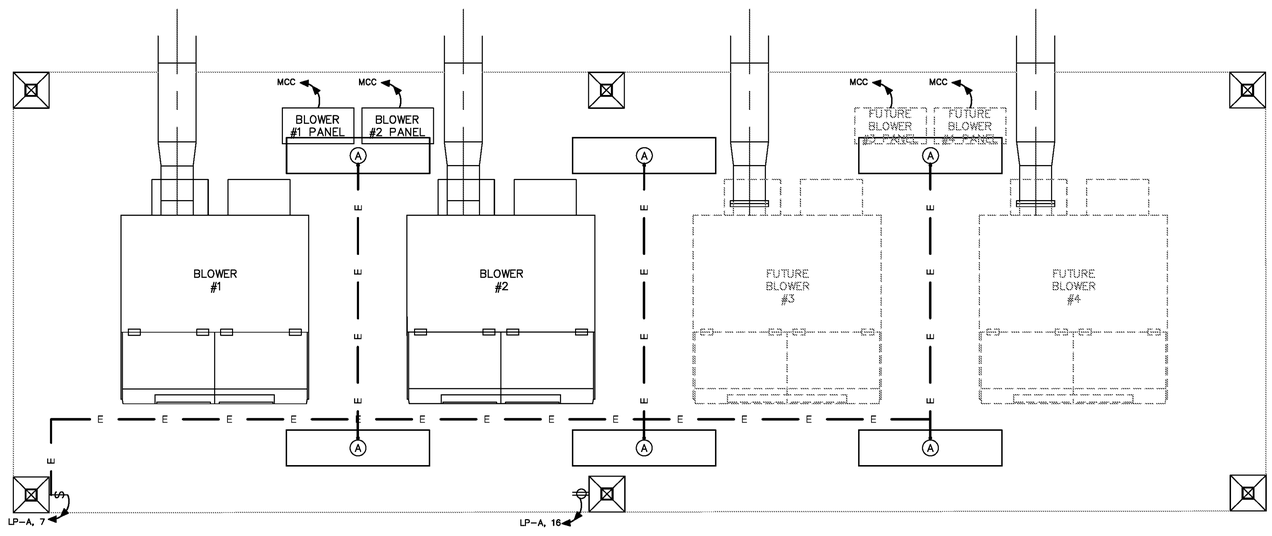

BLOWER SHELTER

PLAN VIEW

SCALE: 3/8"=1'-0"

CIRCUIT BREAKER PANEL LP-A SCHEDULE 10^{K}AIC

VOLTS: 120/240 AMPS: 200 MCB: 200 PHASE/WIRING: 1ø

CIRCUIT BREAKER SIZE	CKT. NO.	LOAD DESCRIPTION			LOAD DESCRIPTION	CKT. NO.	CIRCUIT BREAKER SIZE
15A	1	MCC/LAB BLDG. LIGHTS			CHART RECORDER/SCADA	2	15A
15A	3	EMERGENCY BUILDING LIGHTS			EXTERIOR BUILDING LIGHTS	4	15A
15A	5	MCC/LAB BUILDING GFCI DUPLEX RECEPTICLES			WATER HEATER	6	30A
15A	7	BLOWER SHELTER LIGHTS			HYPOCHLORITE FEED	8	15A
15A	9	CHEMICAL FEED ROOM FANS			STANTION MOUNT EXT. PLANT LIGHTS "F"	10	20A
15A	11	WAS TIMERS			POLE-MT EXT. LIGHTS "E"	12	20A
15A	13	AC -1			ALUM FEED	14	15A
15A	15	AC-1			BLOWER SHELTER GFCI DUPLEX RECEPTICLE	16	15A
15A	17	AC-2			AC-3	18	15A
15A	19	AC-2			AC-3	20	15A

LIGHTING SCHEDULE

(A) 120 V, 2–TUBE FLOURESCENT FIXTURE w/2–F40 DX/RS TUBES w/ALL WEATHER SLEEVES. USE ELECTRONIC F32T8 0'START BALLAST, IN DUST/WEATHERPROOF FIXTURE (CEILING MOUNT, NON–APPERATURED).

(B) 120V, 300W RATED, INCANDENSCENT CEILING MOUNTED EXPLOSION PROOF FIXTURE W/ LENS GUARD AND 100W LAMP, APPLETON MODEL #AC1575 OR EQUAL.

(C) 120 V, 70 W, HPS WALL MOUNT, WEATHERPROFF, HUBBELL NRG–31X (MODEL NO: NRG317) w/PHOTOCELL OR EQUAL.

(D) 120 V, 12 W INCANDESCENT BATTERY BACKUP EMERGENCY LIGHTS w/ CHARGER. LITHONIA ELT36, OR APPROVED EQUAL.

NOTE: SEE ELECTRICAL SITE PLAN (SH. E.1.0) FOR AREA AND STANCHION LIGHTS.

NOTES:

1. CONTRACTOR TO VERIFY WIRING CONDITIONS AND FURNISH AND INSTALL ALL NECESSARY EQUIPMENT AND MATERIALS TO PROVIDE A COMPLETE WORKING SYSTEM. SUBMIT WIRING SCHEMATIC FOR APPVL.
2. THE SCHEMATICS SHOWN HEREON ARE INTENDED TO DEFINE THE CHARACTER AND SCOPE OF THE WORK. SUBMIT PROPOSED DEVICES AND WIRING DIAGRAMS FOR APPROVAL PRIOR TO WORK PERFORMANCE.
3. ALL WORK TO BE PERFORMED IN ACORDANCE WITH NEC LATEST EDITION AND TO THE DESIGN INTENT PER ENGINEER.
4. ALL CONDUIT SHALL BE ¾" MIN. ALL WIRES SHALL BE #12 MIN. UNLESS OTHERWISE NOTED.
5. EACH CONTROL CIRCUIT RUN SHALL HAVE SPARE PAIR OF CONTROL WIRES.
6. ALL RECEPTACLES TO BE G.F.C.I.
7. CONTRACTOR TO INCLUDE COMMUNICATION CABLE AND CONDUIT FROM SCADA PANEL TO OWNER DEFINED LOCATION IN MCC/LAB BUILDING AND ANTENNA WIRE AND CONDUIT TO TOWER MOUNTED ANTENNA.
8. SEE ONE–LINE DIAGRAM ON SHEET E.5.0 FOR CONDUIT AND CABLE SCHEDULES.

Jay Engineering Company, Inc.
P.O. Box 1220
Leander, Texas 78646-1220
Tel: (512) 259-3836 Fax: (512) 259-8016
Texas Registered Engineering Firm F–4780

CRYSTAL FALLS WEST - SEC. 1
WRP, OFFSITE LIFT STA. & RECLAIMED WATER PUMP STA.

ELECTRICAL POWER & LIGHTING CIRCUITS

THE LOOKOUT GROUP

SCALE: AS NOTED DWN: JJD DESIGN: FAJ DATE: APRIL 2013
DWG. NO. AS NOTED JOB NO. 157-045-20

no.	date	Revisions	appv.

Sheet
E.7.0

C:\Projects-Lookout-Group\Crystal-Falls-West_Sec1_WRP_LiftSta_PmpSta_044-045-046\Const-Plans_WRP\3rd-Set\CFW-Sec1_WRP_Sh-E.7.0_Elect-Pwr-Lighting-Circts.dwg

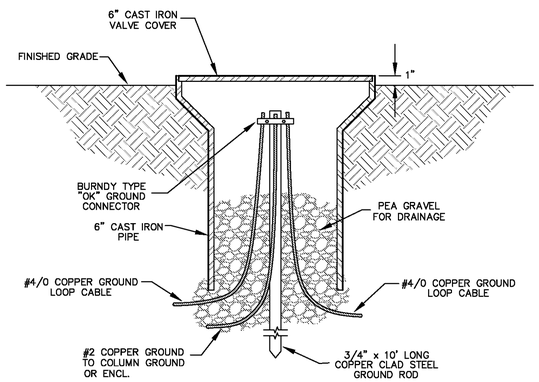

GROUNDWELL DETAIL

N.T.S.

NOTE:

PROVIDE GROUND WELL FOR EACH GROUND ROD SHOWN ON THE DRAWINGS.

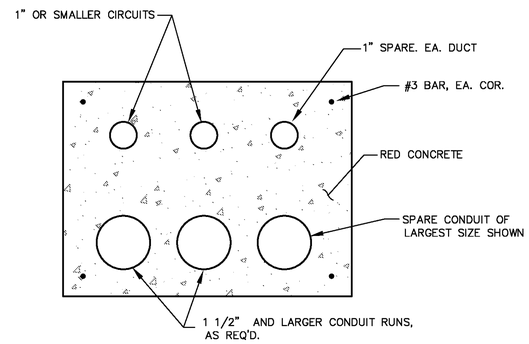

DUCT BANK DETAIL

N.T.S.

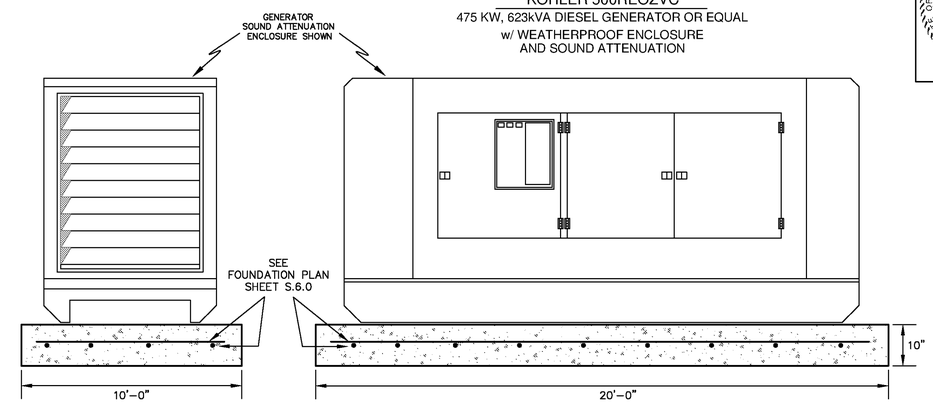

END VIEW

SIDE VIEW

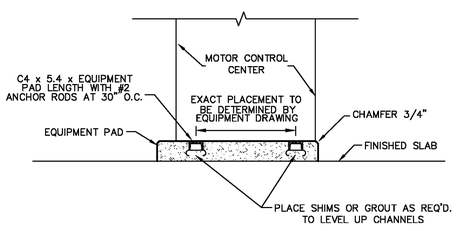

NOTES:

1. FRONT OF PAD IS TO EXTEND 3" BEYOND LARGEST UNIT OF EQUIPMENT.
2. SIDES OF PADS TO EXTEND 3" BEYOND EACH END.

SECTION - TYPICAL MCC FOUNDATION (A / E.8.0)

scale: N.T.S.

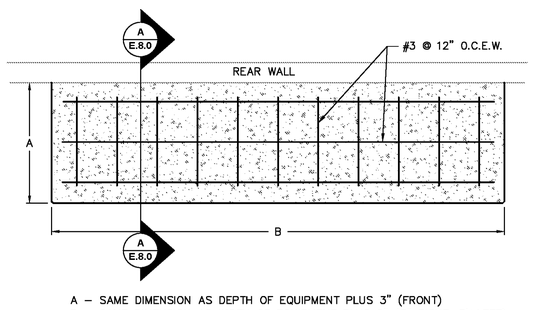

A – SAME DIMENSION AS DEPTH OF EQUIPMENT PLUS 3" (FRONT)
B – SAME DIMENSION AS WIDTH OF EQUIPMENT PLUS 6" (3" RIGHT, 3" LEFT)

Typical All Pads

1) Require 3" conduit (unless otherwise specified by PEC) with bell end fittings to extend 1½" to 2" above pad.
2) Pads must extend a minimum of 4" above final grade and 1½" below final grade. All pads must be placed on a slope less than or equal to 3:1. If greater than 3:1 contractor must bring slope to required grade.
3) All disturbed soil underneath pad must be replaced by concrete.
4) All ground rods shall be ¾" X 10' Copper clad with clamp and must extend 3" above top of pad.
5) Wood float finish leaving pad square and level with no dips or crown.

Typical For Single Phase Transformer, Combination, Sectionalizer, and Secondary Pads

6) Concrete to have minimum strength of 3000 PSI.
7) Steel reinforcing shall be 6" X 6" No. 10 wire mesh or ⅛" rebar on 12" center to stop 1" from the sides.

Typical For 3 Phase Transformer Pads

8) Concrete testing, 4000 PSI; 4%-6% entrained air, ¾" maximum size aggregate.
9) Steel reinforcement shall be ⅜" rebar on 12" center to stop 1" from sides.
10) Minimum concrete cover over reinforcing steel 2" unless noted.
11) Consult with PEC before pouring concrete.

Typical Trench Details

12) Schedule 40 electrical grade PVC conduit. Schedule 80 electrical grade conduit can be used in place of sand in secondary only trenches.
13) Initial backfill shall be manufactured or commercial sand. Minimum ⅜" pea gravel may be used for initial backfill in flood prone areas.
14) With PEC approval minimum cover requirements may be reduced by six inches with every two inches of 3000 PSI concrete poured directly onto conduit. ***CONTACT PEC BEFORE POURING CONCRETE***
15) If any type of vault or pedestal for the underground electric is planned then all other utilities should be routed around these facilities.
16) For 2" and larger waterlines special permission must be granted by PEC.

Legend
Typical in all Drawings

P	Primary Conduit	CW	Communications or water
S	Secondary Conduit	G	Gas Line
AS	Alternate Secondary Conduit		

PEDERNALES ELECTRIC COOPERATIVE, INC.
URD DEVELOPER'S SPECIFICATIONS

Typical Notes Reference Page

drawn:	approved:	date:	drawing number:
JBS	MJB	December 2, 2011	510-009-0911

Reference Drawing
510-009-0911
for all notes

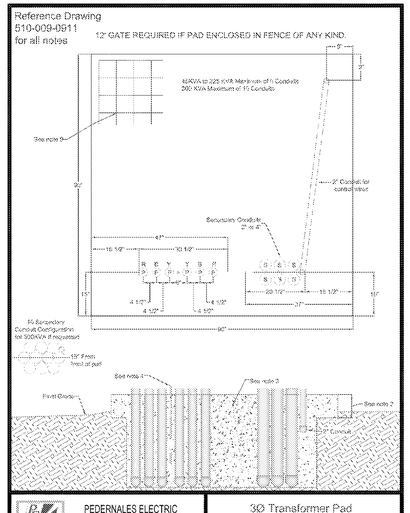

PEDERNALES ELECTRIC COOPERATIVE, INC.
URD DEVELOPER'S SPECIFICATIONS

3Ø Transformer Pad 45-300 KVA

drawn:	approved:	date:	drawing number:
JBS	MJB	December 14, 2011	530-030-0911

Reference Drawing
510-009-0911
for all notes

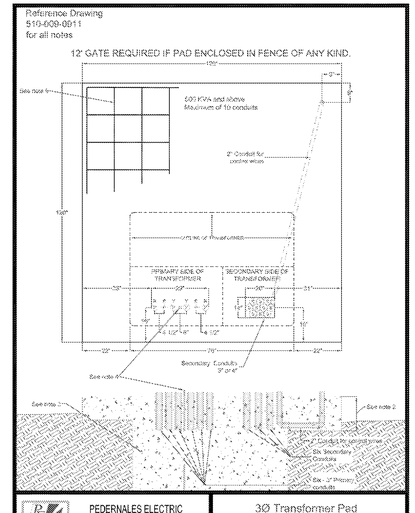

PEDERNALES ELECTRIC COOPERATIVE, INC.
URD DEVELOPER'S SPECIFICATIONS

3Ø Transformer Pad 500-1500 KVA

drawn:	approved:	date:	drawing number:
JBS	MJB	December 2, 2011	530-032-0911

THREE PHASE TRANSFORMER PADS
500 - 1500 kVA (WRP & PS)
45 - 300 kVA (OSLS #16)

NTS

Notes:
1. ALL FABRICATED METAL HOT DIPPED GALVANIZED (H.D.G.) UNLESS NOTED OTHERWISE.
2. ALL SELF–TAPPING SCREWS H.D.G.
3. ALL MISC. HARDWARE 316L STAINLESS STEEL (SS) UNLESS NOTED OTHERWISE.
4. SEAL WELD ALL JOINTS 3/16" CONTINUOUS FILLET UNLESS NOTED OTHERWISE.

Jay Engineering Company, Inc.
P.O. Box 1220
Leander, Texas 78646-1220
Tel.: (512) 259-3080 Fax.: (512) 259-8016
Texas Registered Engineering Firm F–4780

CRYSTAL FALLS WEST – SEC. 1
WRP, OFFSITE LIFT STA. & RECLAIMED WATER PUMP STA.

ELECTRICAL & EMERGENCY GENERATOR DETAILS

THE LOOKOUT GROUP

SCALE: AS NOTED DWN: JJD DESIGN: FAJ DATE: APRIL 2013
DWG. NO. AS NOTED JOB NO. 157–045–20

no.	date	Revisions	appr.

Sheet
E.8.0

C:\Projects–Lookout–Group\Crystal–Falls–West_Sec1_WRP_LiftSta_PmpSta_044–045–046\Const–Plans_WRP\3rd–Set\CFW–Sec1_WRP_Sh–E.8.0_Emergcy–Gen–Dets.dwg

CONDUIT RUN UNDERGROUND OR IN FLOOR SLAB

EXPOSED CONDUIT

1"C,3#10, 1#10G

CONDUIT & WIRE DESIGNATION E.G., 3 # 10 POWER
1 # 10 (G) IN 3/4" CONDUIT
(P) = POWER (C) = CONTROL
(G) = GROUND (A) = ALARM
(SH) = SPACE HEATER (I) = INSTRUMENTATION
(SP) = SPARE WIRES (EC) = EMPTY CONDUIT

HOMERUN TO PANEL CIRCUIT, MEMBERS INDICATED, SHORT HASH MARKS INDICATE PHASE WIRES, LONG HASH MARK INDICATES NEUTRAL WIRE, / MARK INDICATES EQUIPMENT GROUND WIRE. WHEN NOT MARKED, USE MINIMUM SIZE WIRE, CONDUIT.

GROUND WIRE. BARE COPPER UNDERGROUND

CONDUIT TURNING DOWN

CONDUIT TURNING UP

1 KEYNOTE SYMBOL AND KEYNOTE NUMBER

A WALL OR BRACKET MOUNTED LIGHT FIXTURE. LETTER DENOTES TYPE

A FLUORESCENT LIGHT FIXTURE. LETTER DENOTES TYPE

ABBREVIATIONS

AFF – ABOVE FINISHED FLOOR
EGC – ELECTRICAL GROUND CONDUCTOR
LA – LIGHTNING ARRESTOR
CAP – CAPACITOR
GFI – GROUND FAULT INTERRUPTER
WP – WEATHERPROOF
XFMR – TRANSFORMER
SW – SWITCH
TYP – TYPICAL
MH – MANHOLE
HH – HANDHOLE
GALV – GALVANIZED
S.D. BARE CU. – SOFT DRAWN BARE COPPER CABLE
ENCL – ENCLOSURE
REQ'D – REQUIRED
XFR SW – TRANSFER SWITCH
GEN – GENERATOR
EMER – EMERGENCY
XMTTR – TRANSMITTER
INST – INSTRUMENT
RTU – REMOTE TERMINAL UNIT
MTU – MASTER (BASE) TERMINAL UNIT

DIAGRAM SYMBOLS

FUSED SWITCH

CIRCUIT BREAKER

SIZE 1
FVNR
COMBINATION MOTOR STARTER
MOTOR STARTER: FVNR=FULL VOLTAGE NON–REVERSING
SSRV=SOLID STATE REDUCED VOLTAGE
RVNR=REDUCED VOLTAGE NON–REVERSING
FVR=FULL VOLTAGE REVERSING
MCP=MOTOR CIRCUIT PROTECTOR
SIZE=NEMA STARTER SIZE

480V
15KVA
120/240V
POWER TRANSFORMER. VOLTAGE AND KVA AS SHOWN

POTENTIAL TRANSFORMER

CURRENT TRANSFORMER

10 MOTOR. HP INDICATED

ETM ELAPSED TIME METER

A AMMETER

GROUND

GROUND ROD

NORMALLY OPEN SWITCH

V VOLTMETER

AS AMMETER SWITCH

VS VOLTMETER PHASE SELECTOR SWITCH

PMR POWER MONITOR RELAY

POWER RECEPTACLE–PIN & SLEEVE TYPE

H O A HAND–OFF–AUTOMATIC SWITCH

100 A
50 A
FUSE DISCONNECT SWITCH
–100 A SWITCH, 50 A FUSE

USER TELEPHONE JACK, TYPE RJ–11

MCP MOTOR CIRCUIT PROTECTOR

T THERMOSTAT

MM MOTOR METERING UNIT

DUPLEX OUTLET

M SERVICE METER

PRESSURE SWITCH NORMALLY OPEN CLOSES ON INCREASING PRESSURE

LIMIT SWITCH NORMALLY OPEN

MOTOR OPERATED VALVE GEARED LIMIT SWITCH

CIRCUIT BREAKER

NORMALLY OPEN RELAY CONTACT

NORMALLY CLOSED RELAY CONTACT

R PILOT LIGHT, COLOR INDICATED

TEST MOMENTARY CONTACT PUSHBUTTON, NORMALLY CLOSED

FUSE

TERMINAL BLOCK LOCATED IN MOTOR CONTROL CENTER

LEVEL SWITCH, NORMALLY OPEN

MOV MOTOR OPERATED VALVE

H O A
X00
0X0
00X
HAND–OFF–AUTOMATIC SWITCH

ALSO, HAND OFF AUTO
THREE POSITION MAINTAINED CONTACT SWITCH

ELECTRODE

TS TEMPERATURE SWITCH

FLASHER

SNI SYSTEM NETWORK INTERFACE
–CUSTOMER TELEPHONE J–BOX
BY SOUTHWESTERN BELL TELEPHONE CO.

SWITCH SPST, 20A, 125V

BEACON/HORN ACK.

CRL1 CONTROL RELAY, TAG ID "CRL1"

DUPLEX RECEPTACLE

UPS UNITERUPTIBLE POWER SUPPLY

MCP MOTOR CIRCUIT PROTECTOR

M SOLID–STATE MOTOR STARTER CONTACTOR

OVERLOAD

GROUND GRID

FRANK T. PHELAN
93874
LICENSED
PROFESSIONAL ENGINEER
9/16/13

Jay Engineering Company, Inc.
P.O. Box 1220
Leander, Texas 78646-1220
Tel.: (512) 259-3080 Fax.: (512) 259-8016
Texas Registered Engineering Firm F-4780

CRYSTAL FALLS WEST - SEC. 1
WRP, OFFSITE LIFT STA. & RECLAIMED WATER PUMP STA.

ELECTRICAL LEGEND AND KEY SHEET

THE LOOKOUT GROUP

SCALE: AS NOTED DWN: JJD DESIGN: FAJ DATE: APRIL 2013
DWG. NO. AS NOTED JOB NO. 157-045-20

no.	date	Revisions	appv.

Sheet
E.9.0

c:\Projects-Lookout-Group\Crystal-Falls-West_Sec1_WRP_LiftSta_PropSta_044-045-046\Const-Plans_WRP\3rd-Set\CFW-Sec1_WRP_Sh-E.9.0_Elec1-Leg-Key-Sheet.dwg

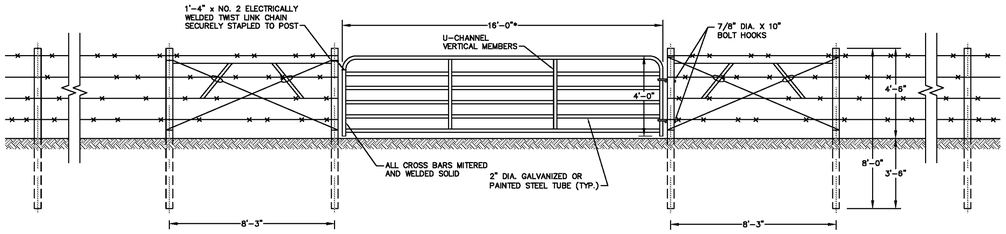

NOTES:

ALL GATES ARE 16'-0" WIDE UNLESS R/W AGREEMENT STATES OTHERWISE.

ALL GATES WILL HAVE A SINGLE OR DOUBLE PANEL AT EACH END.

*TYPE G-3 GATES ARE AVAILABLE IN WIDTHS FROM 4' TO 20' IN 2" INCREMENTS.

Metal Farm Entrance Gate (Type G-3)

N.T.S.

Curve Table				
Curve #	Length	Radius	Delta	Chord
C1	41.19'	60.00	39°19'51"	40.38'
C2	14.16'	60.00	13°31'07"	14.12'
C3	190.45'	400.00	27°16'49"	188.66'
C4	97.23'	100.00	55°42'34"	93.45'
C5	109.01'	100.00	62°27'35"	103.69'

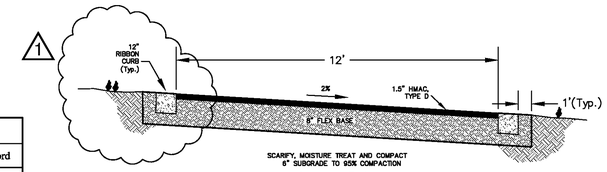

Access Drive

N.T.S.

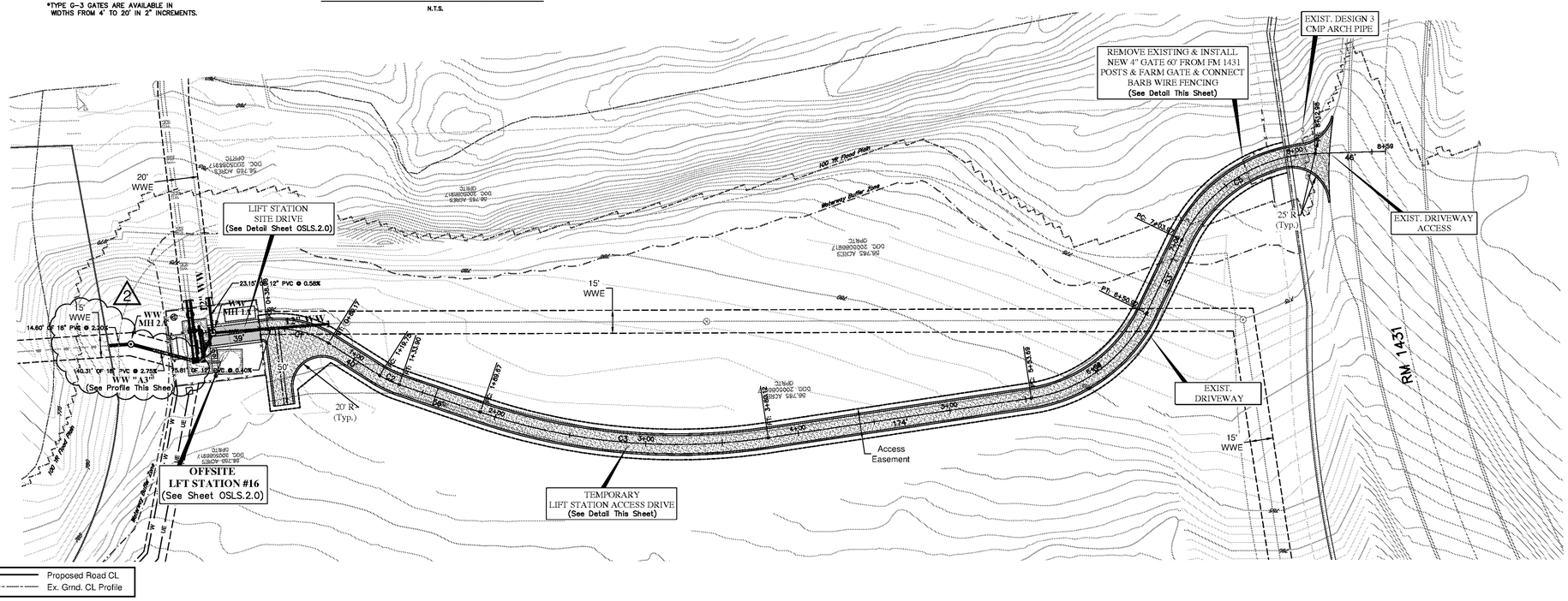

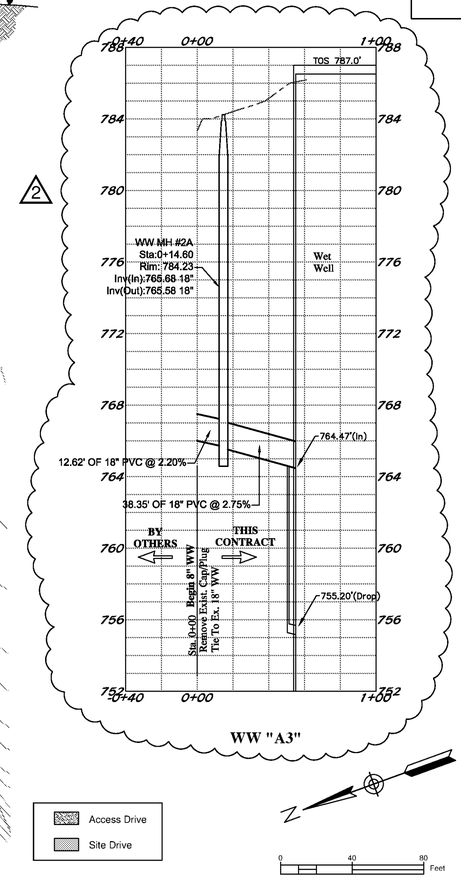

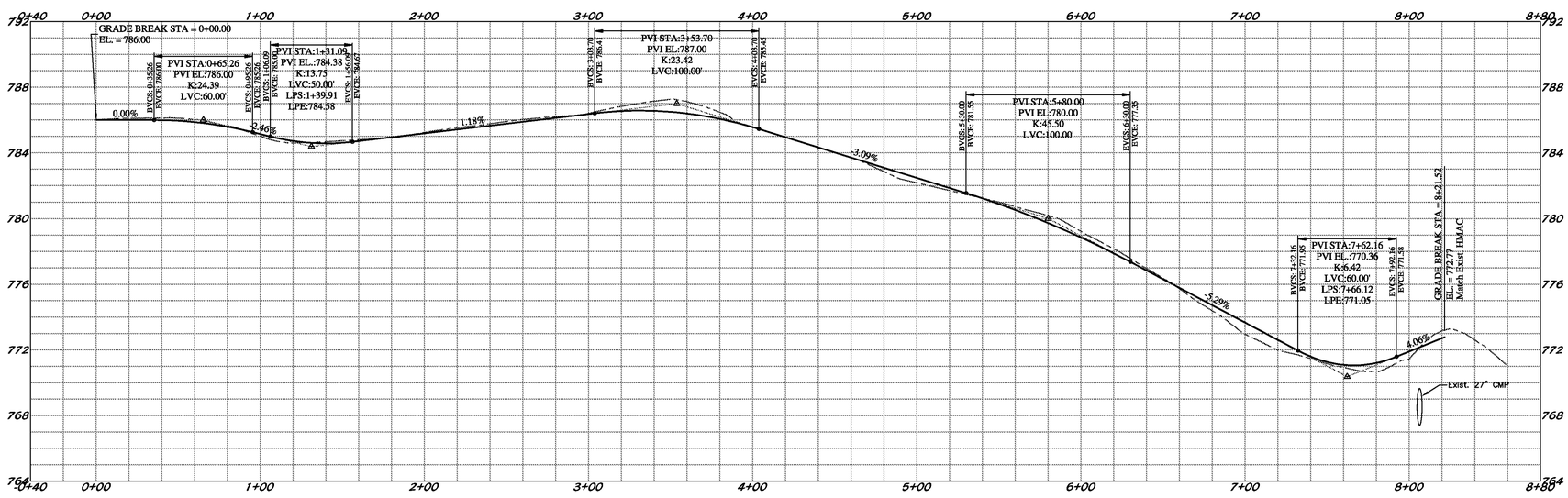

Jay Engineering Company, Inc.
P.O. Box 1220
Lakeway, Texas 78646-1220
Tel: (512) 259-3882 Fax: (512) 259-8016
Texas Registered Engineering Firm F-4780

STATE OF TEXAS
FRANK T. PHELAN
93874
LICENSED PROFESSIONAL ENGINEER
12/9/13

No.	Date	Revisions	
3	12/13	Add WW Sleeve Detail	FTP
2	11/13	Issue Opin. Prob.	FTP
1		Issue Opin.	FTP

THE LOOKOUT GROUP

SCALE: AS NOTED DWN: JJD DESIGN: FAJ DATE: APRIL 2013

DWG. NO. AS NOTED JOB NO. 157-045-20

CRYSTAL FALLS WEST SEC. 1

WRP, OFFSITE LIFT STA. & RECLAIMED WATER PUMP STA.

LIFT STA. #16 DRIVE, GRADING, E&S CONTROL PLAN

Sheet

OSLS 1.0

C:\Projects-Lookout-Group\Crystal-Falls-West_Sec1_WRP_LftSta_PmpSta_044-045-046\Const-Plans_LftSta\4th-Set\CFW-Sec1_Offsites_OSLS.1.0_Lft-Sta-Drive-Grd-E&S.dwg

WATER SERVICE NOTE:
1. RPZ TO BE MOUNTED 1' ABOVE FINISHED GRADE AND HOUSED IN HOT BOX OR APPROVED EQUAL THERMAL PROTECTION HOUSING.
2. HOSE BIB TO CONTAIN BACKFLOW PREVENTER.
3. WATER SERVICE TO BE PER CITY OF LEANDER STANDARD DETAILS.

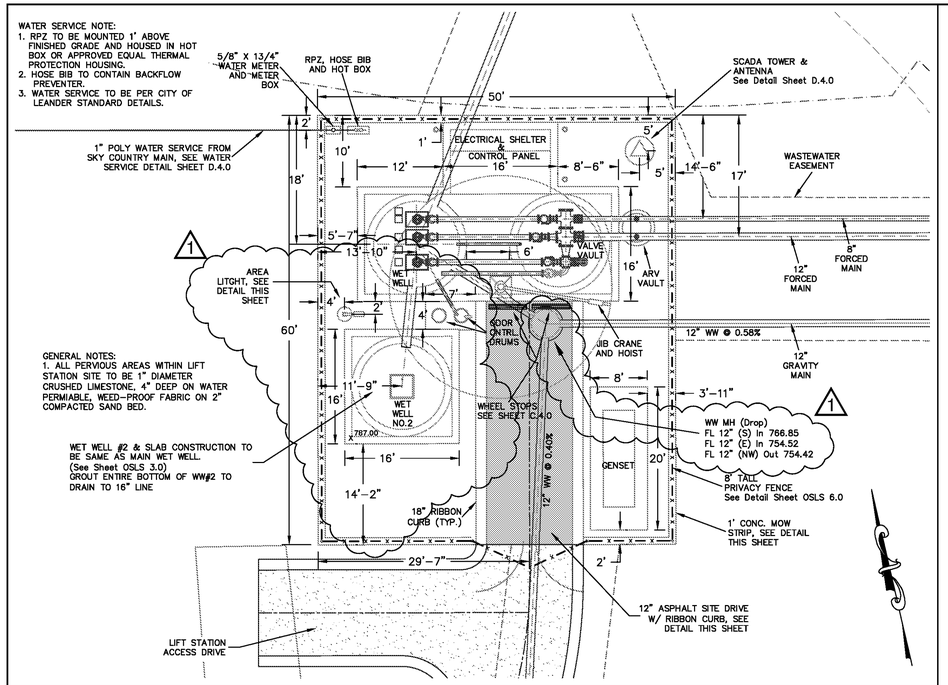

GENERAL NOTES:
1. ALL PERVIOUS AREAS WITHIN LIFT STATION SITE TO BE 1" DIAMETER CRUSHED LIMESTONE, 4" DEEP ON WATER PERMIABLE, WEED-PROOF FABRIC ON 2" COMPACTED SAND BED.

WET WELL #2 & SLAB CONSTRUCTION TO BE SAME AS MAIN WET WELL. (See Sheet OSLS 3.0) GROUT ENTIRE BOTTOM OF WW#2 TO DRAIN TO 16" LINE

SITE PLAN VIEW LIFT STATION

scale: 1"=10'

CONDUIT AND CABLE SCHEDULE

CONDUIT RUN	DESCRIPTION	ROUTING	SIZE & TYPE
PEC-XFMR	PEC ELECTRICAL SERVICE	PRIMARY CONDUITS TO PEC PAD XFMR.	UTILITY SPECIFICATIONS
XFMR-ED	SERVICE ENTRANCE	FROM PAD XFMR. TO EMERGENCY DISCONNECT	3 #1/0, 1 #6 GND., 2-1/2" C.
ED-ATS	MAIN SERVICE FEEDER	FROM EMERGENCY DISCONNECT TO ATS	3 #1/0, 1 #6 GND., 2-1/2" C.
ATS-GENSET	EMERGENCY POWER, GENSET CONTROL WIRING	AUTOMATIC TRANSFER SWITCH TO GENSET	3 #1/0, 1 #6 GND., 2-1/2" C. 4 #12, 1 #12 GND., 1" C.
ATS-PCP	EMERGENCY POWER, ATS CONTROL WIRING	PUMP CONTROL PANEL TO AUTOMATIC TRANSFER SWITCH	3 #1/0, 1 #6 GND., 2-1/2" C. 4 #12, 1 #12 GND., 1" C.
PCP-JB-P1	POWER, LEAK SENSOR AND OVERTEMP. WIRING	FROM PCP THROUGH JB TO P-1	CABLE: PUMP, MFR. SPECS, CONDUIT: MIN. (1) 2-1/2", (1)1"
PCP-JB-P2	POWER, LEAK SENSOR AND OVERTEMP. WIRING	FROM PCP THROUGH JB TO P-2	CABLE: PUMP, MFR. SPECS, CONDUIT: MIN. (1) 2-1/2", (1)1"
PCP-JB-P3	POWER, LEAK SENSOR AND OVERTEMP. WIRING	FROM PCP THROUGH JB TO P-3	CABLE: PUMP, MFR. SPECS, CONDUIT: MIN. (1) 2-1/2", (1)1"
PCP-FS	FLOAT SWITCH WIRING WIRING	FROM PCP THROUGH JB-1 TO WETWELL	MFR. SPECIFICTIONS, CONDUIT PER NEC
PCP-LT	LEVEL TRANSDUCER (ULTRASONIC)	FROM PCP THROUGH JB-1 TO WETWELL	MFR. SPECIFICTIONS, CONDUIT PER NEC
PCP-SCADA TWR.	ANTENNA CABLE/ ALARM BEACON	FROM PCP TO ANTENNA TOWER	CABLE: SCADA, MFR. SPECS,/3 #12 (3) 1" C.
PCP-LP	LOAD PANEL	FROM PCP TO LOAD PANEL	2 #2, 1 #6 GND., 1" C
LP-AREA LIGHT	AREA LIGHT	FROM LP TO AREA LIGHT	2 #12, 1 #12 GND., 1" C
LP-DR/SL	GFCI DUPLEX RECEPTICLE AND SHELTER LIGHT	FROM LP TO DUPLEX RECEPTICLE AND SHELTER LIGHT	4 #12, 1 #12 GND., 1" C
LP-SCADA	SCADA POWER	FROM LP TO SCADA	3 #12, 1" C
PCP-SCADA	SCADA I/O	FROM PCP TO SCADA	11 #12, 1" C

GENERAL NOTES:

1. PROVIDE PERMANENT WATERPROOF TAGS FOR ALL WIRES, TAGS SHALL BE CONSISTENT THROUGHOUT THE ENTIRE LENGTH OF THE CONDUCTOR AND SHALL BE AS SHOWN ON THE ELECTRICAL WIRING OR SCHEMATIC DIAGRAMS AS APPLICABLE.
2. CONDUITS FROM J-BOX TO WETWELLS SHALL BE SCHEDULE 80 PVC. MINIMUM SIZE OF 2-1/2".
3. DUCT SEAL CABLE ENTRANCES FROM WETWELL INTO J-BOX AND FROM JUCTION BOX INTO PUMP CONTROL PANEL.
4. TRANSFORMER PAD TO BE PER CURRENT PEC SPECIFICTIONS.
5. ALL WORK TO BE PER NEC, LATEST EDITION.
6. ALL LIFT STATION EQUIPMENT AND CONTROLS TO BE INTRINSICALLY SAFE.
7. SEE GROUNDWELL DETAIL SHEET E.8.0

GENSET MONITOR CIRCUITS
1. GENSET STATUS
2. GENSET TROUBLE

ATS MONITOR CIRCUITS
1. ATS STATUS
2. ATS TROUBLE
3. GENSET STATUS (PASS THROUGH)
4. GENSET TROUBLE (PASS THROUGH)

ELECTRICAL LOAD CHART

ELECTRICAL LOAD CHART @ 480 V, 3ø, 3W SERVICE			
LOAD DESCRIPTION		LOAD CURRENT (AMPERES)	
		PHASE I	PHASE II
MOTORS, FLA		106	132
25% LARGEST MOTOR		13	16
OTHERS		10	10
TOTAL:	AMPS	129	159
	KVA	107	132
SERVICE CONDUCTORS: 3 #1/0, 1 #6 GND., 2-1/2" C.			

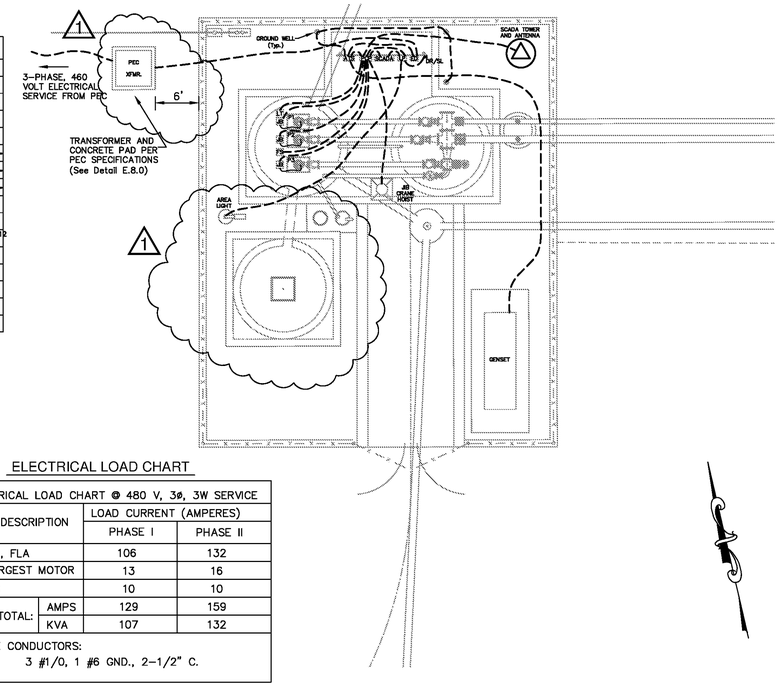

ELECTRICAL SITE PLAN LIFT STATION

scale: 1"=10'

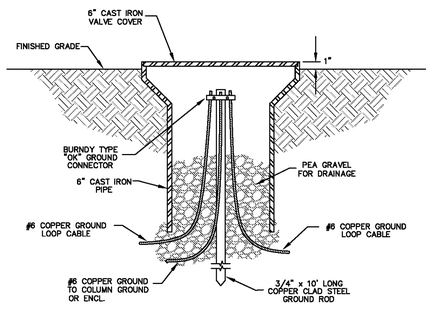

NOTE:
1. PROVIDE GROUND WELL FOR EACH LOCATION SHOWN ON THE DRAWINGS.
2. GROUND WELLS TO BE LOCATED APPROXIMATELY 1' FROM SLABS AS SHOWN ON THE DRAWINGS.

GROUNDWELL DETAIL

N.T.S.

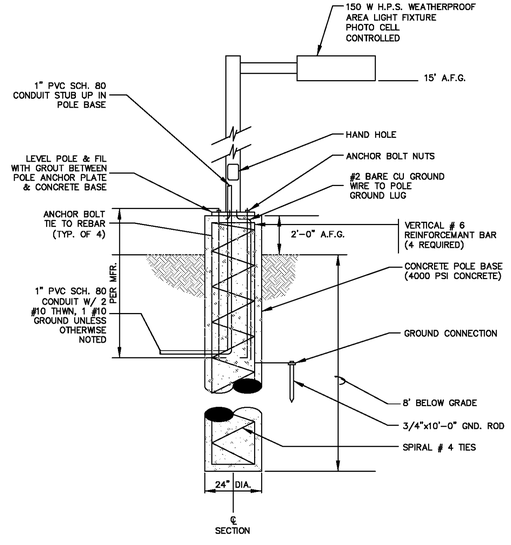

AREA LIGHTING POLE ELEVATION

N.T.S.

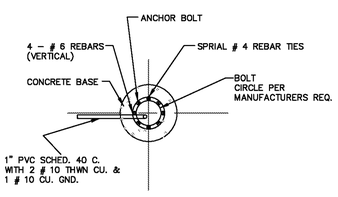

AREA LIGHTING POLE FOUNDATION PLAN

N.T.S.

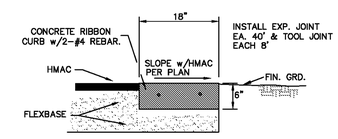

RIBBON CURB

N.T.S.

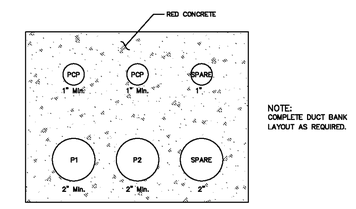

NOTE:
COMPLETE DUCT BANK LAYOUT AS REQUIRED.

SECTION A-A

N.T.S.

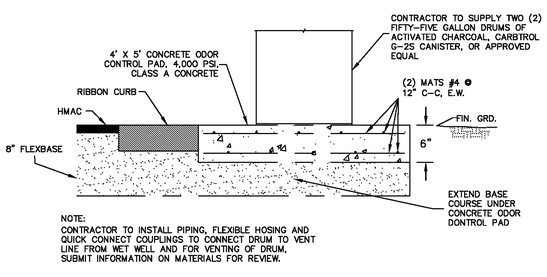

NOTE:
CONTRACTOR TO INSTALL PIPING, FLEXIBLE HOSING AND QUICK CONNECT COUPLINGS TO CONNECT DRUM TO VENT LINE FROM WET WELL AND FOR VENTING OF DRUM. SUBMIT INFORMATION ON MATERIALS FOR REVIEW.

ODOR CONTROL

N.T.S.

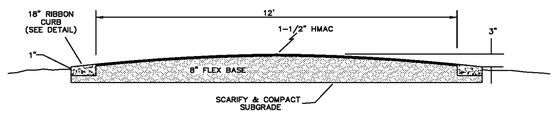

SECTION - L.S. SITE DRIVE

N.T.S.

KOHLER MODEL 180REOZJG
180 KW DIESEL GENERATOR OR EQUAL
w/ WEATHERPROOF ENCLOSURE AND SOUND ATTENUATION

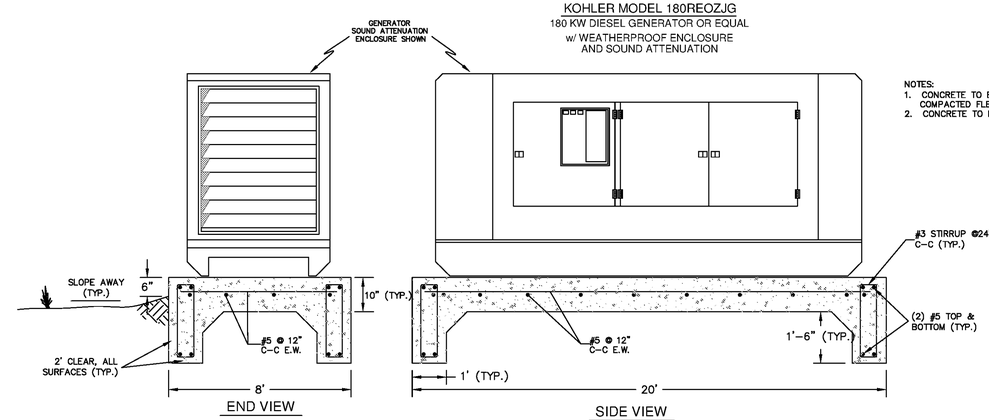

NOTES:
1. CONCRETE TO BE PLACED ON 12" COMPACTED FLEXBASE PAD PER SPECS
2. CONCRETE TO BE 4,000 PSI CLASS A.

GENSET FOUNDATION PLAN

N.T.S.

STATE OF TEXAS
FRANK T. PHELAN
93874
LICENSED PROFESSIONAL ENGINEER
11/25/13

THE LOOKOUT GROUP

SCALE: AS NOTED | DWN: FTP | DESIGN: FTP | DATE: JUNE 2013
DWG. NO. AS NOTED | JOB NO. 193-030-20

No.	Date	Revisions	By
1	11/13	WW #2 Relocation WW Replac Elevs.	FTP

CRYSTAL FALLS WEST - SEC. 1
WRP, OFFSITE LIFT STA. & RECLAIMED WATER PUMP STA.

LIFT STATION #16
SITE & ELECTRICAL PLANS AND DETAILS

Sheet
OSLS 2.0

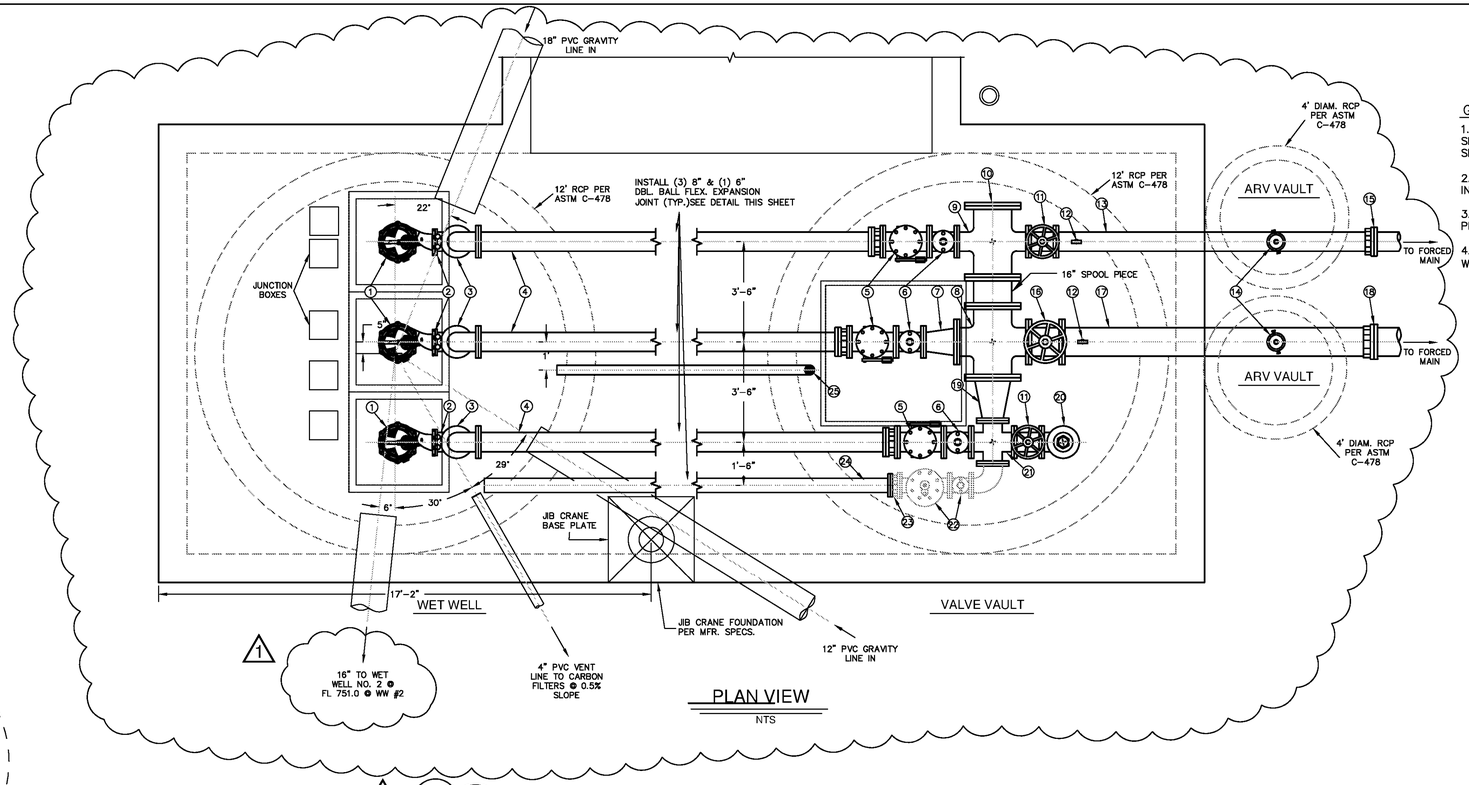

PLAN VIEW

NTS

GENERAL NOTES:

1. MANUFACTURER OF TREATMENT EQUIPMENT SHALL BE RESPOSIBLE FOR ADEQUATE SIZING OF GATES, PIPES, WEIRS AND OPENINGS TO PASS FLOWS REQUIRED AND AS SHOWN IN HYDRAULIC PROFILE OR SPECIFICATIONS.
2. ALL HOSE BIBS SHALL BE ⅝" UNLESS OTHERWISE STATED. VACUUM BREAKERS TO BE INSTALLED ON ALL HOSE BIBS.
3. ALL EXPOSED NON-POTABLE WATER PIPING SHALL BE COLOR-CODED AND SIGNED PER TCEQ RULES.
4. WALKWAYS AND STAIRS TO HAVE KICK PLATES PER OSHA REQUIREMENTS (TYP. ALL WALKWAYS AND STAIRS)

STRUCTURAL NOTES

1. BACKFILL WET WELL WITH APPROVED GRANULAR MATERIAL HAVING A PI BETWEEN 4 &15. COMPACT IN 12" LIFTS.
2. COMPACT STRUCTURAL FILL IN 8" LIFTS TO 95% MAX. DENSITY PER TEX 113-E. MOISTURE CONTENT WITHIN 2% OPTIMUM, PER STANDARD PROCTOR(ASTM D 698).
3. THE TOP 24" OF FILL TO BE LOW PERMEABILITY, LOW PLASTICITY FILL.

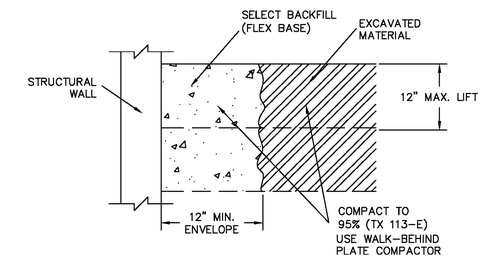

BACKFILL DETAIL

(ALL WET WELLS, TYP.)

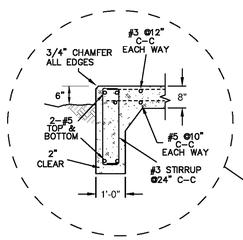

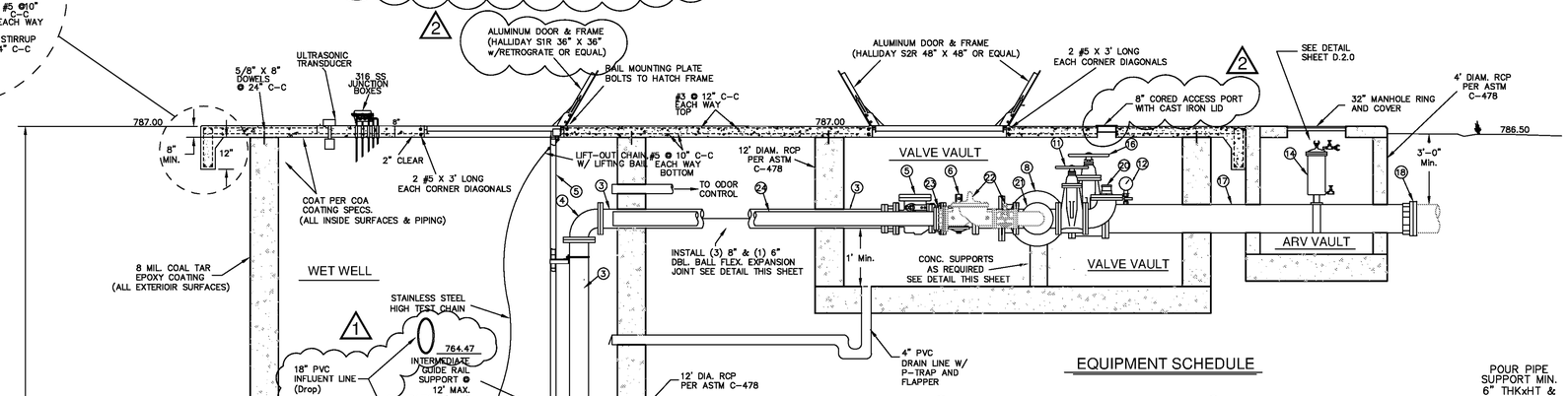

PROFILE

NTS

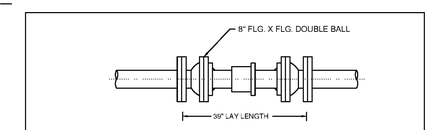

FLEX. EXPANSION JOINT DETAIL

NTS

EQUIPMENT SCHEDULE

1. — (3) SUBMERSIBLE PUMPS & MOTOR ASSEMBLY (BARNES 6XSHV) (@ 350 gpm @ 73.5' tdh)
2. — 304 SS 2" DIAMETER GUIDE RAILS
3. — 8" D.I. PIPE, FLANGED VERT., FLANGE X P.E. HORIZ.
4. — 8" 90° D.I., FLANGED
5. — 8" CHK VALVE, FLANGED, OWL W/ FCA & RET. GLANDS
6. — 8" ECCENTRIC PLUG VALVE, FLANGED
7. — 12" X 8" CONC. RED., FLANGE X FLANGE
8. — 12" X 16" CROSS, FLANGE X FLANGE
9. — 8" X 16" CROSS, FLANGE X FLANGE
10. — 16" BLIND FLANGE
11. — 8" GATE VALVE, FLANGED
12. — 1" BALL VALVE w/PRESSURE GAUGE (0 – 100 PSI)
13. — 8" D.I. PIPE, FLANGE X PE
14. — AIR RELEASE VALVE
15. — 8" TRANS. GASKET W/ RET. GLANDS
16. — 12" GATE VALVE, FLANGED
17. — 12" D.I. PIPE, FLANGE X PE
18. — 12" TRANS. GASKET W/ RET. GLANDS
19. — 16" X 8" CONC. RED., FLANGE X FLANGE
20. — 8" 90° D.I., FLANDGED W/ 4" QUICK DISCONNECT
21. — 8" BLIND FLANGE
22. — FUTURE ISO. & SURGE ANTICIPATION VALVES
23. — 6" FCA W/ RET. GLANDS AND BLIND FLANGE
24. — 6" D.I. PIPE, FLANGE X PE
25. — 4" PVC DRAIN LINE W/ SCREEN, TRAP AND FLAPPER

NOTES:

1. SUPPLY ALUMINUM ACCESS LADDER FOR VALVE VAULT.
2. ALL CABLES SUSPENDED FROM STAINLESS STEEL CABLE HOOKS (MIN. 8 HOOKS) USING HEAVY DUTY WIRE TIES (120 LB).
3. ALL HARDWARE IN WET WELL AND VALVE VAULT TO BE TYPE 316 STAINLESS STEEL UNLESS SPECIFIED OTHERWISE.
4. SEE PLAN VIEW FOR PROPER ORIENTATION OF WET WELL PENETRATIONS.
5. WET WELL INTERIOR TO BE COATED PER CITY OF AUSTIN SPL, EXTERIOR TO BE COATED WITH COAL TAR EPOXY. VALVE VAULT EXTERIOR TO BE COATED WITH COAL TAR EPOXY.

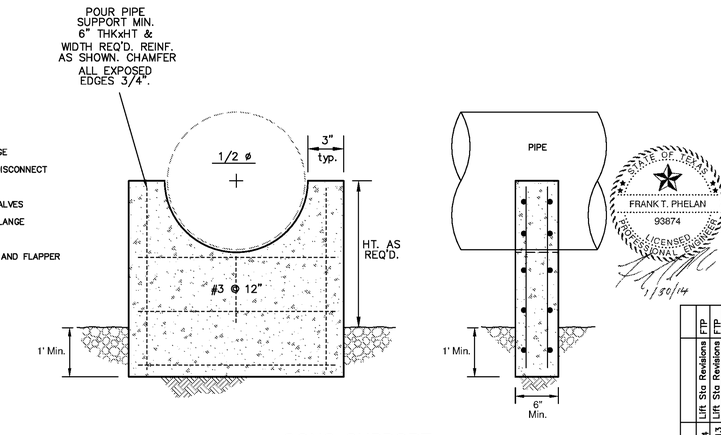

CONC. SUPPORT

STATE OF TEXAS FRANK T. PHELAN 93874 LICENSED PROFESSIONAL ENGINEER 1/30/14

no.	date	Revisions	appv.
2	1/14	Lift Sta Revisions	FTP
1	11/13	Lift Sta Revisions	FTP

THE LOOKOUT GROUP

SCALE: AS NOTED DWN: JJD DESIGN: FAJ DATE: APRIL 2013
DWG. NO. AS NOTED JOB NO. 157-046-20

Sheet **OSLS 3.0**

STATE OF TEXAS FRANK T. PHELAN 93874 PROFESSIONAL ENGINEER 5/13/13

Jay Engineering Company, Inc.
P.O. Box 1220
Leander, Texas 78646-1220
Tel. (512) 259-3882 Fax. (512) 259-9016
Texas Registered Engineering Firm F-4780

CRYSTAL FALLS WEST - SEC. 1
WRP, OFFSITE LIFT STA. & RECLAIMED WATER PUMP STA.

OFFSITE LIFT STATION #16
PLAN & PROFILE

C:\Projects-Lookout-Group\Crystal-Falls-West_Sec1_WRP_LiftSta_PmpSta_044-045-046\Const-Plans_LiftSta\4th-Set\CFW-Sec1_Offsites_OSLS 3.0_Lift-Sta-Plan-Profile_rev-01-27-14.dwg

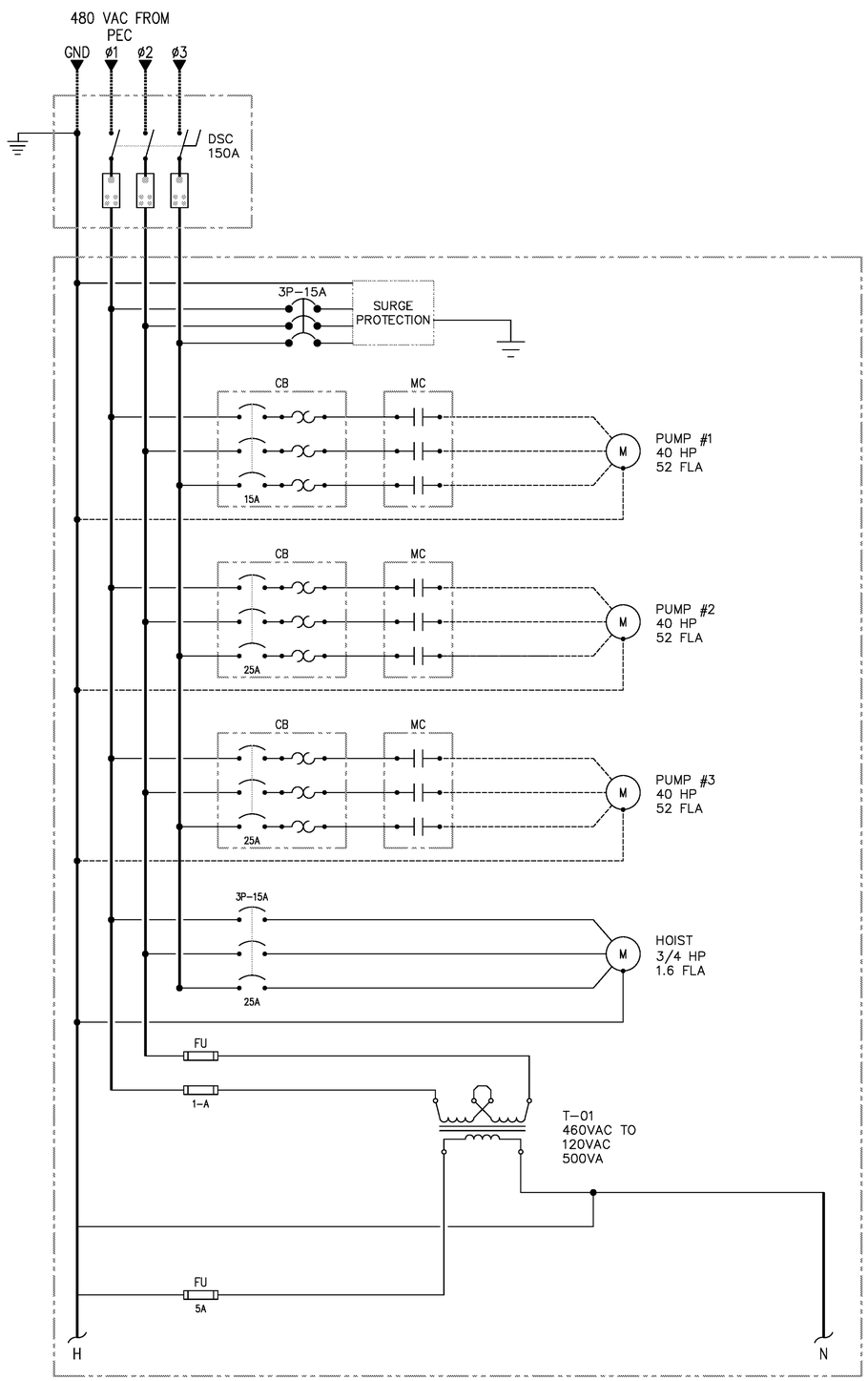

CIRCUIT BREAKER PANEL LP-B SCHEDULE 10K AIC

VOLTS: 120 AMPS: 200 MCB: 80 PHASE/WIRING: 1ø

CIRCUIT BREAKER SIZE	CKT. NO.	LOAD DESCRIPTION	PHASE A	PHASE B	LOAD DESCRIPTION	CKT. NO.	CIRCUIT BREAKER SIZE
15A	1	PUMP CONTROLS			SCADA	2	15A
15A	3	PANEL LIGHT			AREA LIGHT	4	15A
15A	5	SHELTER LIGHT			GFCI RECEPTACLE	6	20A
15A	7	SPARE			SPARE	8	15A
15A	9	SPARE			SPARE	10	15A
15A	11	SPARE			SPARE	12	15A
	13					14	

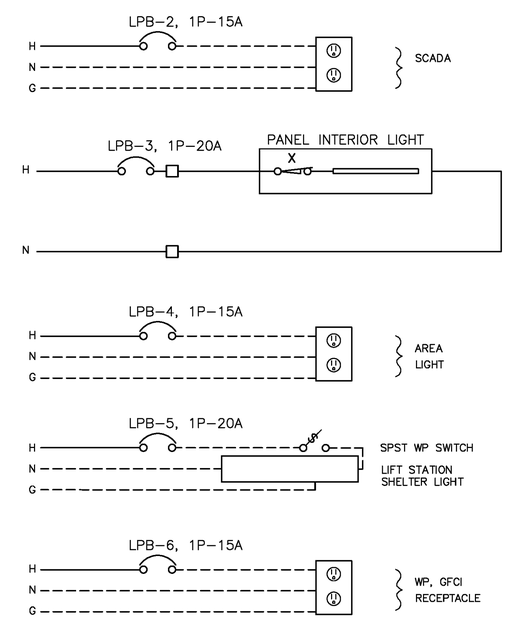

KEYNOTES:

1. OVERLOAD INTERNAL TO STARTER.
2. CURRENT SENSOR INTERNAL TO STARTER.
3. MINIMIZE LENGTH OF SURGE PROTECTOR LEADS AVOID BENDS. USE LOW IMPEDANCE WIRE. FOLLOW MANUFACTURER'S RECOMMENDATIONS.

☐ – TB CONNECTION

SEE ONE–LINE DIAGRAM FOR WIRE SIZE.

SUBMIT ELECTRICAL POWER DIAGRAM FOR ENGINEERING APPROVAL

STATE OF TEXAS
FRANK T. PHELAN
93874
LICENSED
PROFESSIONAL ENGINEER
9/4/13

Jay Engineering Company, Inc.
P.O. Box 1220
Leander, Texas 78646-1220
Tel.: (512) 259-3092 Fax.: (512) 259-8016
Texas Registered Engineering Firm F–4780

CRYSTAL FALLS WEST SEC. 1
WRP, OFFSITE LIFT STA. & RECLAIMED WATER PUMP STA.

LIFT STATION #16
ELECTRICAL POWER DIAGRAM

THE LOOKOUT GROUP

SCALE: AS NOTED DWN: JJD DESIGN: FAJ DATE: APRIL 2013
DWG. NO. AS NOTED JOB NO. 157–045–20

No.	date	Revisions	appv.

Sheet
OSLS
4.0

C:\Projects–Lookout–Group\Crystal–Falls–West_Sec1_WRP_LiftSta_PhysSto_044–045–046\Const–Plans_LiftSta\4th–Set\CFW–Sec1_Offsites_OSLS.4.0_Lift–Sta–Elec–Pwr–Dgrm_rev–072813.dwg

NOTES:

1. EXISTING UTILITY LOCATIONS SHOWN HEREON ARE APPROXIMATE. CONTRACTOR IS TO VERIFY LOCATIONS OF ALL EXISTING UTILITY LINES PRIOR TO COMMENCING WORK.

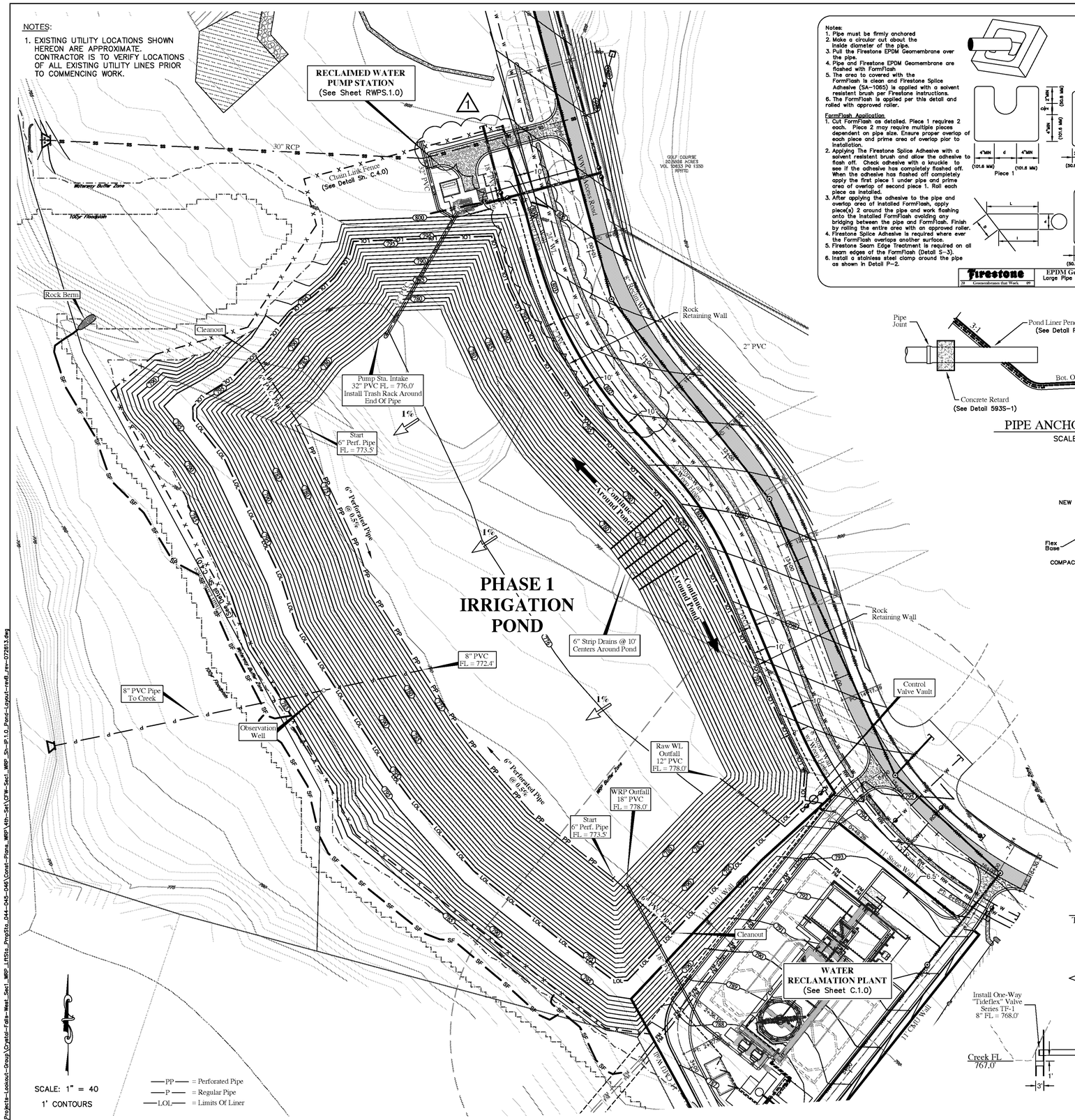

Notes:
1. Pipe must be firmly anchored
2. Make a circular cut about the inside diameter of the pipe.
3. Pull the Firestone EPDM Geomembrane over the pipe.
4. Pipe and Firestone EPDM Geomembrane are flashed with FormFlash
5. The area to covered with the FormFlash is clean and Firestone Splice Adhesive (SA-1065) is applied with a solvent resistant brush per Firestone instructions.
6. The FormFlash is applied per this detail and rolled with approved roller.

FormFlash Application
1. Cut FormFlash as detailed. Piece 1 requires 2 each. Piece 2 may require multiple pieces dependent on pipe size. Ensure proper overlap of each piece and prime area of overlap pior to installation.
2. Applying The Firestone Splice Adhesive with a solvent resistent brush and allow the adhesive to flash off. Check adhesive with a knuckle to see if the adhesive has completely flashed off. When the adhesive has flashed off completely apply the first piece 1 under pipe and prime area of overlap of second piece 1. Roll each piece as installed.
3. After applying the adhesive to the pipe and overlap area of installed FormFlash, apply piece(s) 2 around the pipe and work flashing onto the installed FormFlash avoiding any bridging between the pipe and FormFlash. Finish by rolling the entire area with an approved roller.
4. Firestone Splice Adhesive is required where ever the FormFlash overlaps another surface.
5. Firestone Seam Edge Treatment is required on all seam edges of the FormFlash (Detail S-3).
6. Install a stainless steel clamp around the pipe as shown in Detail P-2.

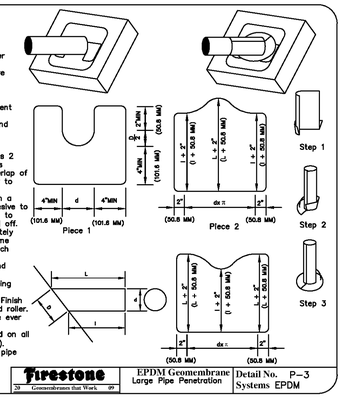

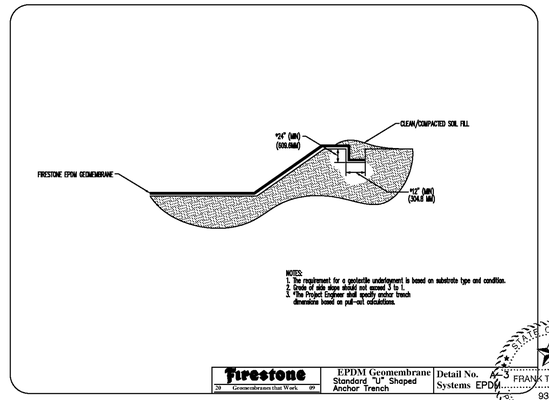

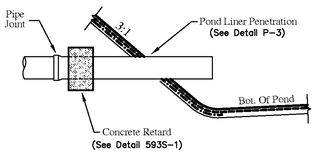

NOTES:

1. ANCHOR FINAL JOINT OF PIPE INTO POND WITH CONCRETE RETARD BEHIND POND SLOPE.

PIPE ANCHORING DETAIL

SCALE: N.T.S.

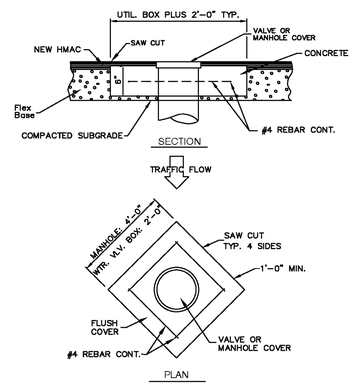

CLEANOUT/WELL CAP

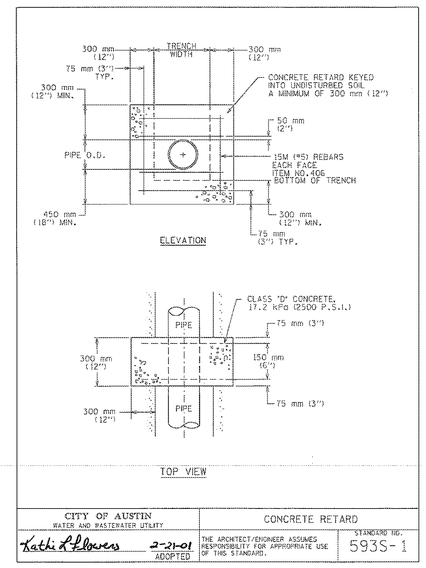

NOTES:

1. GEOMEMBRANE SHALL BE FIRESTONE 1.14MM(0.045") EPDM GEOMEMBRANE OR APPROVED EQUAL.
2. GEOMEMBRANE SEAMS SHALL BE ORIENTED VERTICALLY ON SLOPES. NO HORIZONTAL SEAMS ON SLOPES ARE PERMITTED.
3. 8 OZ. NON-WOVEN GEOTEXTILE SHALL BE MIRAFI 180N OR APPROVED EQUAL.
4. 6" STRIP DRAINS SHALL BE SITEDRAIN STRIP 6000 OR APPROVED EQUAL.
5. GRAVEL UNDERDRAIN AGGREGATE SHALL CONSISIT OF HARD, DURABLE, CLEAN, WASHED GRAVEL OR CRUSHED STONE, RANGING IN SIZE FROM 5/8" TO 1" AND BE FREE FROM ORGANIC MATTER, CLAY BALLS, OR OTHER DELETERIOUS MATTER.

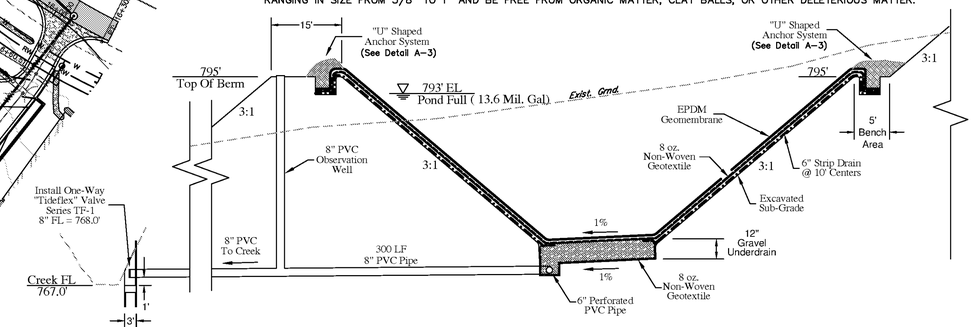

IRRIGATION POND LINER SYSTEM

SCALE: N.T.S.

No.	Date	Revisions	By
1	12/13	Revised Grading	FTP

STATE OF TEXAS — DAVID F. SIMONS — 94866 — PROFESSIONAL ENGINEER — 6/26/2013

STATE OF TEXAS — FRANK T. PHELAN — 93874 — LICENSED PROFESSIONAL ENGINEER — 11/29/13

Jay Engineering Company, Inc.
P.O. Box 1220
Austin, Texas 78646-1220
Tel: (512) 258-3892 Fax: (512) 258-8016
TEXAS REGISTERED ENGINEERING FIRM F-4780

CRYSTAL FALLS WEST Sec. 1
WW, RECLAIMED WATER & WATER IMPROVEMENTS

PHASE 1 IRRIGATION POND

THE LOOKOUT GROUP

SCALE: AS NOTED | DWN: JJD | DESIGN: SDK | DATE: JUNE 2013
DWG. NO. AS NOTED | JOB NO. 193-030-20

Sheet
IP.1.0

C:\Projects-Lookout-Group\Crystal-Falls-West_Sec1_WRP_LiftSta_PropSto_044-045-046\Const-Plans_WRP\4th-Set\CFW-Sec1_WRP_Sh-IP.1.0_Pond-Layout-rev8_rev-072813.dwg

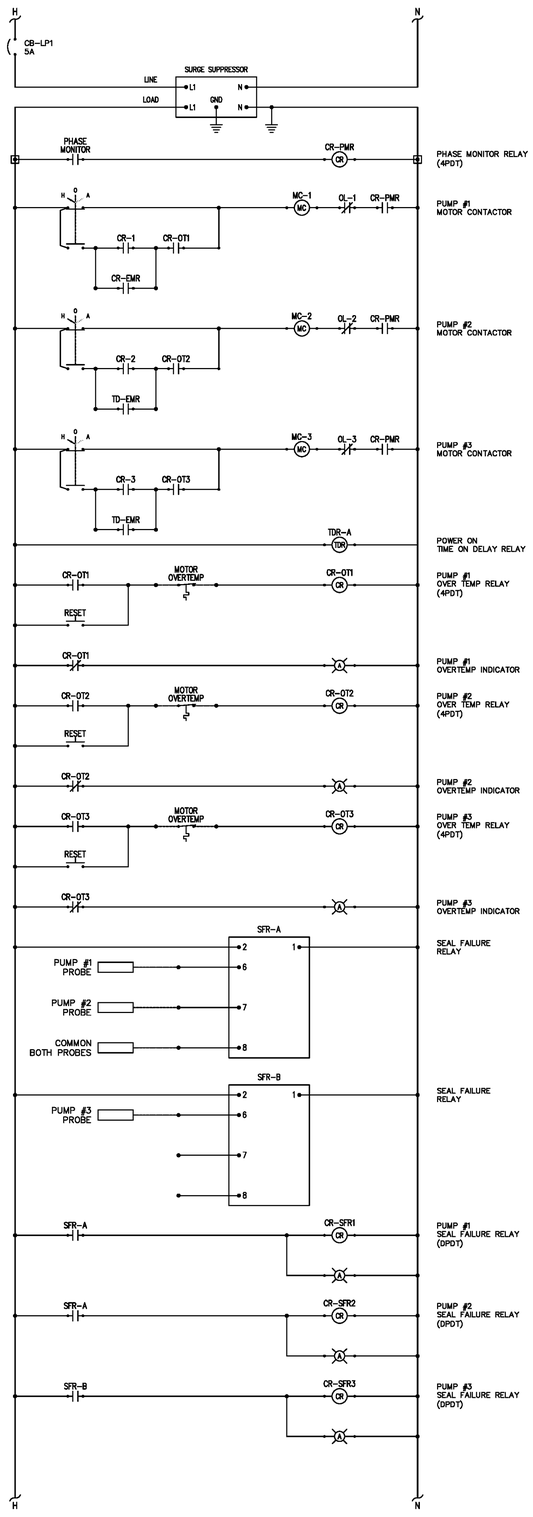

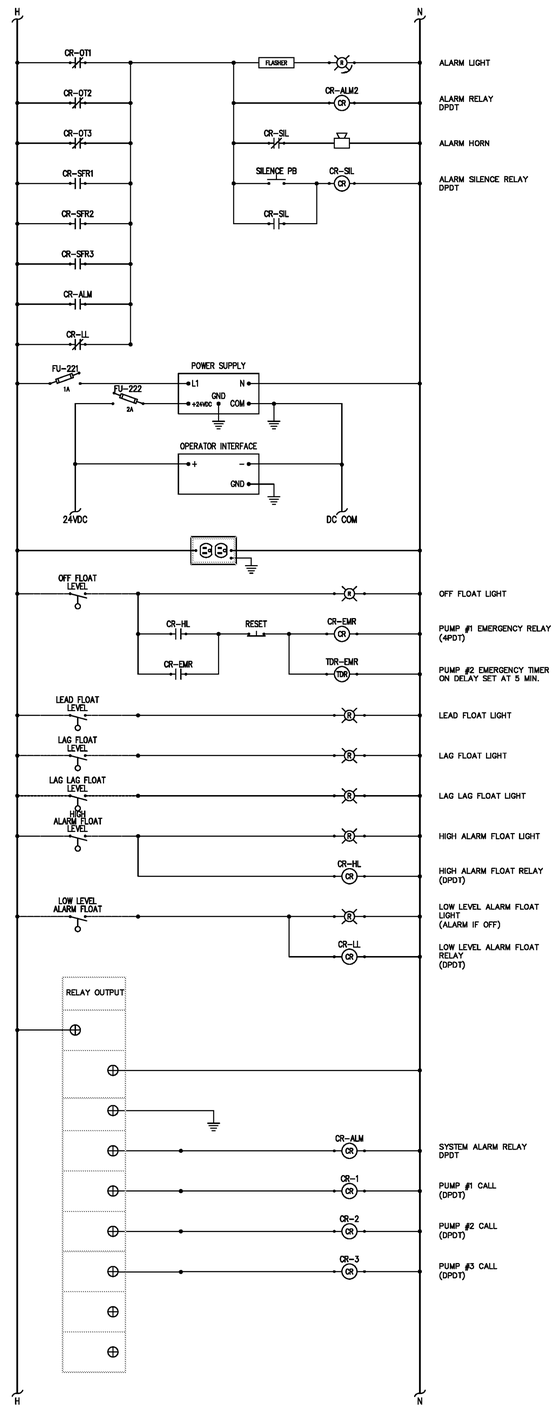

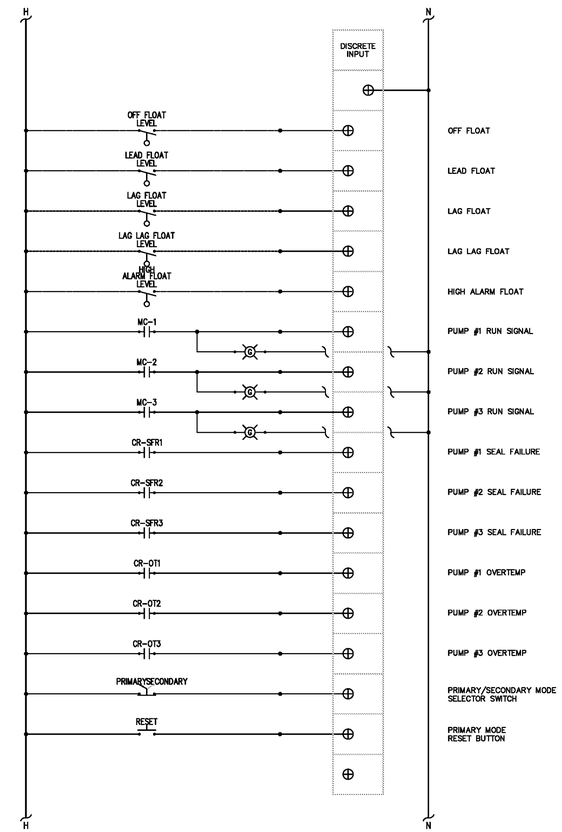

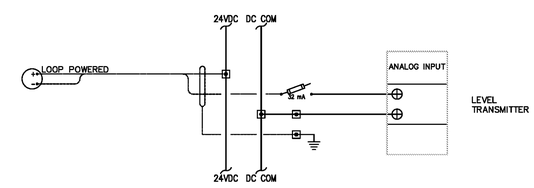

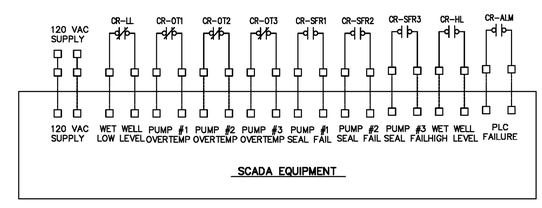

CITY OF LEANDER SCADA SYSTEM INPUTS

GENERAL NOTES:

1. PRIMARY PUMP CONTROL TO BE VIA LEVEL SENSOR INPUT THROUGH PLC.
2. IN CASE OF A LEVEL SENSOR INPUT FAILURE, PLC TO AUTOMATICALLY SWITCH TO FLOAT INPUT FOR PUMP OPERATION.
3. IN THE EVENT OF A PLC FAILURE, PUMPS TO SWITCH TO AUTOMATIC TIMER OPERATION.
4. DUCT SEAL CABLE ENTRANCES FROM WET WELL INTO J-BOX AND PUMP CONTROL PANEL.
5. ALL WORK TO BE PER NEC, LATEST EDITION.
6. SUBMIT ELECTRICAL ONE-LINE DIAGRAMS AND PUMP CONTROL SCHEMATICS FOR ENGINEERING APPROVAL.

FRANK T. PHELAN 93874 LICENSED PROFESSIONAL ENGINEER 5/3/13

Jay Engineering Company, Inc.
P.O. Box 1220
Leander, Texas 78646-1220
Tel: (512) 259-3882 Fax: (512) 259-9016
Texas Registered Engineering Firm F-4780

CRYSTAL FALLS WEST - SEC. 1
WRP, OFFSITE LIFT STA. & REGLAIMED WATER PUMP STA.

LIFT STATION #16 ELECTRICAL SCHEMATIC

THE LOOKOUT GROUP

SCALE: AS NOTED | DWN: JJD | DESIGN: FAJ | DATE: APRIL 2013
DWG. NO. AS NOTED | JOB NO. 157-045-20

no.	date	Revisions	appv.

Sheet
OSLS 5.0

C:\Projects-Lookout-Group\Crystal-Falls-West_Sec1_WRP_LftSta_PrepSta_044-045-046\Const-Plans_LftSta\3rd-Set\CFW-Sec1_Offsites_OSLS.5.0_Lft-Sta-Elec-Schmtic.dwg

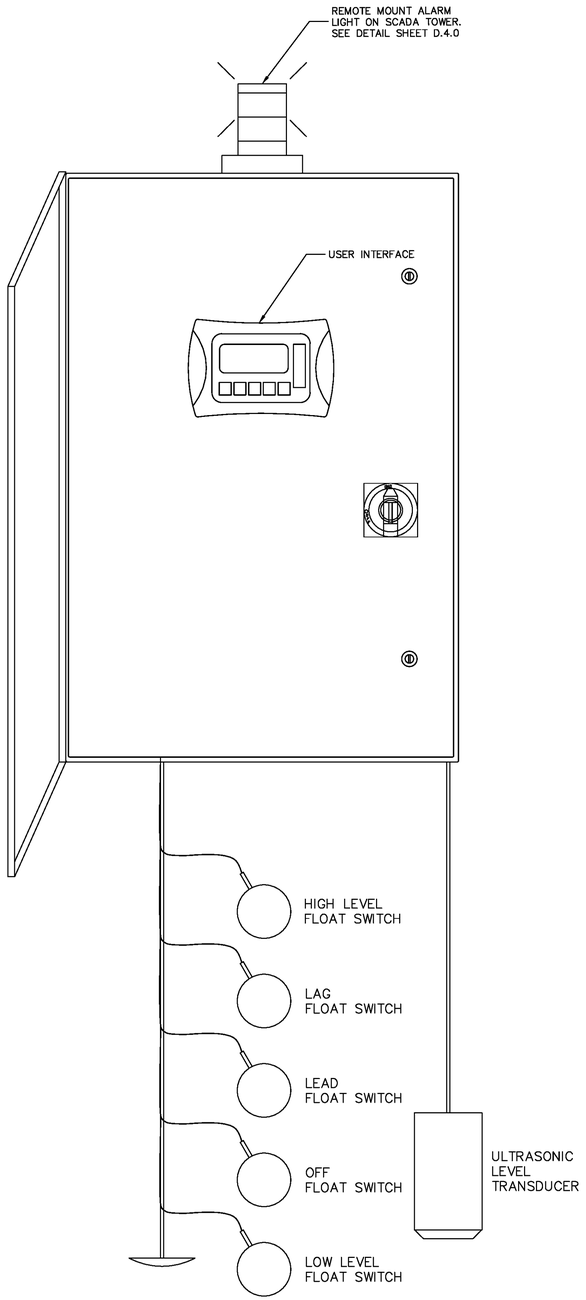

TYP. PCP PANEL LAYOUT

N.T.S.

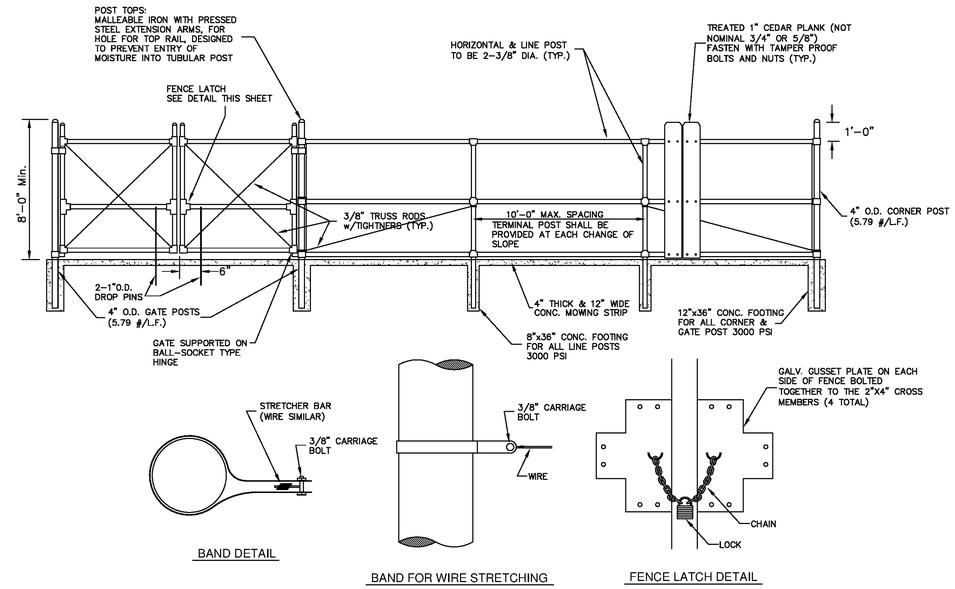

BAND DETAIL

BAND FOR WIRE STRETCHING

FENCE LATCH DETAIL

FENCE NOTES:

1.) THE GATE SHALL COME COMPLETE WITH TAMPER PROOF FRAMES, HINGES, BRACED AND PAD LOCKABLE. THE HINGES SHALL NOT TWIST OR TURN UNDER THE ACTION OF THE GATE. THE GATE SHALL BE INSTALLED SO THAT IT MAY NOT BE REMOVED WITHOUT DISASSEMBLING THE HARDWARE. THE HARDWARE ATTACHMENT BOLTS SHALL BE PEENED SO THAT REMOVAL WILL BE DIFFICULT.

2.) MOWING STRIP SHALL BE FORMED FROM DOMESTIC PORTLAND CEMENT WITH REGULAR AGGREGATE. IT SHALL BE TWELVE (12) INCHES WIDE AND A MINIMUM OF FOUR (4) INCHES THICK WITH TWO (2) INCHES ABOVE GROUND LEVEL. TWO (2) ROWS OF NUMBER THREE (3) BARS OF STEEL SHALL BE EVENLY SPACED ALONG THE FULL LENGTH OF THE MOW STRIP, AND A NUMBER THREE (3) BAR OF STEEL SHALL BE CROSS-TIED EVERY FOUR (4) FEET. EXPANSION JOINTS SHALL BE INSTALLED EVERY TWENTY (20) FEET. FENCE POST SHALL BE INSTALLED IN CENTER OF MOW STRIP.

3.) ALL POST SHALL BE SET PLUM AND SPACED AT MAXIMUM OF TEN (10) FEET APART. THE FENCE SHALL BE INSTALLED TO MAINTAIN NOT MORE THAN TWO (2) INCHES OF CLEARANCE FROM FINISHED GRADE.

4.) CENTER POST SHALL BE BRACED IN BOTH DIRECTIONS.

5.) FENCE HARDWARE TO BE RUST PROOF (H.D.G.) AND TAMPER PROOF.

6.) CEDAR PLANKS SHALL BE 1 INCH THICK X 8 FOOT TALL. (ACTUAL DIMENSIONS, NOT NOMINAL.)

SECURITY FENCE DETAILS

scale: N.T.S.

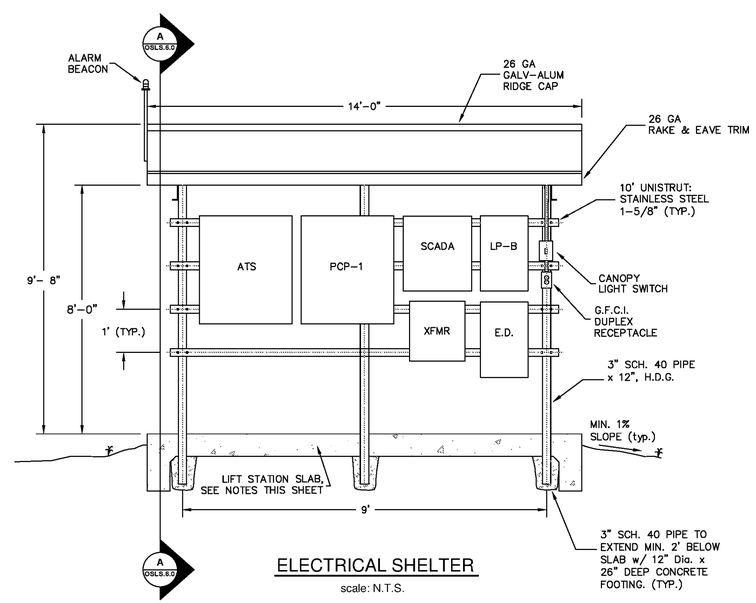

ELECTRICAL SHELTER

scale: N.T.S.

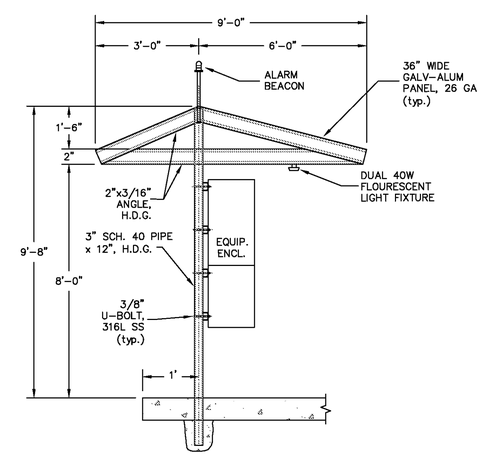

SHELTER SECTION A OSLS.6.0

scale: N.T.S.

NOTES:
1. ALL ENCLOSURES TO BE NEMA 3R.
2. SLAB TO BE 8"x16'x9' WITH #4 BARS @ 12" C-C E.W.
3. SLAB EXTERIOR BEAMS TO BE 1' WIDE x 1'-4" TO BOTTOM OF SLAB WITH (2) #6 TOP & BOTTOM AND #4 CLOSED STIRRUPS AT 18" O.C.
4. ALARM BEACON MOUNTING HEIGHT AS NECESSARY FOR VISIBILTY FROM ROAD.

FRANK T. PHELAN 93874 PROFESSIONAL ENGINEER STATE OF TEXAS 4/16/13

Jay Engineering Company, Inc.
P.O. Box 1220
Leander, Texas 78646-1220
Tel.: (512) 259-9088 Fax.: (512) 259-9016
Texas Registered Engineering Firm F-4780

CRYSTAL FALLS WEST SEC. 1
WRP, OFFSITE LIFT STA. & RECLAIMED WATER PUMP STA.

LIFT STATION #16
PUMP CONTROL PANEL & SHELTER

THE LOOKOUT GROUP

SCALE: AS NOTED DWN: JJD DESIGN: FAJ DATE: APRIL 2013
DWG. NO. AS NOTED JOB NO. 157-045-20

no.	date	Revisions	dpv.

Sheet
OSLS 6.0

C:\Projects-Lookout-Group\Crystal-Falls-West_Sec1_WRP_LiftSta_PmpSta_044-045-046\Const-Plans_LiftSta\3rd-Set\CFW-Sec1_Offsites_OSLS.6.0_Lift-Sta-Panel-Shelter.dwg

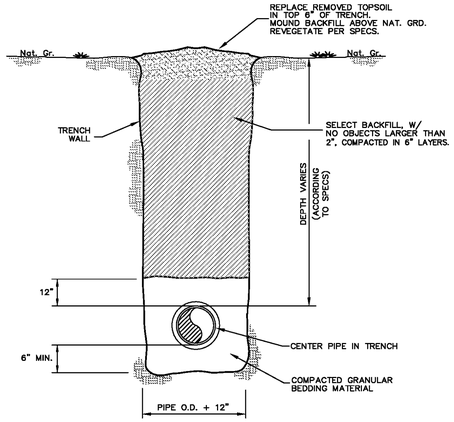

TYPICAL PIPE TRENCH AND EMBEDMENT

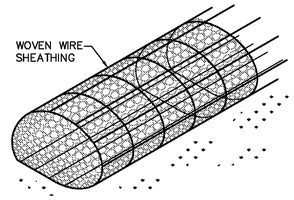

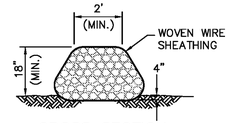

CROSS SECTION

NOTES:

1. USE ONLY OPEN GRADED ROCK 4 – 8 INCH DIAMETER FOR STREAMFLOW CONDITION; USE OPEN GRADED ROCK 3 – 5 INCH DIAMETER FOR OTHER CONDITIONS.
2. THE ROCK BERM SHALL BE INSPECTED WEEKLY OR AFTER EACH RAIN, AND THE STONE SHALL BE REPLACED WHEN THE STRUCTURE CEASES TO FUNCTION AS INTENDED, DUE TO SILT ACCUMULATION AMONG THE ROCKS, WASHOUT, CONSTRUCTION TRAFFIC DAMAGE, ETC.
3. WHEN SILT REACHES A DEPTH EQUAL TO ONE–THIRD THE HEIGHT OF THE BERM OR ONE FOOT, WHICHEVER IS LESS, THE SILT SHALL BE REMOVED AND DISPOSED OF IN AN APPROVED SITE AND A MANNER AS NOT TO CREATE A SILTATION PROBLEM.
4. DAILY INSPECTION SHALL BE MADE ON SEVERE SERVICE ROCK BERM; SILT SHALL BE REMOVED WHEN ACCUMULATION REACHES 6 INCHES.
5. WHEN THE SITE IS COMPLETELY STABILIZED, THE BERM AND ACCUMULATED SILT SHALL BE REMOVED AND DISPOSED OF IN AN APPROVED MANNER.

ROCK BERM

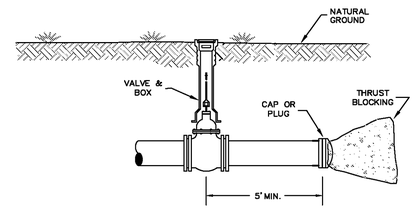

PIPE STUB DETAIL

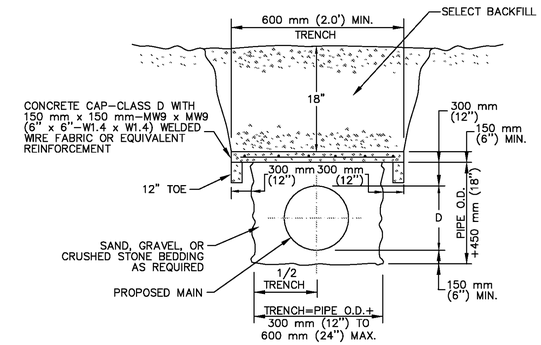

CONCRETE CAP DETAIL

N.T.S.

II. SIZING REQUIREMENTS: J15, J25

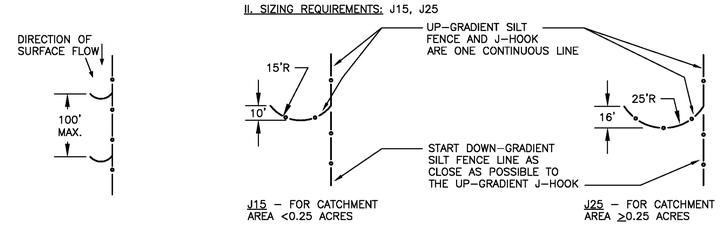

NOTE: SPACING DISTANCES WILL VARY, BUT ARE NOT TO EXCEED 100 FEET.

PLAN VIEW

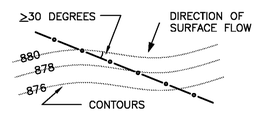

NOTE:
J–HOOKS SHALL BE USED WHEN THE SILT FENCE IS INSTALLED AT AN ANGLE OF 30 DEGREES OR GREATER FROM PARALLEL TO THE CONTOURS.

J-HOOK SILT FENCE DETAIL

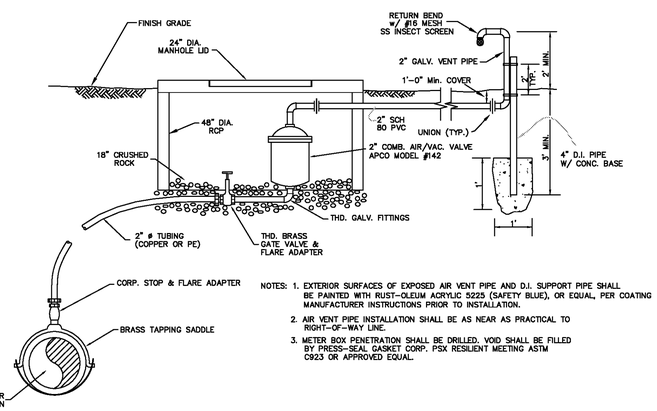

NOTES:
1. EXTERIOR SURFACES OF EXPOSED AIR VENT PIPE AND D.I. SUPPORT PIPE SHALL BE PAINTED WITH RUST–OLEUM ACRYLIC 5225 (SAFETY BLUE), OR EQUAL, PER COATING MANUFACTURER INSTRUCTIONS PRIOR TO INSTALLATION.
2. AIR VENT PIPE INSTALLATION SHALL BE AS NEAR AS PRACTICAL TO RIGHT–OF–WAY LINE.
3. METER BOX PENETRATION SHALL BE DRILLED. VOID SHALL BE FILLED BY PRESS–SEAL GASKET CORP. PSX RESILIENT MEETING ASTM C923 OR APPROVED EQUAL.

STANDARD AIR RELEASE VALVE

N.T.S.

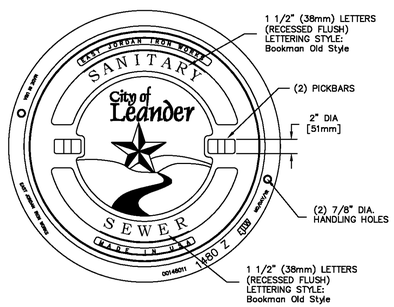

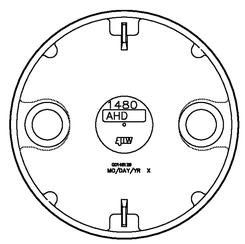

BOTTOM VIEW OF COVER

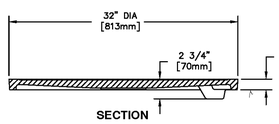

SECTION

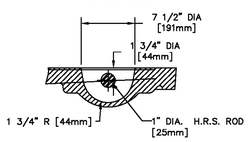

PICKBAR DETAIL

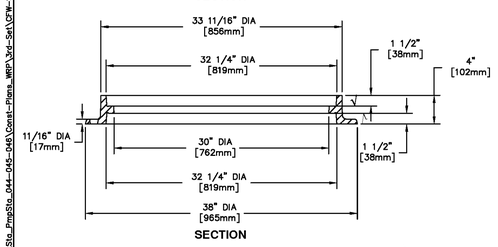

SECTION

MANHOLE ASSEMBLY	EST. WT. COVER: 200 LBS 91kg FRAME: 155 LBS 70kg UNIT: 355 LBS 161kg
EAST JORDAN IRON WORKS PRODUCT NO. 00148107 OR APPROVED EQUAL	OPEN AREA N/A
	MAT'L SPEC. COVER – GRAY IRON ASTM A48 CL35B FRAME – GRAY IRON ASTM A48 CL35B

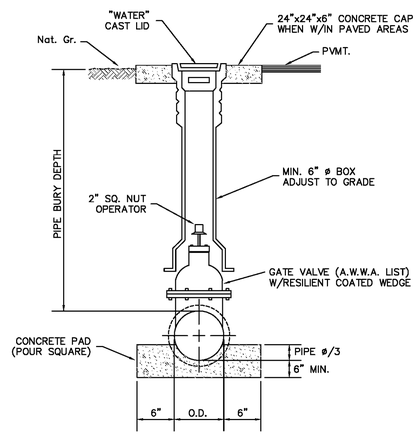

TYPICAL GATE VALVE

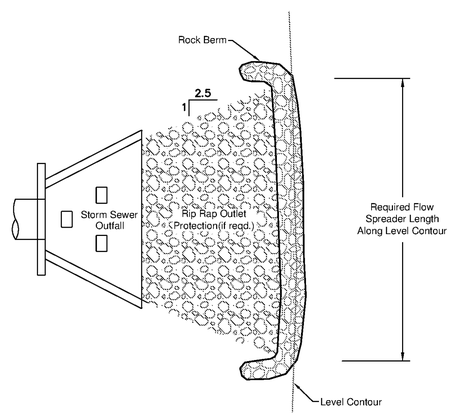

FLOW SPREADER DETAIL

N.T.S.

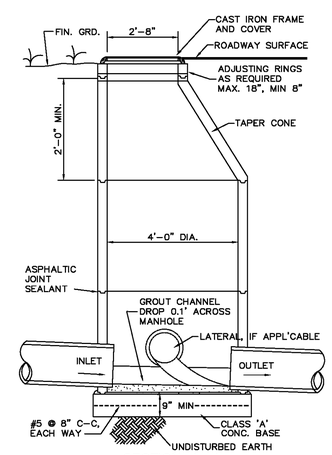

SECTION A–A

NOTE: USE 32" FRAME AND COVER.
MIN SIZES:
4' DIA.–8" TO 30"
5' DIA.–36" TO 42"
6' DIA.–48" TO 54"
7' DIA.–60" TO 66"
SIZE TO BE USED IS DEPENDENT ON SEWER ANGLES.

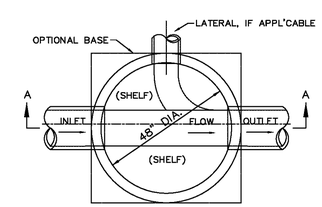

PLAN

PRECAST CONCRETE SANITARY & STORM SEWER MANHOLE

Jay Engineering Company, Inc.
P.O. Box 1220
Lakeway, Texas 78646-1220
Tel: (512) 259-3882 Fax: (512) 259-9016
TEXAS REGISTERED ENGINEERING FIRM F-4760

CRYSTAL FALLS WEST – SEC. 1
WRP, OFFSITE LIFT STA. & RECLAIMED WATER PUMP STA.

STANDARD DETAILS

THE LOOKOUT GROUP

SCALE: AS NOTED DWN: JJD DESIGN: SBK DATE: APRIL 2013
DWG. NO. AS NOTED JOB NO. 157-045-20

No.	date	Revisions	appr.

Sheet
D.1.0

C:\Projects-Lookout-Group\Crystal-Falls-West_Sec1_WRP_LftSta_PmpSta_044-045-046\Const-Plans_WRP\Xd-Set\CFW-Sec1_WRP_Sh-D.1.0_Details1.dwg

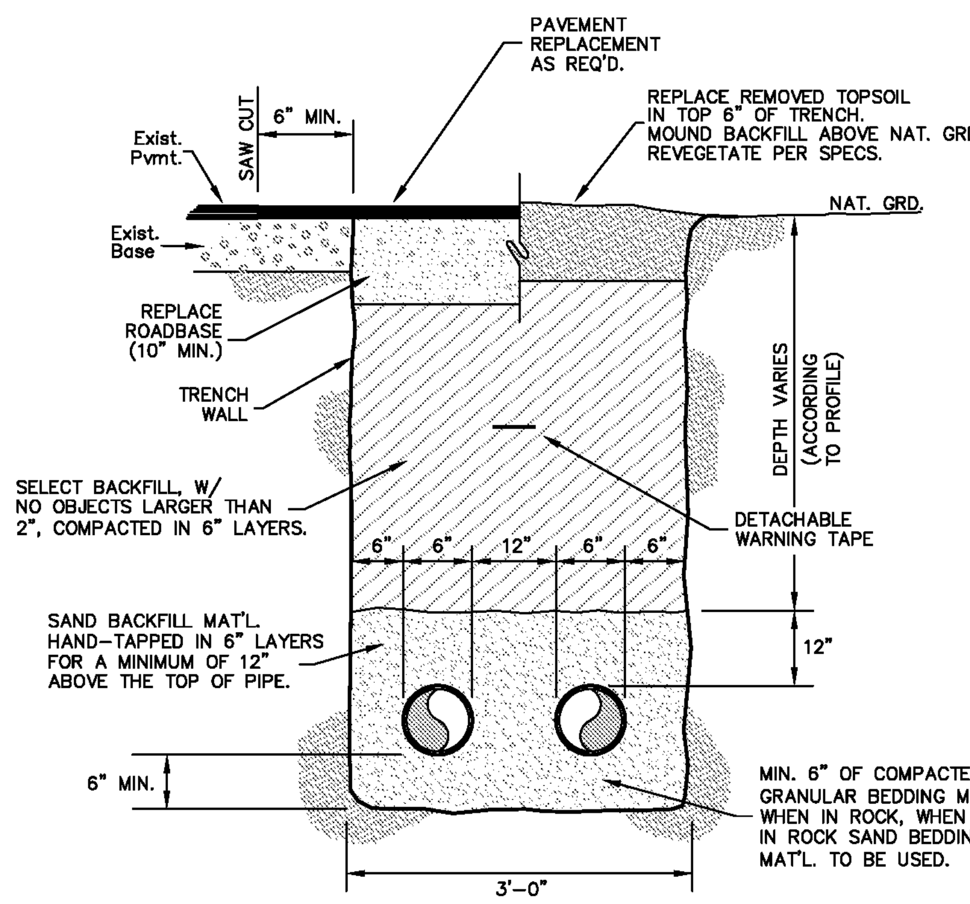

TYPICAL PIPE TRENCH AND EMBEDMENT

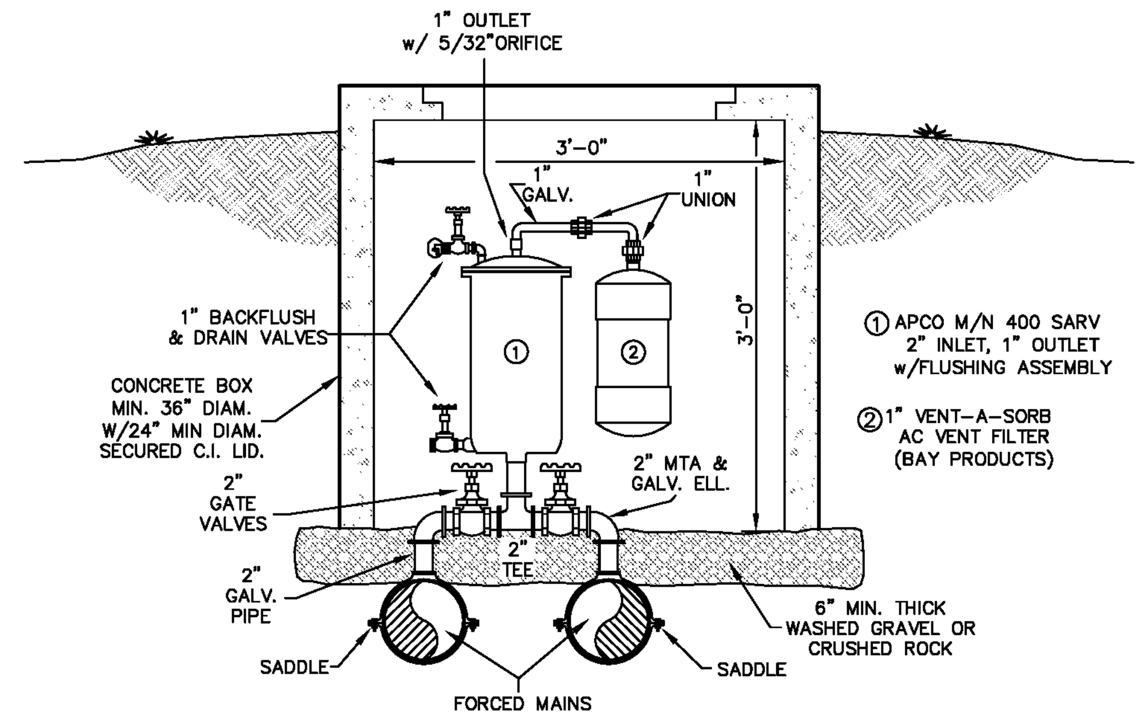

WASTEWATER AIR RELEASE DETAIL FOR DOUBLE FORCED MAINS

N.T.S.

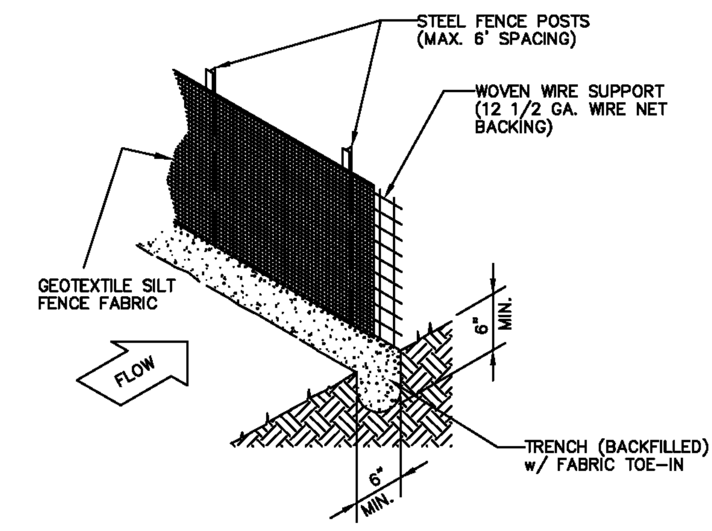

GENERAL NOTES:

1. STEEL POSTS WHICH SUPPORT THE SILT FENCE SHALL BE INSTALLED ON A SLIGHT ANGLE TOWARD THE ANTICIPATED RUNOFF SOURCE. POSTS MUST BE EMBEDDED A MINIMUM OF ONE FOOT.
2. THE TOE OF THE SILT FENCE SHALL BE TRENCHED IN WITH A SPADE OR MECHANICALLY TRENCHED, SO THAT THE DOWNSLOPE FACE OF THE TRENCH IS FLAT AND PERPENDICULAR TO THE LINE OF FLOW.
3. THE TRENCH MUST BE A MINIMUM OF 6 INCHES DEEP AND 6 INCHES WIDE TO ALLOW FOR THE SILT FENCE MATERIAL TO BE LAID IN THE GROUND AND BACKFILLED WITH COMPACTED MATERIAL.
4. SILT FENCE SHOULD BE SECURELY FASTENED TO EACH STEEL POST OR TO WOVEN WIRE, WHICH IS IN TURN ATTACHED TO THE STEEL FENCE POSTS.
5. INSPECTION SHALL BE MADE WEEKLY OR AFTER EACH RAINFALL EVENT, AND REPAIR OR REPLACEMENT SHALL BE MADE PROMPTLY AS NEEDED.
6. SILT FENCE SHALL BE REMOVED WHEN THE SITE IS COMPLETELY STABILIZED, SO AS NOT TO BLOCK OR IMPEDE STORM FLOW OR DRAINAGE. ACCUMULATED SILT SHALL BE DISPOSED OF AS IN NO. 7 BELOW.
7. ACCUMULATED SILT SHALL BE REMOVED WHEN IT REACHES A DEPTH OF 6 INCHES. THE SILT SHALL BE DISPOSED OF IN AN APPROVED SITE AND IN SUCH A MANNER AS TO NOT CONTRIBUTE TO ADDITIONAL SILTATION.

STANDARD SILT FENCE

MATERIALS LIST:

1. FORCED MAIN 6" TYP.
2. 3" PVC SCH 40 WYE
3. 3" PVC SCH 40 90° BEND
4. STANDARD CITY OF AUSTIN WATER TIGHT RING & 32" COVER
5. PRECAST SECTION PER ASTM C-478
6. 3" RESILIENT WEDGE GATE VALVE

7. 2 1/2" BRASS SCREW CAP

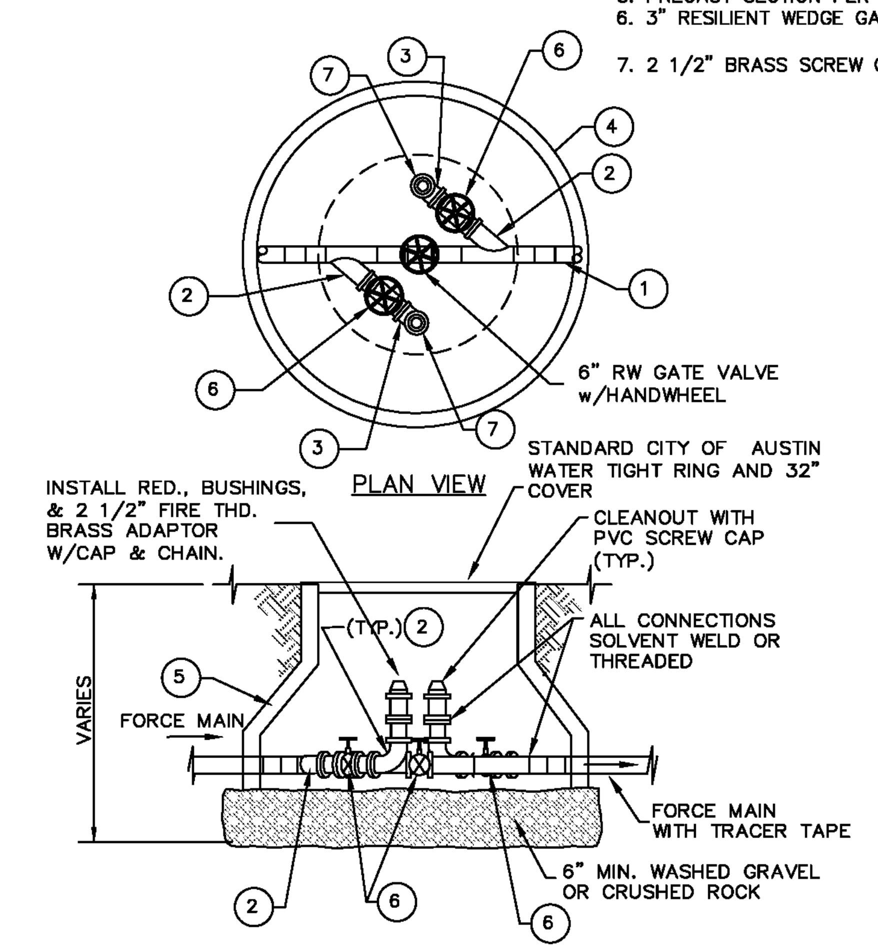

FORCED MAIN FLUSHING & CLEANOUT ASSEMBLY
(Main Line)

N.T.S.

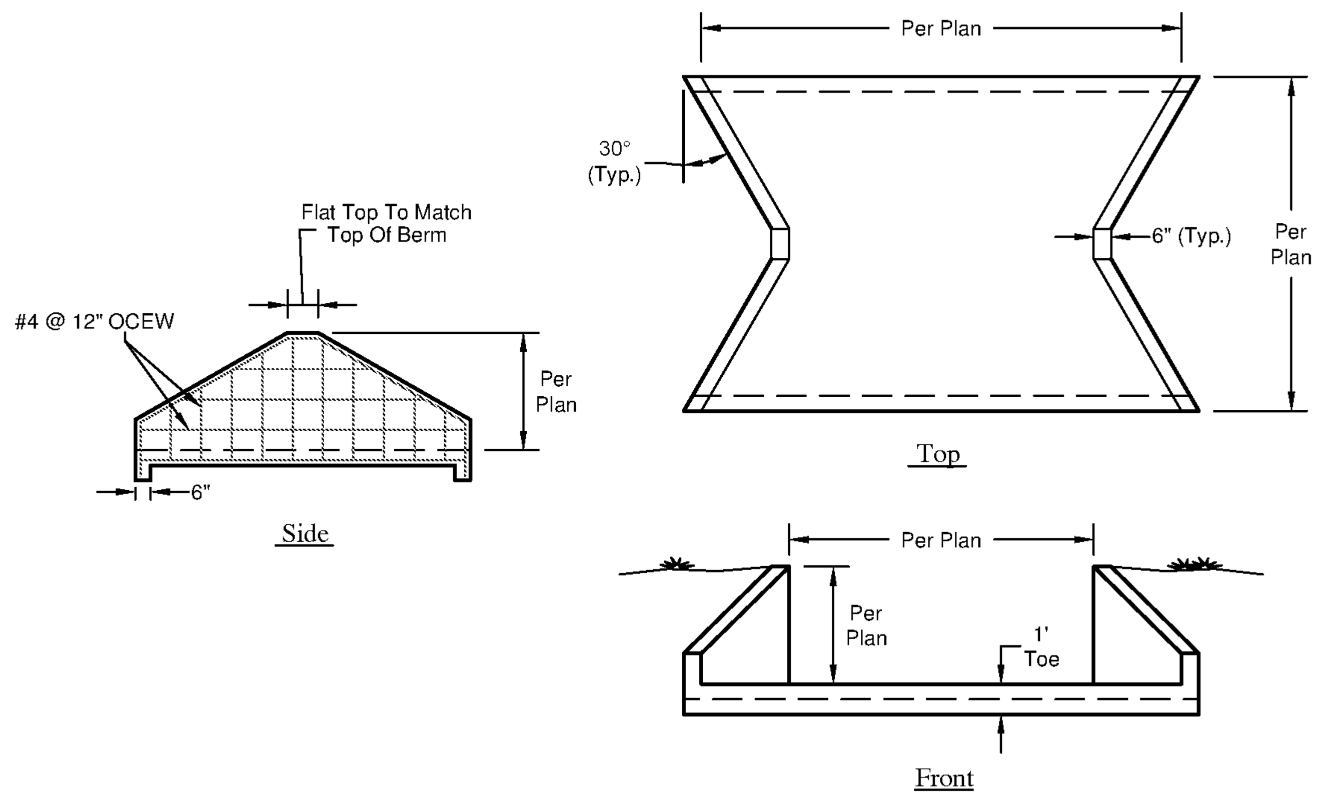

Spillway Detail
n.t.s.

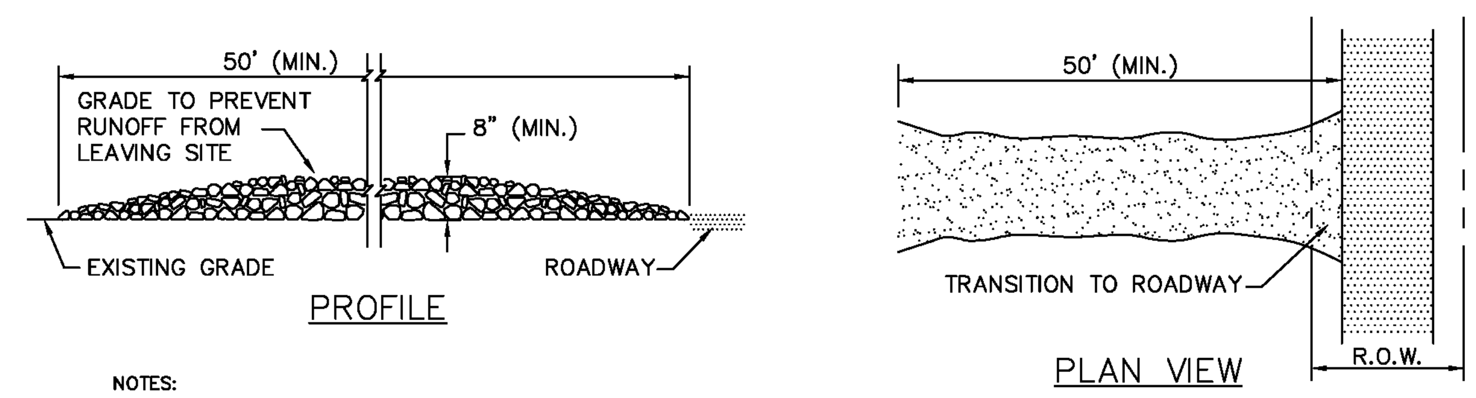

NOTES:

1. STONE SIZE – 3 TO 5 INCH OPEN GRADED ROCK.
2. LENGTH – AS EFFECTIVE, BUT NO LESS THAN 50 FEET.
3. THICKNESS – NOT LESS THAN 8 INCHES.
4. WIDTH – NOT LESS THAN FULL WIDTH OF ALL POINTS OF INGRESS OR EGRESS.
5. WASHING – WHEN NECESSARY, WHEELS SHALL BE CLEANED TO REMOVE SEDIMENT PRIOR TO ENTRANCE ONTO PUBLIC ROADWAY. WHEN WASHING IS REQUIRED, IT SHALL BE DONE ON AN AREA STABILIZED WITH CRUSHED STONE WHICH DRAINS INTO AN APPROVED TRAP OR SEDIMENT BASIN. ALL SEDIMENT SHALL BE PREVENTED FROM ENTERING ANY STORM DRAIN, DITCH OR WATERCOURSE USING APPROVED METHODS.
6. MAINTENANCE – THE ENTRANCE SHALL BE MAINTAINED IN A CONDITION WHICH WILL PREVENT TRACKING OR FLOWING OF SEDIMENT INTO PUBLIC ROADWAYS. THIS MAY REQUIRE PERIODIC TOP DRESSING WITH ADDITIONAL STONE AS CONDITIONS DEMAND, AND REPAIR AND/OR CLEAN- OUT OF ANY MEASURES USED TO TRAP SEDIMENT. ALL SEDIMENT SPILLED, DROPPED, WASHED OR TRACKED ONTO PUBLIC ROADWAY MUST BE REMOVED IMMEDIATELY.
7. DRAINAGE – ENTRANCE MUST BE PROPERLY GRADED OR INCORPORATE A DRAIN SWALE TO PREVENT RUNOFF FROM LEAVING THE CONSTRUCTION SITE.

STABILIZED CONSTRUCTION ENTRANCE

N.T.S.

THRUST BLOCKING SCHEDULE

ASSUMPTIONS: LINE PRESSURE - 165 psi, ALLOWABLE BEARING - 4000 psf, SAFETY FACTOR - 3

			11 1/4° BEND			22 1/2° BEND			45° BEND			90° BEND			TEE & PLUG		
PIPE DIAMETER	PIPE AREA Sq. In.	X	THRUST Lbs.	AREA Sq. Ft.	A Ft.	THRUST Lbs.	AREA Sq. Ft.	B Ft.	THRUST Lbs.	AREA Sq. Ft.	C Ft.	THRUST Lbs.	AREA Sq. Ft.	D Ft.	THRUST Lbs.	AREA Sq. Ft.	E Ft.
4" - 12"	113	1.5'	3,666	2.7	1.6	7,296	5.5	2.3	14,312	10.7	3.3	26,445	19.8	4.4	18,661	14	3.7
16"	201	2'	6,517	4.9	2.2	12,971	9.7	3.1	25,443	19.1	4.4	47,013	35.3	5.9	33,175	24.9	5.0
24"	452	3'	14,663	11	3.3	29,184	21.9	4.7	57,247	42.9	6.5	105,779	79.3	8.9	74,645	56	7.5

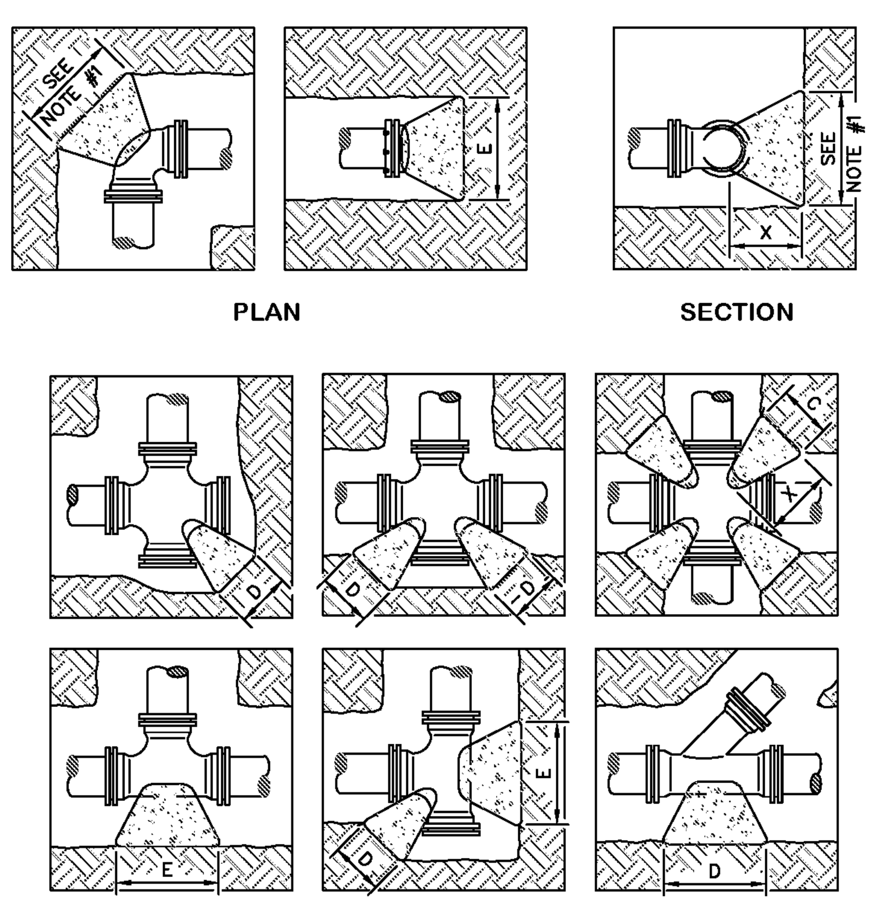

NOTES:

1. USE A, B, C, D or E AS APPROPRIATE. REFER TO SCHEDULE.
2. ALL CONCRETE THRUST BLOCKS SHALL BEAR AGAINST UNDISTURBED TRENCH WALLS. DISTANCE (X) FROM PIPE FITTING TO TRENCH WALL SHALL BE AS SHOWN IN THE SCHEDULE OR A MIN. OF 12" AT THE THRUST BLOCK.
3. VERTICAL DIMENSION OF BEARING AREA AGAINST TRENCH WALL OF THRUST BLOCK SHALL BE EQUAL TO HORIZONTAL DIMENSION OF A, B, C, D, OR E AS APPROPRIATE. REFER TO SCHEDULE AND SECTION DRAWING.
4. ALL JOINTS SHALL BE TEMPORARILY JACKED WHEN POURING THRUST BLOCKS. ALL JOINTS OF FITTINGS SHALL BE KEPT FREE OF ANY CONCRETE.
5. ALL CONCRETE THRUST BLOCKS SHALL CONSIST OF A MIXTURE OF 1:2:6 OF CEMENT TO WASHED SAND TO GRAVEL & SHALL BE CURED FOR A MIN. OF 24 HRS.
6. CONCRETE THRUST BLOCKS SHALL APPLY TO ALL PIPE FITTINGS.

THRUST BLOCKING DETAIL

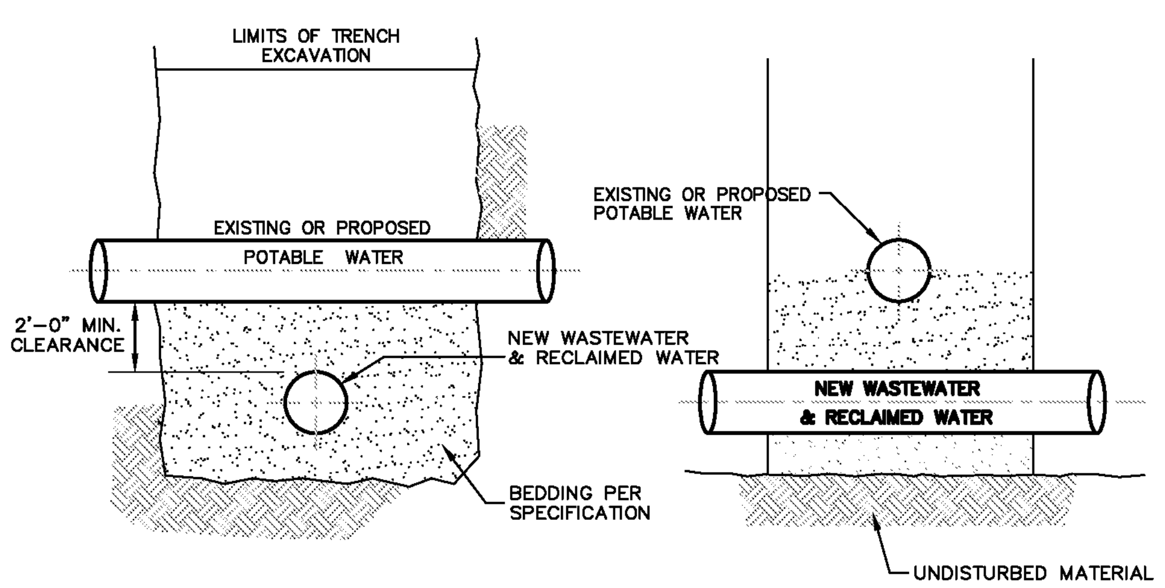

NOTES:

1. MINIMUM VERTICAL SEPARATION 2'-0"
2. DETAIL NOT APPLICABLE TO PRIVATE SERVICE CONNECTIONS.
3. SUPPORT AND PROTECT EXISTING WATER LINE, IF APPLICABLE.
4. INSTALL STEEL CASING WHERE INDICATED IN THE DRAWINGS.

WATER LINE CROSSING

N.T.S.

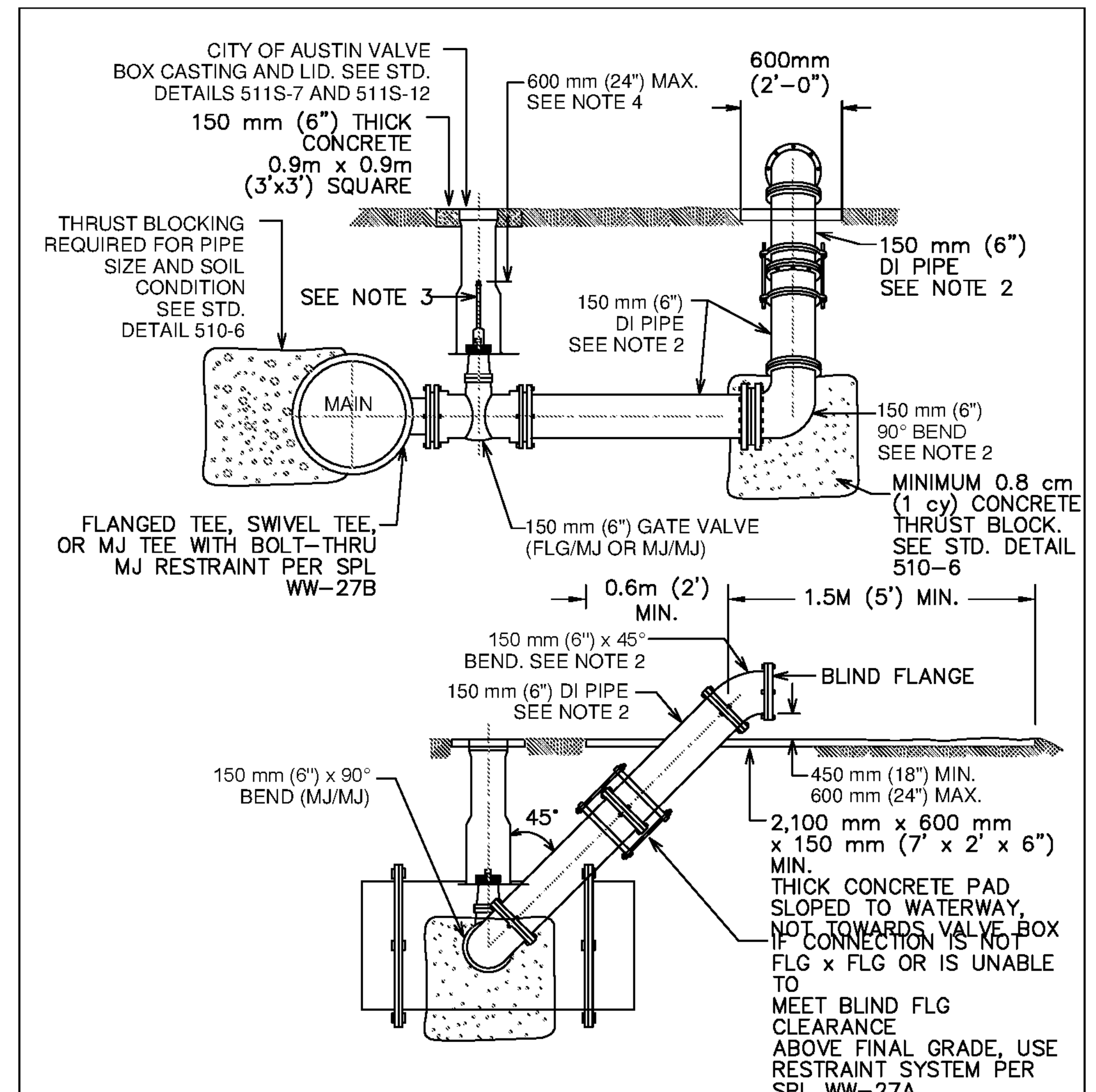

NOTES:

1. WRAP 8 MIL POLY FILM WRAP ON ALL BURIED PIPE AND FITTINGS.
2. PROVIDE RESTRAINED JOINTS FOR ALL JOINTS PER SPL WW-27A. FLG X FLG JOINTS ARE ACCEPTABLE FROM 90° BEND TO BLIND FLANGE.
3. WELD SOCKET 64mm x 51mm (2-1/2" x 2") TO 25mm (1") SCH. 40 ROUND STEM EXTENSION, FITTED ON OPERATING NUT. USE SCH. 80 ROUND STEM EXTENSION FOR LENGTHS OVER 3m (10').
4. VALVE EXTENSIONS ARE REQUIRED ON ALL VALVES THAT EXCEED .9m (3') DEEP FROM FINISHED GRADE TO VALVE NUT. VALVE EXTENSIONS SHALL BE PLACED SUCH THAT THE NUT IS BETWEEN 450mm AND 600mm (18" AND 24") FROM FINISHED GRADE.
5. ABOVE-GROUND EXPOSED PIPE SURFACES SHALL BE PAINTED PER SPL WW-3C, POTABLE WATER PIPE SHALL BE SAFETY BLUE.

CITY OF AUSTIN AUSTIN WATER UTILITY	DRAIN VALVE INSTALLATION	
RECORD COPY SIGNED BY KATHI L FLOWERS 08/31/2011	THE ARCHITECT/ENGINEER ASSUMES RESPONSIBILITY FOR APPROPRIATE USE OF THIS STANDARD.	STANDARD NO. 511S–9A

STATE OF TEXAS
FRANK T. PHELAN
93874
LICENSED PROFESSIONAL ENGINEER
6/26/13

JEO™
Jay Engineering Company, Inc.
P.O. Box 1220
Leander, Texas 78646-1220
Tel. (512) 259-3882 Fax. (512) 259-8016

CRYSTAL FALLS WEST - SEC.1
WRP, OFFSITE LIFT STA. & RECLAIMED WATER PUMP STA.

STANDARD DETAILS

no.	date	Revisions	appv.

THE LOOKOUT GROUP

SCALE: AS NOTED | DWN: JJD | DESIGN: FAJ | DATE: JUNE 2013
DWG. NO. AS NOTED | JOB NO. 193-030-20

Sheet
D.2.0

INSTALL 4" DIAM. ALUMINUM OR STEEL "NO DUMPING DRAIN TO CREEK" MARKER(MODEL #MD16513/14), SET 1-2 INCHES FROM THE VERTICAL FACE, FACING UPWARDS AT MIDPOINT OF INLET.

① May be changed as directed by the Engineer.
② Is equals the maximum inside diameter of any pipe entering the wall shown or the opposite wall.
③ Q equals the maximum inside diameter of any pipe entering the inlet.

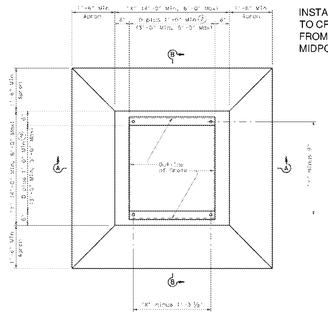

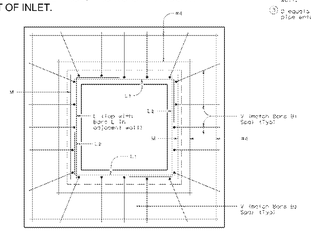

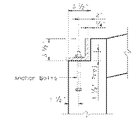

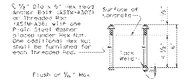

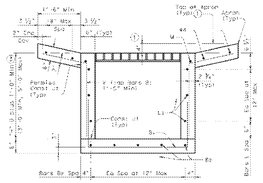

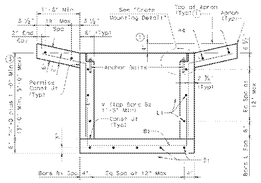

SHEET 1 OF 2

Texas Department of Transportation
Bridge Division

HORIZONTAL INLET
TYPE H WITH GRATE
(MAX 48" DIA PIPES)

IL-H-G

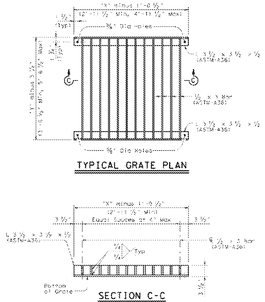

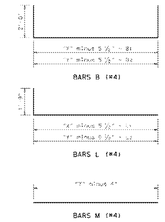

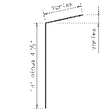

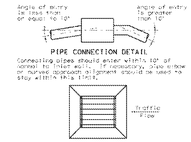

GENERAL NOTES:

When approved, precast inlets with equivalent structural capability may be furnished. Shop engineering calculations and drawings shall be submitted for approval prior to construction.

Shop drawings will not be required.

Concrete shall be Class "A".

In areas of conflict between reinforcing steel, bolsterhooks, dowels, anchor bolts or other reinforcing steel, the reinforcement shall be bent or adjusted to clear as directed by the Engineer.

Anchor bolts are 3/4" dia ASTM A307 Grade A bolts for ASE threaded rods with one hex head and two hex nut washers with one hex head bolt and one plain steel washer.

Structural Steel for grates shall conform to the requirements of ASTM Designation A-36 or ASTM Designation A-283 Grade D.

All reinforcing steel shall be Grade 60 unless otherwise noted.

All steel components except reinforcing, shall be galvanized after fabrication.

Prior to galvanizing, all welding and construction shall be completed in accordance with the specifications.

All concrete shall be Class "A" f'c = 3,000 psi.

SHEET 2 OF 2

Texas Department of Transportation
Bridge Division

HORIZONTAL INLET
TYPE H WITH GRATE
(MAX 48" DIA PIPES)

IL-H-G

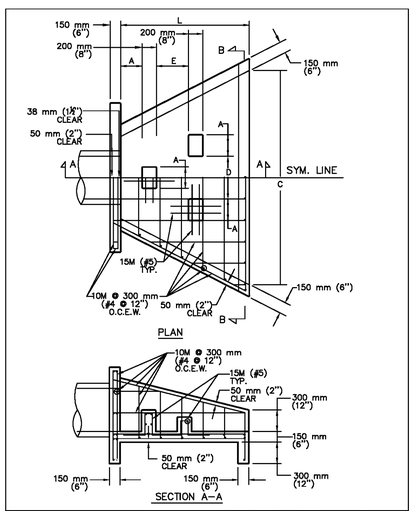

CITY OF AUSTIN
DEPARTMENT OF WATERSHED PROTECTION AND DEVELOPMENT REVIEW

RECORD COPY SIGNED BY BILL GARDNER 08/20/07 ADOPTED

STANDARD HEADWALL AND ENERGY DISSIPATORS

THE ARCHITECT/ENGINEER ASSUMES RESPONSIBILITY FOR APPROPRIATE USE OF THIS STANDARD.

STANDARD NO. 508S-13 1 OF 2

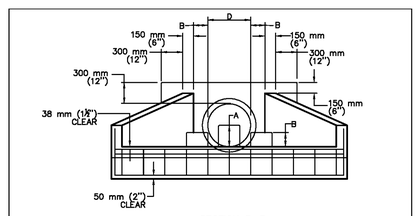

NOTES:
1. ALL CONCRETE SHALL BE TYPE "C" AS PER SPEC. 403S, CONCRETE FOR STURCTURES.
2. CHAMFER ALL EXTERNAL VISIBLE CORNERS.
3. DISSIPATOR BLOCKS REQUIRED ON DISCHARGE HEADWALLS ONLY.

D	457 mm (18")	533 mm (21")	610 mm (24")	685 mm (27")	765 mm (30")	838 mm (33")	914 mm (36")	1.067 m (42")	1.219 m (48")	1.372 m (54")	1.524 m (60")
A	225 mm (9")	250 mm (10")	300 mm (12")	350 mm (14")	375 mm (15")	400 mm (16")	450 mm (18")	525 mm (21")	600 mm (24")	675 mm (27")	750 mm (30")
B	150 mm (6")	175 mm (7")	200 mm (8")	225 mm (9")	250 mm (10")	275 mm (11")	300 mm (12")	350 mm (14")	400 mm (16")	450 mm (18")	500 mm (20")
C	2.29 m (90")	2.67 m (105")	3.05 m (120")	3.43 m (135")	3.81 m (150")	4.19 m (165")	4.57 m (180")	5.33 m (210")	6.10 m (240")	6.86 m (270")	7.62 m (300")
L	1.37 m (54")	1.60 m (63")	1.83 m (72")	2.05 m (81")	2.29 m (90")	2.51 m (99")	2.74 m (108")	3.20 m (126")	3.66 m (144")	4.11 m (162")	4.57 m (180")
E	300 mm (12")	350 mm (14")	400 mm (16")	450 mm (18")	500 mm (20")	550 mm (22")	600 mm (24")	700 mm (28")	800m (32")	900 mm (36")	1000 mm (40")

DIMENSIONS IN MILLIMETERS, METERS AND (INCHES).

DISCHARGE VELOCITIES GREATER THAN 3 METERS/SECOND (10 fps) REQUIRE ROCK OUTLET PROTECTION.

CITY OF AUSTIN
DEPARTMENT OF WATERSHED PROTECTION AND DEVELOPMENT REVIEW

RECORD COPY SIGNED BY BILL GARDNER 08/20/07 ADOPTED

STANDARD HEADWALL AND ENERGY DISSIPATORS

THE ARCHITECT/ENGINEER ASSUMES RESPONSIBILITY FOR APPROPRIATE USE OF THIS STANDARD.

STANDARD NO. 508S-13 2 OF 2

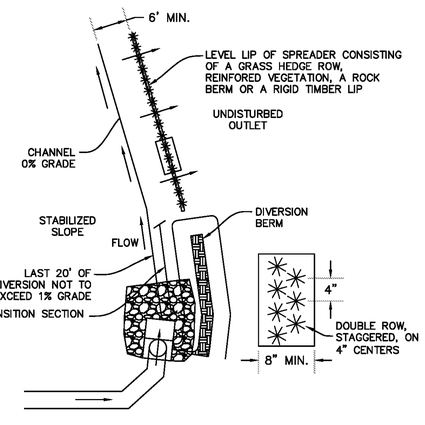

LEVEL SPREADER

MULTIPLE LEVEL LIP OPTONS
ZERO GRADE ACROSS A SLOPE WITH

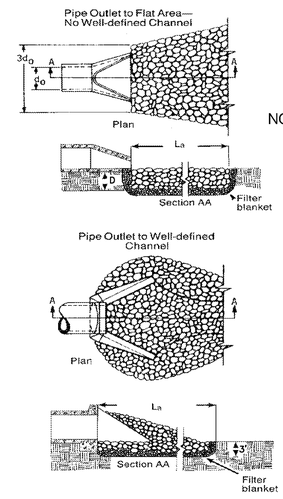

NOTES:
1. L_a Is The Length Of The RipRap Apron.
2. In A Well-Defined Channel Extend The Apron Up The Channel Banks To An Elevation Of 6" Above The Outlet Pipe.
3. A Filter Blanket Or Filter Fabric Should Be Installed Between The RipRap And Soil Foundation.
4. D=1.5 Times The Minimum Stone Diameter.

RIPRAP OUTLET DESIGN

N.T.S.

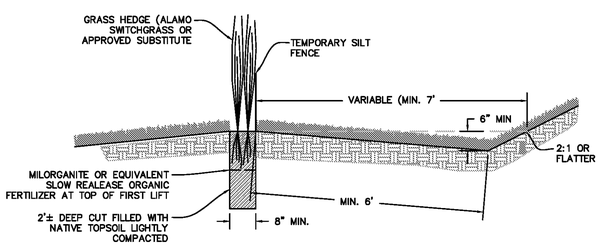

LEVEL SPREADER WITH GRASS HEDGE ROW

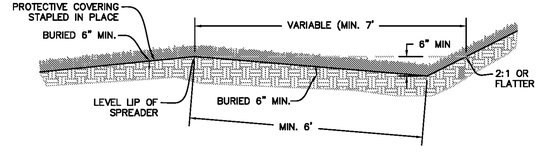

LEVEL SPREADER WITH REINFORCED VEGETATED LIP

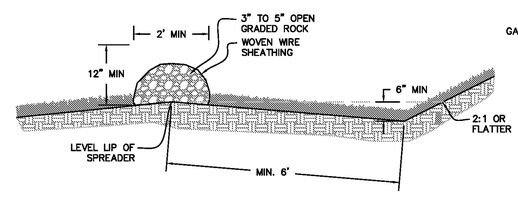

LEVEL SPREADER WITH ROCK BERM LIP

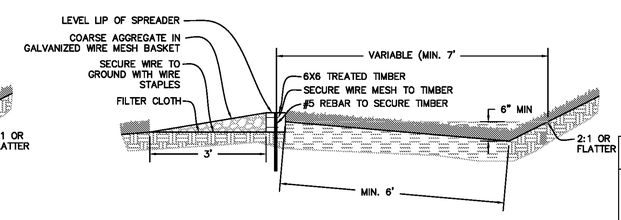

LEVEL SPREADER WITH RIGID TIMBER LIP

LEVEL SPREADER LIP OPTIONS

N.T.S.

FRANK T. PHELAN 93874 PROFESSIONAL ENGINEER 9/16/13

Jay Engineering Company, Inc.
P.O. Box 1220
Leander, Texas 78646-1220
Tel: (512) 259-3882 Fax: (512) 259-8016
Texas Registered Engineering Firm F-4780

CRYSTAL FALLS WEST - SEC. 1
WRP, OFFSITE LIFT STA. & RECLAIMED WATER PUMP STA.

STANDARD DETAILS

THE LOOKOUT GROUP

SCALE: AS NOTED DWN: JJD DESIGN: FMJ DATE: APRIL 2013
DWG. NO. AS NOTED JOB NO. 157-045-20

no.	date	Revisions	appv.

Sheet
D.3.0

C:\Projects-Lookout-Group\Crystal-Falls-West_Sec1_WRP_LiftSta_PmpSta_044-045-046\Const-Plans_WRP\3rd-Set\CFW-Sec1_WRP_Sh-D.3.0_Details3.dwg

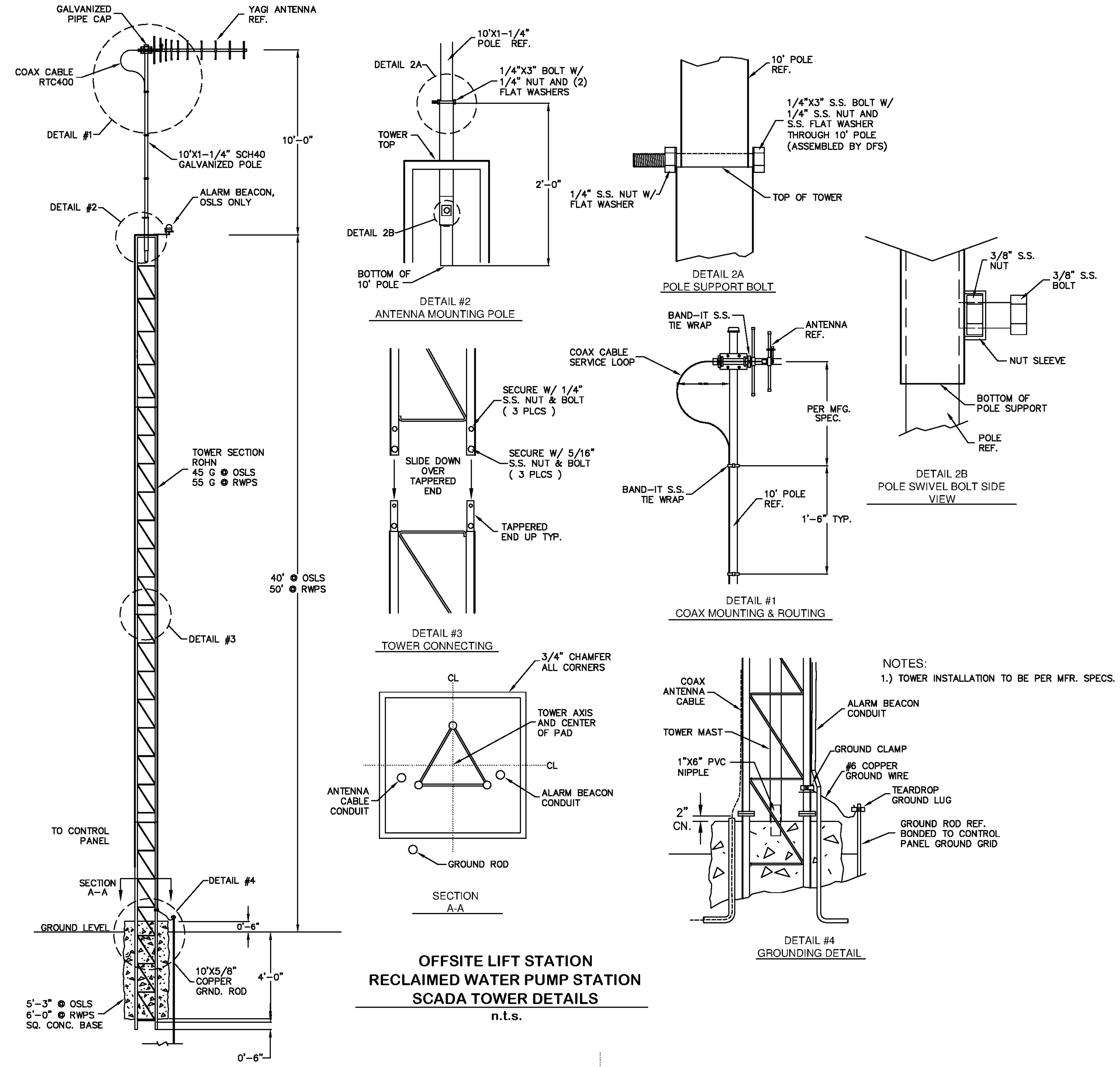

OFFSITE LIFT STATION
RECLAIMED WATER PUMP STATION
SCADA TOWER DETAILS
n.t.s.

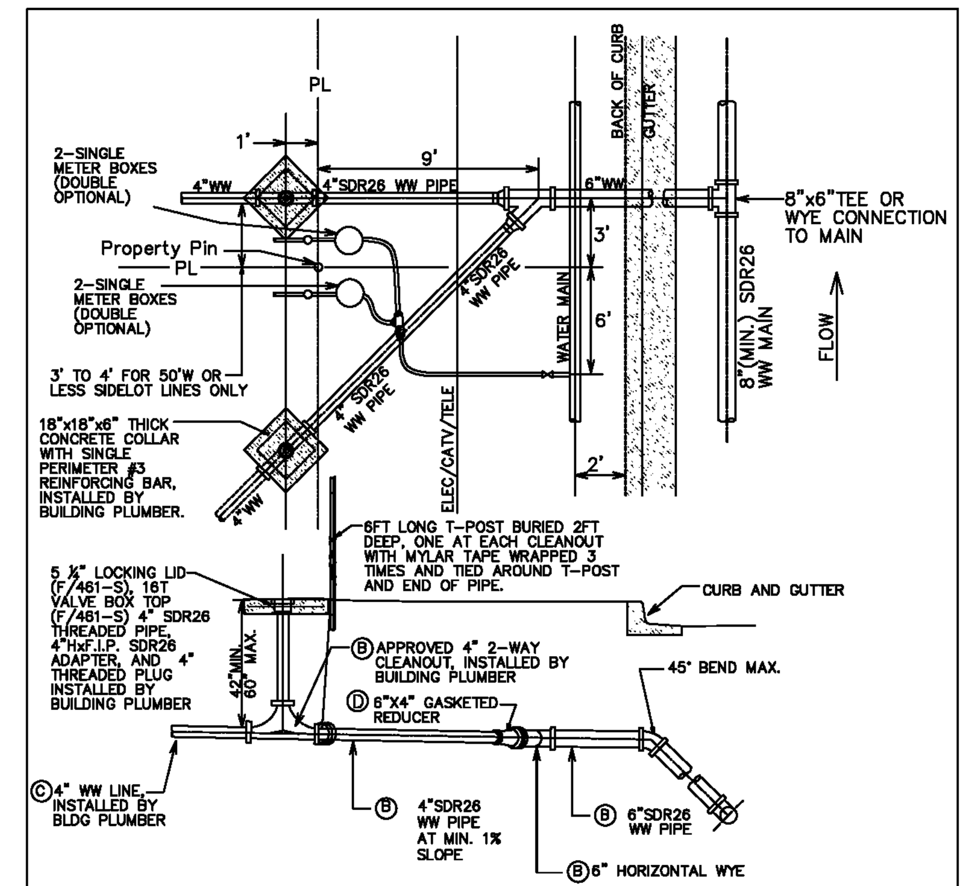

NOTES:

Ⓐ THESE DIMENSIONS MAY BE INCREASED BY WIDTH OF WALK OR INLET IF LOCATED AT CURB.

Ⓑ TO BE INSTALLED AND INSPECTED DURING SUBDIVISION CONSTRUCTION. 2-WAY CLEANOUTS INSTALLED BY BLDG. PLUMBER. UTILITY CONTRACTOR INSTALLS SERVICE STUB WITH PLUG OR CAP.

Ⓒ BUILDING INSPECTION DEPARTMENT SHALL INSPECT CUSTOMER'S WASTEWATER LINE, EXCEPT CONNECTION AT WYE, AND WATER LINE TO CUSTOMER'S SHUT-OFF-VALVE.

Ⓓ TAPS INSPECTION OFFICE INSPECTS CONNECTIONS OF CUSTOMER'S WATER AND WASTEWATER LINES TO CITY SYSTEMS.

THE SEAL APPEARING ON THIS DOCUMENT WAS AUTHORIZED BY WAYNE S. WATTS, P.E. # 86134 ON MARCH 19, 2003. ALTERATION OF A SEALED DOCUMENT WITHOUT PROPER NOTIFICATION TO THE RESPONSIBLE ENGINEER IS AN OFFENSE UNDER THE TEXAS ENGINEERING PRACTICE ACT.

City Of Leander, Texas
DETAIL #520S-3
1 OF 2
NEW RESIDENTIAL DOUBLE WATER / WASTEWATER SERVICE DETAIL

NOTES:

1. DURING SUBDIVISION CONSTRUCTION UTILITY CONTRACTOR INSTALLS WASTEWATER CONNECTION TO MAIN, 6" STUB WITH HORIZONTAL WYE FOR DOUBLE SERVICES, 6" SERVICE BRANCH WITH 2-WAY-CLEANOUT(S), AND, PLUG(S) FOR 2-WAY-CLEANOUT(S) AT PROPERTY LINE END. ALL WASTEWATER PIPING SHALL HAVE ELASTOMERIC GASKET TYPE JOINTS AND SHALL SLOPE DOWNWARD TO MAIN 1% (1/8" PER FOOT) MINIMUM TO 45° MAXIMUM. DEPTH OF SERVICE STUB AT PROPERTY LINE WILL BE SHOWN ON PLANS BY ENGINEER IF GREATER THAN 4', OTHERWISE THE INSTALLED DEPTH WILL TYPICALLY BE 4' TO 6'. IF WASTEWATER SERVICE LINE TO MAIN REQUIRES DEFLECTION EXCEEDING 45°, REFER TO DETAIL 520-6. UTILITY CONTRACTOR ALSO INSTALLS WATER CONNECTION TO MAIN WATER PIPE, FITTINGS AND VALVES INCLUDING STOP VALVE-REFER TO DETAILS 520-9 AND 520-11 FOR LOCATION OF STOP VALVES. ALL INSTALLATIONS SHALL BE MADE IN ACCORDANCE WITH INFORMATION SHOWN ON APPLICABLE STANDARD DRAWINGS AND WILL BE INSPECTED BY CITY OF LEANDER CONSTRUCTION INSPECTION PERSONNEL.
2. CUSTOMER REMOVES PLUG FROM 2-WAY-CLEANOUT AT PROPERY LINE, INSTALLS 6" X 4" ELASTOMERIC GASKETED BELL REDUCER (COA SPL WW-227-B), AND RISER FOR CLEANOUT(S). A BUSHING WILL NOT BE ALLOWED. AS AN ALTERNATE, CUSTOMER MAY INSTALL MINIMUM 18" LENGTH OF 6" PIPE, INSTALL 4" WASTEWATER LINES, EXTEND 4" PIPE 6" MINIMUM INTO 6" PIPE AND JOINT WITH FLEXIBLE ADAPTER (COA SPL WW-354) AND CAST IN PLACE CONCRETE SUPPORT BLOCK UNDER THE FLEXIBLE ADAPTER. BLOCK SHALL HAVE MINIMUM DIMENSIONS OF 6" THICK AND 18" WIDE AND EXTEND A MINIMUM OF 6" BEYOND EITHER END OF THE ADAPTER. IF WASTEWATER WILL NOT SATISFACTORILY FLOW BY GRAVITY TO SEWER MAIN ADJACENT TO PROPERTY, PUMP EQUIPMENT MUST BE PROVIDED BY THE CUSTOMER AS PART OF CUSTOMER'S WASTEWATER SYSTEM. CUSTOMER ALSO INSTALLS WATER LINES INCLUDING FITTINGS AND VALVES ON BOTH SIDES OF METER, AND INSTALLS METER BOXES AND COVERS. ALL IN ACCORDANCE WITH INFORMATION ON APPLICABLE STANDARD DRAWING. A VENTED SPACER MAY BE USED TO ASSURE PROPER SPACING AND ALIGNMENT OF METER FITTINGS.
3. IF EXISTING SERVICE IS NOT PVC, THE CUSTOMER SHALL INSTALL A FLEXIBLE ADAPTER (COA SPL WW-354) AND CAST IN PLACE CONCRETE SUPPORT BLOCK UNDER THE ADAPTER TO TRANSITION TO PVC. THE SUPPORT BLOCK SHALL HAVE MINIMUM DIMENSIONS OF 6" THICK AND 18" WIDE AND EXTEND A MINIMUM OF 6" BEYOND EITHER END OF THE ADAPTER.
4. CUSTOMER IS RESPONSIBLE FOR METER BOX AND PIPING SYSTEM UNTIL METER IS INSTALLED AND WASTEWATER IS CONNECTED. ANY MISSING OR DAMAGED PARTS SHALL BE REINSTALLED BY CUSTOMER WHO SHALL GUARANTEE, FOR A PERIOD OF TWO (2) YEAR FROM DATE OF ACCEPTANCE, THAT CONNECTIONS TO CITY SYSTEMS ARE FREE FROM DEFECTS IN WORKMANSHIP OR MATERIAL. CUSTOMER ALSO HAS THE RESPONSIBILITY TO ASSURE THAT ALL VALVES AND STOPS, METER BOX AND 2-WAY-CLEANOUTS REMAIN CLEAR OF SIDEWALKS AND OTHER OBSTRUCTIONS.
5. CITY OF LEANDER ACTIVITY IS LIMITED TO INSTALLATION OF THE WATER METER AND INSPECTION OF CONNECTIONS TO THE CITY'S WATER AND WASTEWATER SYSTEMS. FOR MAINTENANCE PURPOSES, THE CITY'S RESPONSIBILITY ENDS AT THE CUSTOMER'S WATER CUT-OFF VALVE AND AT THE CUSTOMER'S WASTEWATER CONNECTION TO THE 2-WAY-CLEANOUT.
6. PIPING AND TUBING IN STREET RIGHT-OF-WAY AND IN EASEMENT AREA SHALL BE BEDDED IN GRANULAR MATERIALS AS REQUIRED BY CITY OF AUSTIN STANDARD SPECIFICATION SECTION 510.3 (14); MATERIALS SHALL BE AS SPECIFIED IN 510.2 (2)(A) AND (3)(B); BACKFILL ABOVE THE GRANULAR BEDDING SHALL BE AS REQUIRED BY SECTION 510.3 (25). SERVICE LINES IN THESE AREAS SHALL HAVE A MINIMUM COVER BELOW FINAL STREET GRADE OF 42". ANY EXCEPTION MUST BE SPECIFICALLY APPROVED BY THE ENGINEER.
7. NO METER BOX OR CLEAN OUT SHALL BE SET IN SIDEWALK OR DRIVEWAY AREA WITHOUT WRITTEN APPROVAL FROM THE CITY ENGINEERING DEPT.

THE SEAL APPEARING ON THIS DOCUMENT WAS AUTHORIZED BY WAYNE S. WATTS, P.E. # 86134 ON MARCH 19, 2003. ALTERATION OF A SEALED DOCUMENT WITHOUT PROPER NOTIFICATION TO THE RESPONSIBLE ENGINEER IS AN OFFENSE UNDER THE TEXAS ENGINEERING PRACTICE ACT.

City Of Leander, Texas
DETAIL #520S-3
2 OF 2
NEW RESIDENTIAL DOUBLE WATER / WASTEWATER SERVICE DETAIL

1.3.2 Diversion Dikes

A temporary diversion dike is a barrier created by the placement of an earthen embankment to reroute the flow of runoff to an erosion control device or away from an open, easily erodible area. A diversion dike intercepts runoff from small upland areas and diverts it away from exposed slopes to a stabilized outlet, such as a rock berm, sandbag berm, or stone outlet structure. These controls can be used on the perimeter of the site to prevent runoff from entering the construction area. Dikes are generally used for the duration of construction to intercept and reroute runoff from disturbed areas to prevent excessive erosion until permanent drainage features are installed and/or slopes are stabilized. A schematic of a diversion dike is shown in Figure 1-8.

Materials:

(1) Stone stabilization (required for velocities in excess of 6 fps) should consist of riprap placed in a layer at least 3 inches thick and should extend a minimum height of 3 inches above the design water surface up the existing slope and the upstream face of the dike. Stabilization riprap should conform to the following specifications

Channel Grade	Riprap Stabilization
0.5 – 1%	4 inch rock
1.1 – 2%	6 inch rock
2.1 – 4 %	8 inch rock
4.1 – 5%	8 – 12 inch riprap

(2) Geotextile fabric should be a non-woven polypropylene fabric designed specifically for use as a soil filtration media with an approximate weight of 6 oz./yd^2, a Mullen burst rating of 140 psi, and having an equivalent opening size (EOS) greater than a #50 sieve.

Installation:

(1) Diversion dikes should be installed prior to and maintained for the duration of construction and should intercept no more than 10 acres of runoff.

(2) Dikes should have a minimum top width of 2 feet and a minimum height of compacted fill of 18 inches measured form the top of the existing ground at the upslope toe to top of the dike and having side slopes of 2:1 or flatter.

(3) The soil for the dike should be placed in lifts of 8 inches or less and be compacted to 95 % standard proctor density.

(4) The channel, which is formed by the dike, must have positive drainage for its entire length to an outlet.

(5) When the slope exceeds 2 percent, or velocities exceed 6 feet per second (regardless of slope), stabilization is required. Situations in which velocities do not exceed 6 feet per second, vegetation may be used to control erosion.

Inspection and Maintenance Guidelines:

(1) Swales should be inspected weekly and after each rain event to determine if silt is building up behind the dike or if erosion is occurring on the face of the dike. Locate and repair any damage to the channel or clear debris or other obstructions so as not to diminish flow capacity.

(2) Silt should be removed in a timely manner.

(3) If erosion is occurring on the face of the dike, the slopes of the face should either be stabilized through mulch or seeding or the slopes of the face should be reduced.

(4) Damage from storms or normal construction activities such as tire ruts or disturbance of swale stabilization should be repaired as soon as practical.

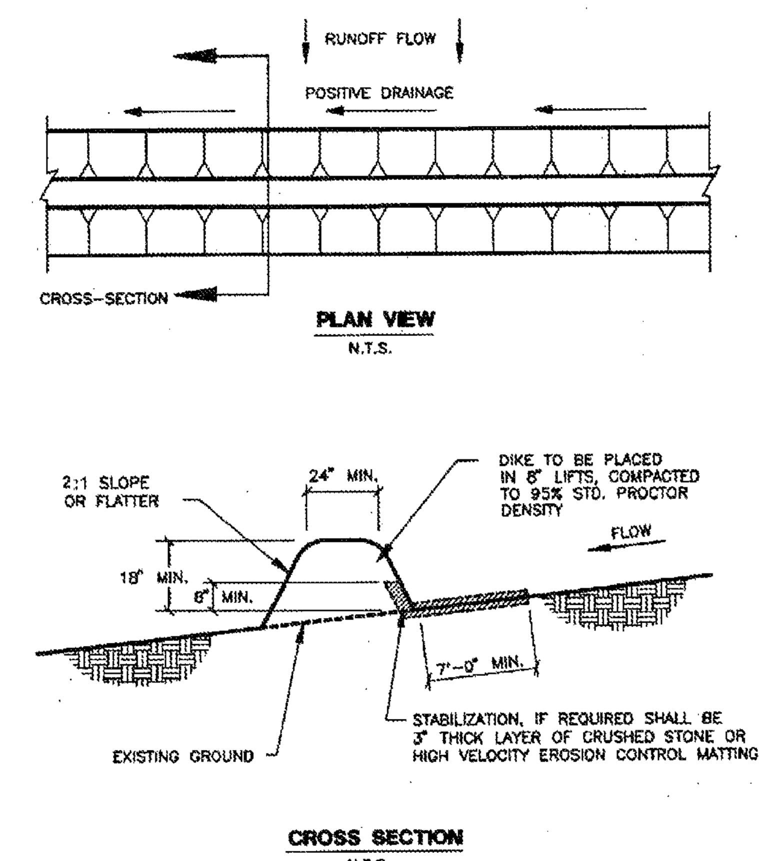

Figure 1-8 Schematic of a Diversion Dike (NCTCOG, 1993b)

DIVERSION BERM/DIKE DETAIL
n.t.s.

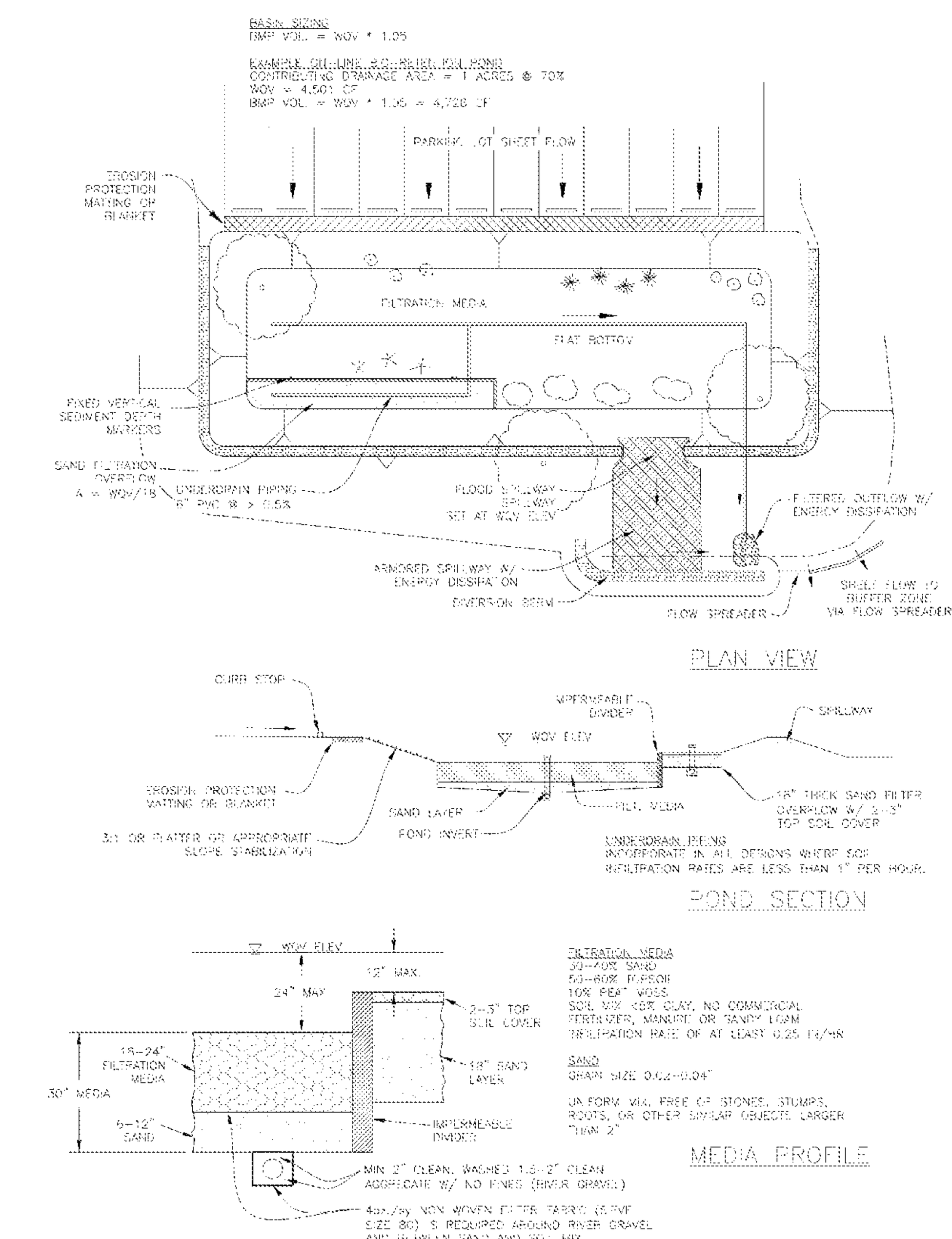

Figure 4-1: Bioretention Basin with Sand Filter Overflow Schematic

NOTES:

1. Underdrain piping perforations shall be smaller than surrounding aggregate (typical < 3/8" dia.) and maximum spacing between rows of perforations shall be < 6 inches.
2. Each individual underdrain pipe shall have cleanout access that is flush with the ground surface and located outside the basin floor on the basin side slope.
3. Overall vegetation density must be > 80% with no large bare spots.
4. Include minimum of 3 species each of trees and shrubs and plant 2-3 shrubs per tree. Provide 1 large tree and 3 shrubs or 2 small trees and 3 shrubs per 5,000 sq. ft. See section 4.2.1(4) of the LCRA Technical Manual for recommend species.
5. A 1-year vegetation warranty is required on all plants and trees.

STATE OF TEXAS — FRANK T. PHELAN — 93874 — LICENSED PROFESSIONAL ENGINEER — 5/3/13

JEC
Jay Engineering Company, Inc.
P.O. Box 1220
Leander, Texas 78646-1220
Tel. (512) 259-3882 Fax. (512) 259-8016
TEXAS REGISTERED ENGINEERING FIRM F-4780

CRYSTAL FALLS WEST - SEC. 1
WRP, OFFSITE LIFT STA. & RECLAIMED WATER PUMP STA.
STANDARD DETAILS

no.	date	Revisions	appv.

THE LOOKOUT GROUP
SCALE: AS NOTED DWN: JJD DESIGN: SDK DATE: APRIL 2013
DWG. NO. AS NOTED JOB NO. 157-045-20

Sheet
D.4.0

PEC TRANSFORMER w/ 480 V 3-PHASE, 60HZ SERVICE.

CONTRACTOR TO:

1. COORDINATE ELECTRICAL SERVICE EXTENSION WITH PEC

2. CONTRACTOR TO COORDINATE ALL NECESSARY INSTALLATION MEASURES FOR FOUNDATION. PEDESTAL, METER, AND SERVICE EXTENSION FROM ELECTRICAL POWER SOURCE.

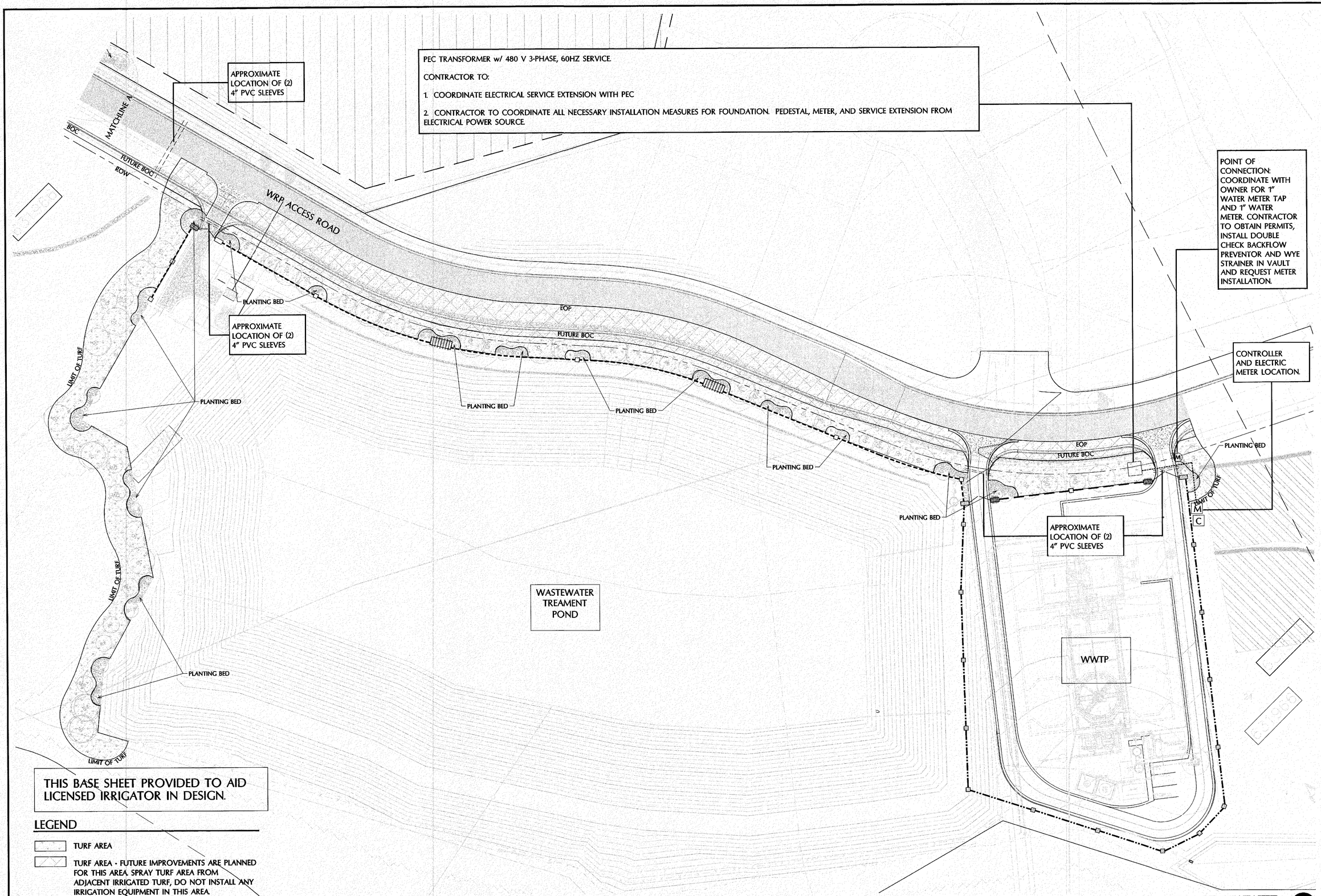

THIS BASE SHEET PROVIDED TO AID LICENSED IRRIGATOR IN DESIGN.

LEGEND

TURF AREA

TURF AREA - FUTURE IMPROVEMENTS ARE PLANNED FOR THIS AREA. SPRAY TURF AREA FROM ADJACENT IRRIGATED TURF, DO NOT INSTALL ANY IRRIGATION EQUIPMENT IN THIS AREA.

Notes

SEE SHEET LI-3 FOR NOTES AND DETAILS

1 PHASE 1 WWTP

SCALE : 1" = 30'

0 15 30 60

NORTH

planning + landscape architecture

712 Congress Avenue, Suite 300
Austin, Texas 78704
(512) 480-0032

Irrigator's Seal

NOTE:
These drawings are only intended to show the DESIGN INTENT and are not meant to provide fully detailed construction information regarding materials, structure or methods. The Contractor shall be responsible for the design/build construction of the project,preparation of shop drawings for all engineered elements, and structural integrity and durability of the improvements.

TRAVISSO
PHASE 1
WASTEWATER TREATMENT PLANT

ISSUED	REVISIONS
July 23, 2013 Bid	1
	2
	3

PROJECT NO.: 123924
FILE: L:\2012\123924\DD
REF: L:\2012\123924\
DRW: PC
RVW: MS

Irrigation Base

July 23 , 2013

LI-1

THIS BASE SHEET PROVIDED TO AID LICENSED IRRIGATOR IN DESIGN.

LEGEND

TURF AREA

TURF AREA - FUTURE IMPROVEMENTS ARE PLANNED FOR THIS AREA. SPRAY TURF AREA FROM ADJACENT IRRIGATED TURF, DO NOT INSTALL ANY IRRIGATION EQUIPMENT IN THIS AREA.

Notes

SEE SHEET LI-3 FOR NOTES AND DETAILS

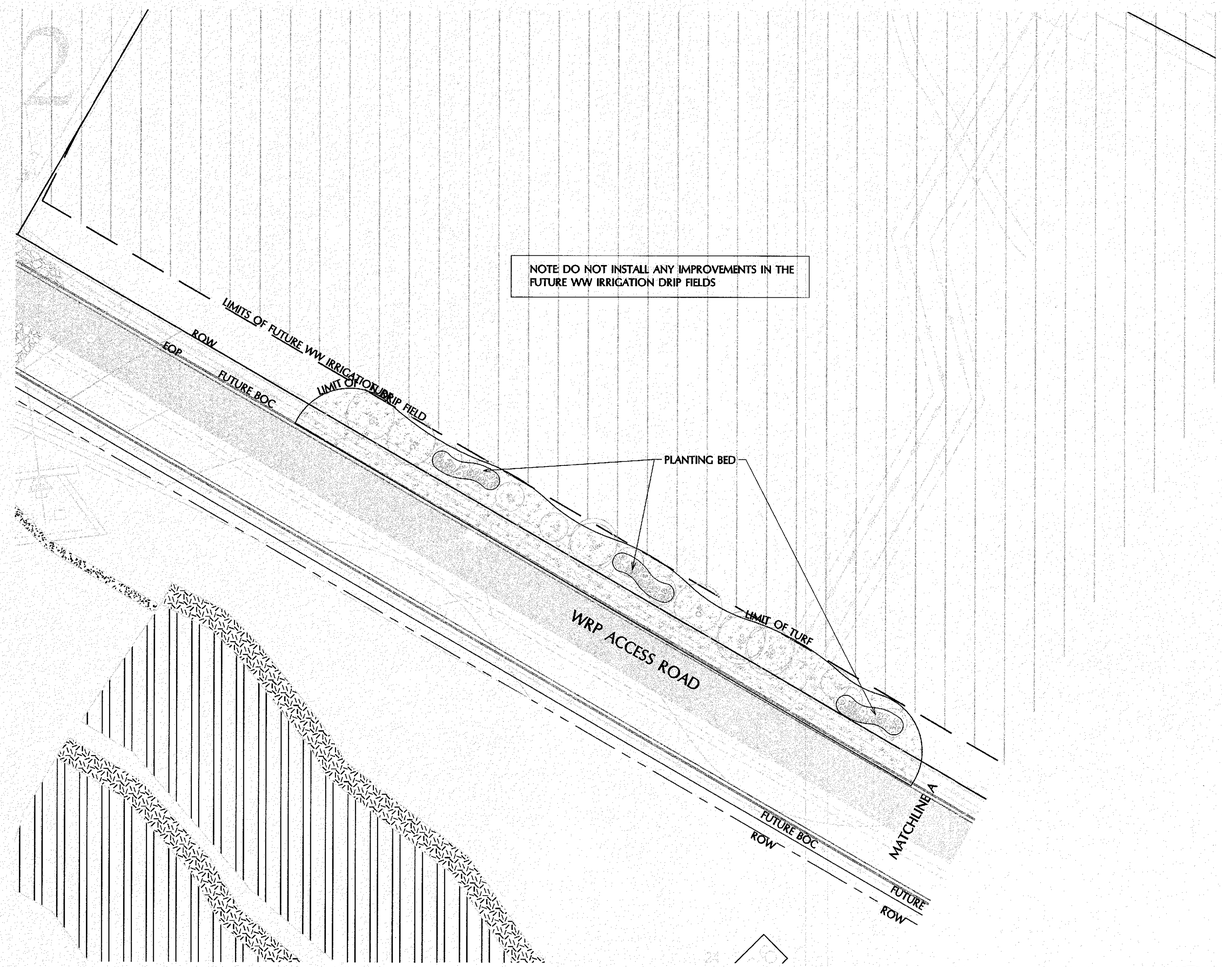

1 PHASE 1 WWTP

SCALE : 1" = 30'

0 15 30 60

NORTH

planning • landscape architecture

712 Congress Avenue, Suite 300
Austin, Texas 78704
(512) 480-0032

Irrigator's Seal

NOTE:
These drawings are only intended to show the DESIGN INTENT and are not meant to provide fully detailed construction information regarding materials, structure or methods. The Contractor shall be responsible for the design/build construction of the project,preparation of shop drawings for all engineered elements, and structural integrity and durability of the improvements.

TRAVISSO
PHASE 1
WASTEWATER TREATMENT PLANT

ISSUED
July 23, 2013 Bid

REVISIONS

PROJECT NO.: 123924
FILE: L:\2012\123924\DD
REF: L:\2012\123924\
DRW: PC
RVW: MS

Irrigation Base

July 23 , 2013

LI-2

NOTE:
PER SETTLEMENT AGREEMENT - In the Matter of Application by the City of Leander and Lookout Partners, LP. to the Texas Commission on Environmental Quality for Permit No. WQ0015042001. The landscape requirements dictate every 100' of wall facing the WRP Access Drive 2 shade trees, 3 ornamental trees and 20 shrubs need to be provided.

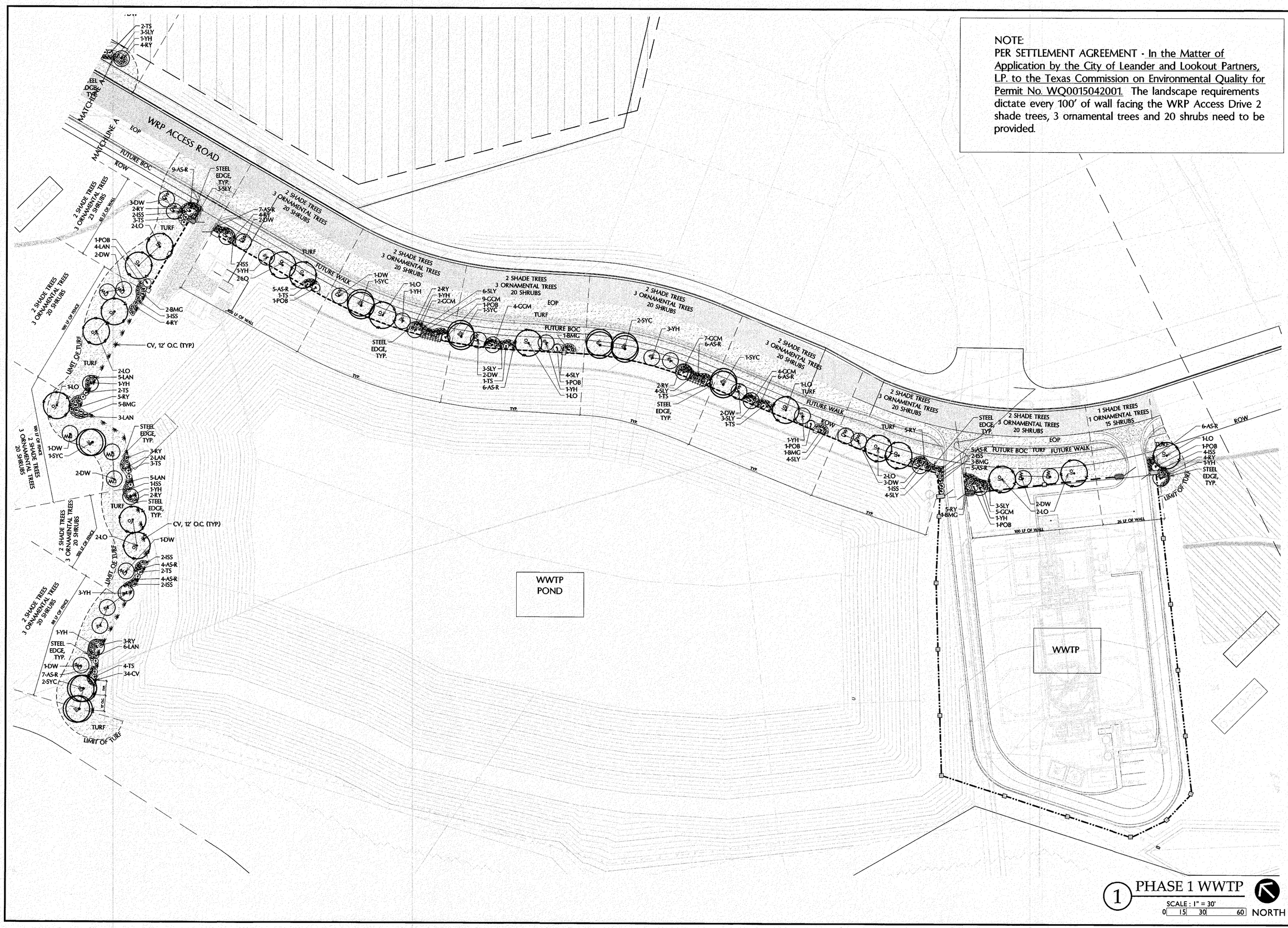

TVG
planning • landscape architecture
712 Congress Avenue, Suite 300
Austin, Texas 78704
(512) 480-0032

REGISTERED LANDSCAPE ARCHITECT
MARK W. SMITH
1326
STATE OF TEXAS
7-23-13

NOTE:
These drawings are only intended to show the DESIGN INTENT and are not meant to provide fully detailed construction information regarding materials, structure or methods. The Contractor shall be responsible for the design/build construction of the project,preparation of shop drawings for all engineered elements, and structural integrity and durability of the improvements.

TRAVISSO
PHASE 1
WASTEWATER TREATMENT PLANT

ISSUED	REVISIONS
July 23, 2013 Bid	

PROJECT NO.: 123924
FILE: L:\2012\123924\DD
REF: L:\2012\123924\
DRW: PC
RVW: MS

Planting Plan
July 23 , 2013

LP-1

IRRIGATION NOTES

0. Water for the irrigation system is to be supplied by proposed dedicated irrigation meter to be coordinated by the Contractor as noted on the drawings. Meter location is shown schematically and exact location is to be field verified by the Contractor. The Contractor is responsible for all permits and cost for meter installation. The Contractor shall verify operating pressures prior to designing the system. Pressure reducer valves shall be utilized if necessary to control excessive pressure. In designing the pipe layout and sizing, do not exceed velocities of 10 feet per second (FPS) through meters, 7.5 FPS through backflow preventers, or 5 FPS through valves and piping.

1. Contractor to provide irrigation "Sketch Plan" at time of bid. Following the review of the "Sketch Plan", The Contractor selected by the Owner shall prepare complete irrigation plans based on the contract document plans, irrigation materials list, notes, details and submit the plans to the Owner for review prior to the award of the contract. The Contractor may obtain base sheets necessary to prepare irrigation plans from the Owner's Representative. The plans shall clearly show the layout, size and type of all system components including controller, valves, heads, piping, quick coupling valves, etc. The Owner has the right to qualify the irrigation design plan and bid prior to the award of the contract. The irrigation plan shall be submitted for permitting and therefore must meet all government requirements.

2. Contractor shall be a Registered Licensed Irrigator in the State of Texas.

3. Contractor shall provide a complete, functioning automatic irrigation system. This includes all materials, labor, fees, permits, equipment, and other items incidental in accomplishing the end.

4. All equal materials (substitutions) shall have written approval from the Owner's Representative prior to installation.

5. Contractor shall be responsible for locating any existing underground utilities (i.e. gas, water, wastewater, electric, telephone, etc.) or obstacles prior to trenching. Contractor shall make good all damage resulting from Contractor's operations, at no cost to the owner.

6. Contractor shall verify site conditions and familiarize himself with conditions which might affect the work which is being bid.

7. The Contractor shall procure all permits, license, and pay all charges and fees and give all necessary notices for the completion of the work.

8. Coordinate work with other sitework trades.

9. The contractor shall verify the available operating pressure prior to the design of the system.

10. Review sleeve locations shown on plan installed by general contractor.

11. Contractor shall make all connections from power source to controller. Contractor shall pay for all fees and permitting.

12. All control wire shall be 14 AWG Solid Copper Insulated Direct Burial Wire UF UL listed. Specified waterproof connectors to be used on all connections.

13. Lawn, planting beds, and tree bubblers shall be irrigated on separate zones. Planting beds shall be micro-zoned to separately irrigate beds with different slope and solar exposure conditions.

14. Irrigation head layout shall provide head-to-head coverage.

15. Use irrigation head type appropriate to space, slope and plant material requirements.

16. All piping is to be installed to be routed around existing and proposed site elements including root balls of existing and proposed trees and shrubs. Reference Landscape Planting and Construction plans for additional information on existing and proposed conditions. Manual digging may be necessary to protect plant root zones and existing utilities.

17. Provide supplemental irrigation to proposed shade trees by using adjustable stream bubblers "Tree" zone. Stake tree locations for review prior to installation of irrigation. (2 Bubblers per shade tree, 1 bubbler per ornamental tree).

18. Size pipe to ensure necessary gpm to each irrigation head. Refer to manufacturer's specifications for gpm requirements. 12" minimum cover required over all lateral pipes, 18" on mainline and wires.

19. All valve boxes and sprinkler heads to be mounted flush and perpendicular to finish grade.

20. Provide 4" deep layer of clean pea gravel at bottom of all valve boxes and vaults, being careful not to cover valves or pots.

21. Adjust heads for distance and arc; avoid over spray onto walks and buildings. At time of Substantial Completion walk through, anticipate nozzle changes as required to obtain optimum performance and coverage; such changes shall be at no charge to the Owner.

22. Contractor will guarantee all materials and workmanship for a period of one year.

NON-POTABLE RECLAIMED IRRIGATION WATER:

1. RECLAIMED WATER WILL NOT BE USED FOR THE IRRIGATION SYSTEM, BUT WILL BE CONVERTED TO A NON-POTABLE SOURCE AT A LATER DATE. INSTALL PURPLE (PANTONE 522) COLORED IRRIGATION EQUIPMENT SIGNIFYING THE USE OF NON-POTABLE WATER.
2. ALL IRRIGATION EQUIPMENT ASSOCIATED WITH THE TRAVISSO WWTP SHALL COMPLY WITH ALL STATE AND LOCAL CODES FOR RECLAIMED WATER DISTRIBUTION.
3. ALL IRRIGATION MAINLINE AND LATERAL LINES SHALL BE NON-POTABLE PURPLE CLASS 200 PVC PIPE.
4. ALL SPRINKLER HEADS AND VALVE BOX LIDS SHALL HAVE THE NON-POTABLE WATER COVER.
5. ALL ELECTRIC VALVES SHALL HAVE RECLAIMED WATER IDENTIFICATION HANDLE.

IRRIGATION MATERIALS LIST

1. ½" PVC Class 200 (w/trenching)
2. ¾" PVC Class 200 (w/trenching)
3. 1" PVC Class 200 (w/trenching)
4. 1-1/4" PVC Class 200 (w/trenching)
5. 1-1/2" PVC Class 200 (w/trenching)
6. 2" PVC Class 200 (w/trenching)
7. 3" PVC Class 200 (w/trenching)
8. Hunter PROS-04/15'
9. Hunter PROS-04/12'
10. Hunter PROS-06/10'
11. Hunter PROS-06/8'
12. Hunter PROS-06/5'
13. Hunter PROS-04/PCN-50 Bubbler
14. Hunter PROS-06/Strip Nozzle
15. Hunter PROS-04/Adj. Arc Nozzle
16. Hunter PROS-12 Spray Head
17. Hunter Rotary Head PGJ-2.5
18. HQ-33DRC Coupling Valve
19. Hunter ICV-FS Elec. Valve
20. Hunter WRFC Freeze/Rain Sensor
21. Hunter ACC 99B Controller
22. Hunter ICD 100 Decoder
23. Backflow Device
24. PVC Ball Valve in Std. Valve Box
25. Valve Box
26. Gate Valve
27. #14 A.W.G. Control Wire
28. Wire Splice

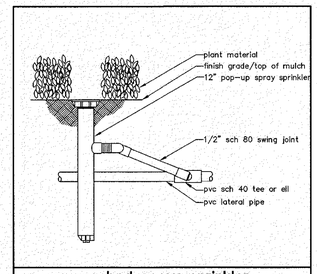

pop-up bed spray sprinkler

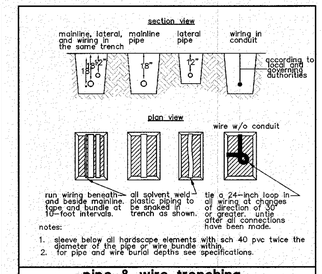

pipe & wire trenching

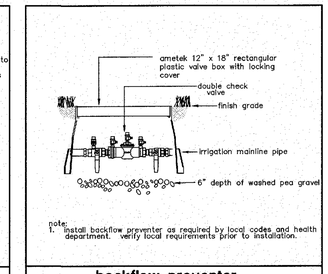

backflow preventer

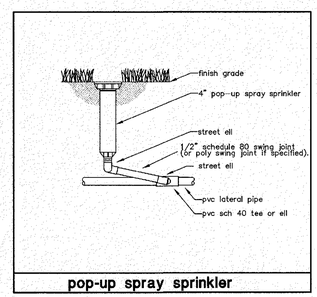

pop-up spray sprinkler

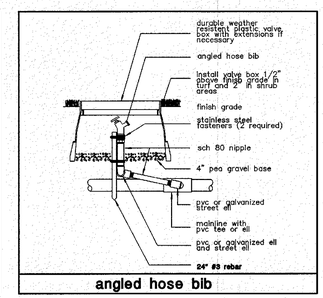

angled hose bib

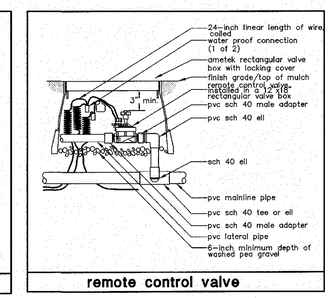

remote control valve

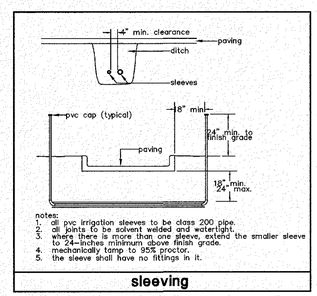

sleeving

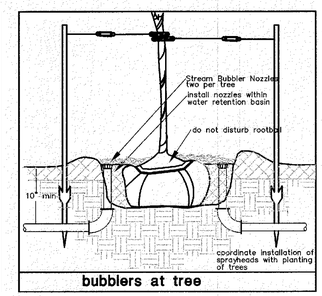

bubblers at tree

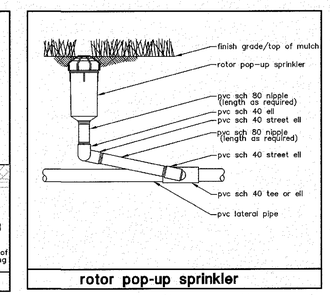

rotor pop-up sprinkler

planning • landscape architecture

712 Congress Avenue, Suite 300
Austin, Texas 78704
(512) 480-0032

Irrigator's Seal

NOTE:
These drawings are only intended to show the DESIGN INTENT and are not meant to provide fully detailed construction information regarding materials, structure or methods. The Contractor shall be responsible for the design/build construction of the project,preparation of shop drawings for all engineered elements, and structural integrity and durability of the improvements.

TRAVISSO
PHASE 1
WASTEWATER TREATMENT PLANT

ISSUED	REVISIONS
July 23, 2013 Bid	△
	△
	△

PROJECT NO.: 123924
FILE: L:\2012\123924\DD
REF: L:\2012\123924\
DRW: PC
RVW: MS

Irrigation Notes & Details

July 23 , 2013

LI-3

NOTE:

UTILITY LOCATIONS SHOWN HEREON ARE APPROXIMATE. CONTRACTOR IS TO VERIFY LOCATIONS OF ALL UTILITY LINES PRIOR TO COMMENCING WORK.

IRRIGATION LINE FITTINGS SHOWN ON THIS SHEET ARE FOR GENERAL LOCATION PURPOSES AND ARE DRAWN AT A LARGER SCALE THAN ACTUAL SIZE FOR CLARITY.

RECLAIMED WATER SYSTEM NOTES:

1. ALL PVC WATER MAINS TO BE DR14, PURPLE PIPE, UP TO 12" DIAMETER.
2. ALL MAINS >12" DIA. TO BE DUCTILE IRON, CLASS 250, WRAPPED IN PURPLE SLEEVING.
3. ALL VALVE BOX LIDS TO BE "FLORIDA" STYLE AS SHOWN ON SHEETS C.19.0, PAINTED PURPLE.

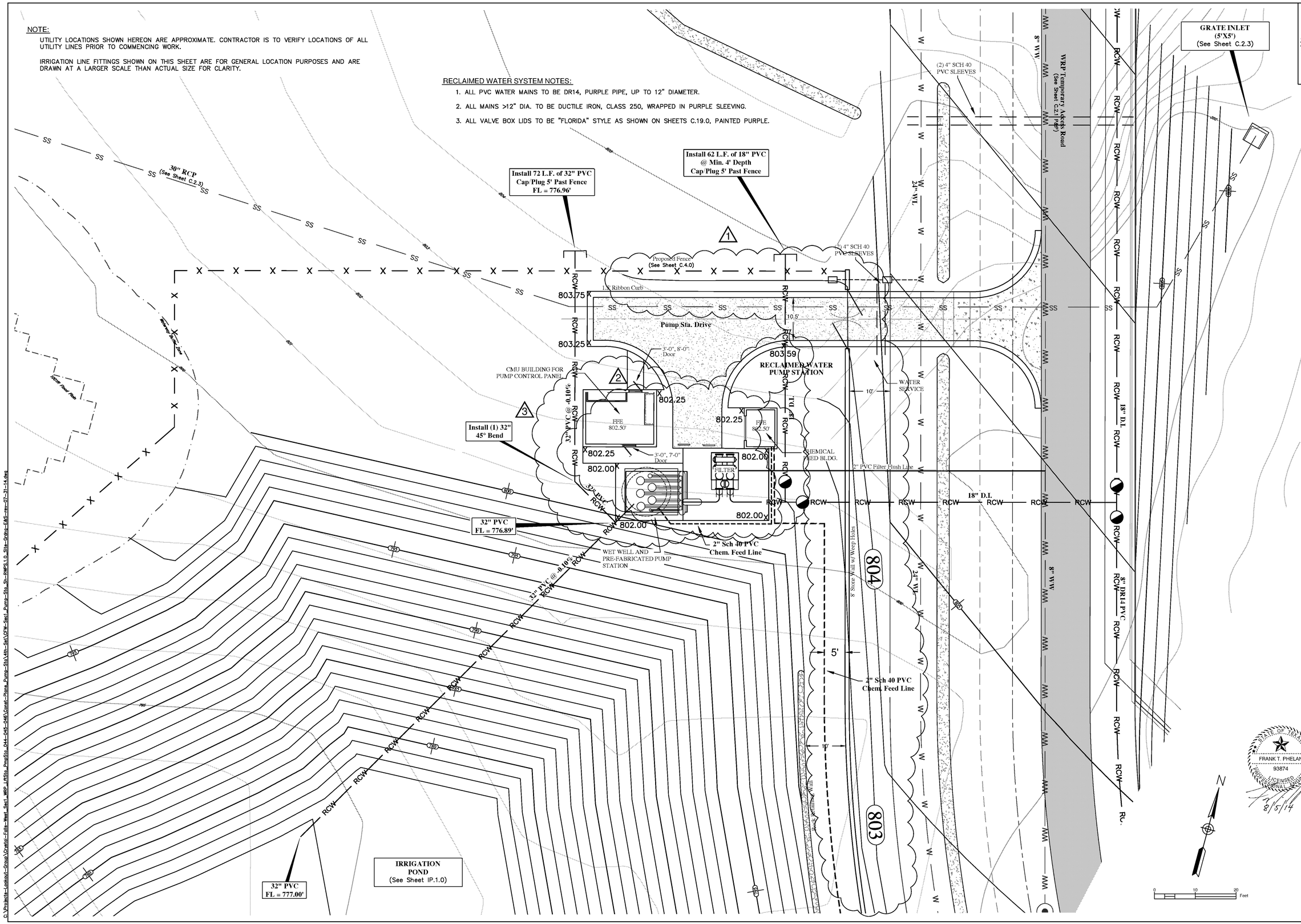

Jay Engineering Company, Inc.
P.O. Box 1220
Leander, Texas 78646-1220
Tel: (512) 259-3882 Fax: (512) 259-8016
Texas Registered Engineering Firm F-4780

CRYSTAL FALLS WEST - SEC. 1
WRP, OFFSITE LIFT STA. & RECLAIMED WATER PUMP STA.

RECLAIMED WATER PUMP STATION SITE GRADING, E&S CONTROL PLAN

THE LOOKOUT GROUP

SCALE: AS NOTED	DWN: JJD	DESIGN: FJJ	DATE: JULY 2014
DWG. NO. AS NOTED		JOB NO. 157-045-20	

no.	date	Revisions	qppv.
4	07/14	Revised Bldgs.& Pads	FTP
3	12/13	Updated Grading Elev.	FTP
2	12/13	Revised Grading	FTP
1			

Sheet RWPS 1.0

NOTE:
PER SETTLEMENT AGREEMENT - In the Matter of Application by the City of Leander and Lookout Partners, L.P. to the Texas Commission on Environmental Quality for Permit No. WQ0015042001. The landscape requirements dictate every 100' of wall facing the WRP Access Drive 2 shade trees, 3 ornamental trees and 20 shrubs need to be provided.

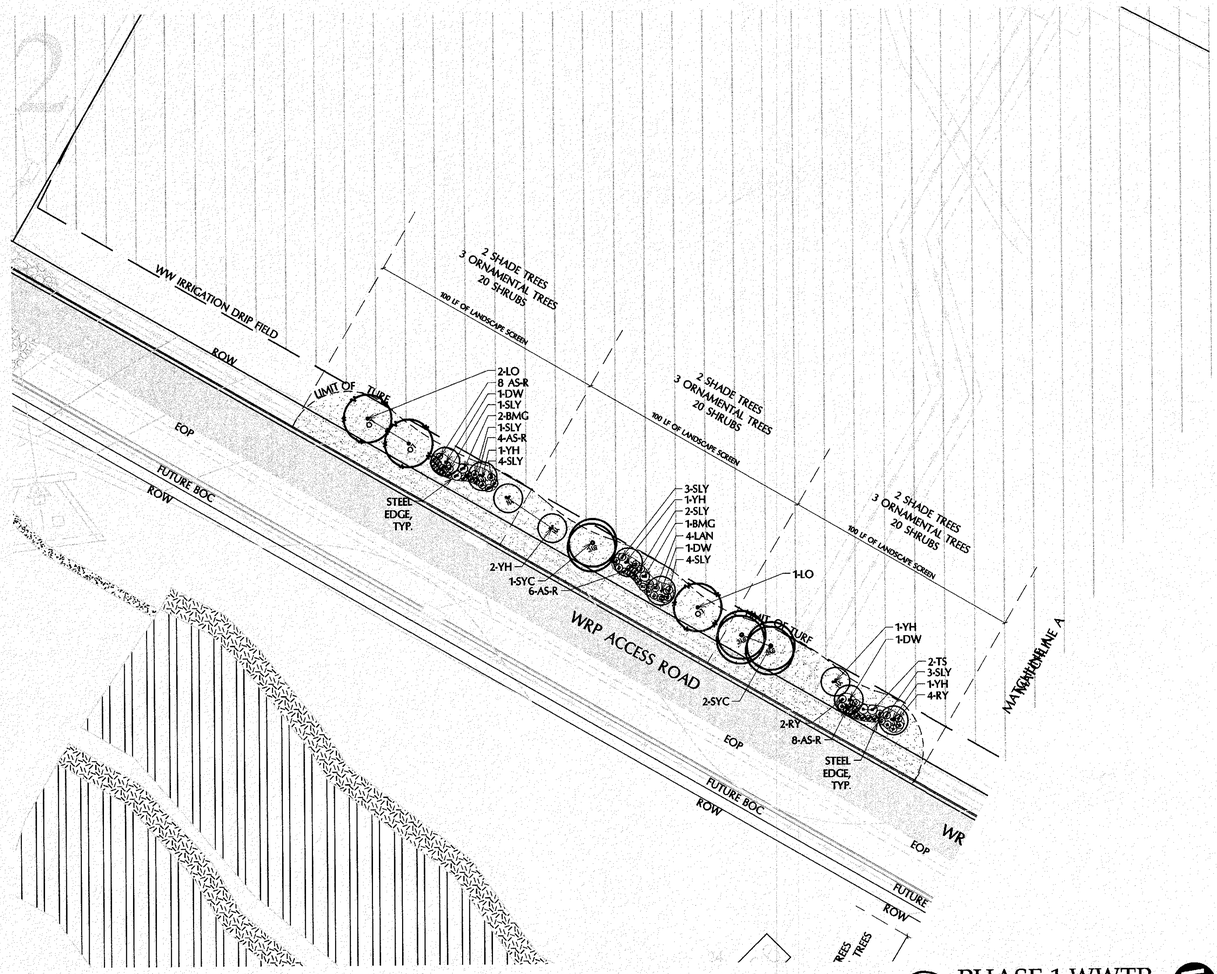

1 PHASE 1 WWTP

SCALE : 1" = 30'

0 15 30 60

NORTH

planning • landscape architecture

712 Congress Avenue, Suite 300
Austin, Texas 78704
(512) 480-0032

REGISTERED LANDSCAPE ARCHITECT
MARK W. SMITH
1326
STATE OF TEXAS

7-23-13

NOTE:
These drawings are only intended to show the DESIGN INTENT and are not meant to provide fully detailed construction information regarding materials, structure or methods. The Contractor shall be responsible for the design/build construction of the project,preparation of shop drawings for all engineered elements, and structural integrity and durability of the improvements.

TRAVISSO
PHASE 1
WASTEWATER TREATMENT PLANT

ISSUED
July 23, 2013 Bid

REVISIONS

PROJECT NO.: 123924
FILE: L:\2012\123924\DD
REF: L:\2012\123924\
DRW: PC
RVW: MS

Planting Plan

July 23 , 2013

LP-2

CHEMICAL FEED
CONTROL SEQUENCE

1. DUAL CHEMICAL FEED SYSTEM TO SUPPLY BASELINE FEED CONTINUOSLY & SECOND PUMP TO PROVIDE FLOW PACED FEED, CONTROLED BY RWPS 4–20 ma SIGNAL.

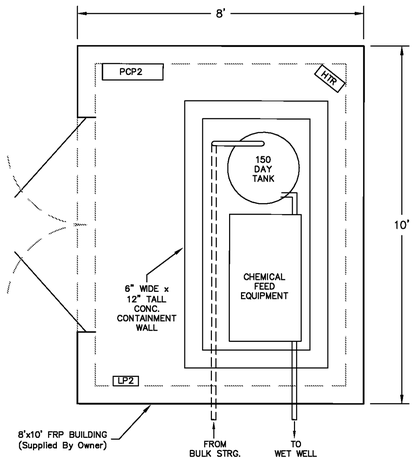

RWPS CHEMICAL FEED BLDG.

scale: 1/2" = 1'-0"

NOTES:
1. ALL CHEMICAL FEED PIPING TO BE 1" SCHEDULE 80 PVC UNLESS NOTED OTHERWISE.
2. SUPPLY (2) STENNER 45MS AND (2) BLUE WHITE M2V PUMPS.
3. DAY TANK TO BE FILLED VIA MOMENTARY PUSH BUTTON CONTROL OF TRANSFER PUMP. PUSH BUTTON CONTROL TO BE MOUNTED ON RACK OF PUMP CONTROL PANEL.
4. FLOOR AND CHEMICAL CONTAINMENT CURBIBG TO BE COATED WITH CHEMICAL RESISTANT EPOXY COATING (SHERWIN WILLIAMS COR–COTE HCR).

NOTE:
1. SEE SHEET C.10.0 FOR CHEMICAL FEED EQUIPMENT DETAIL.

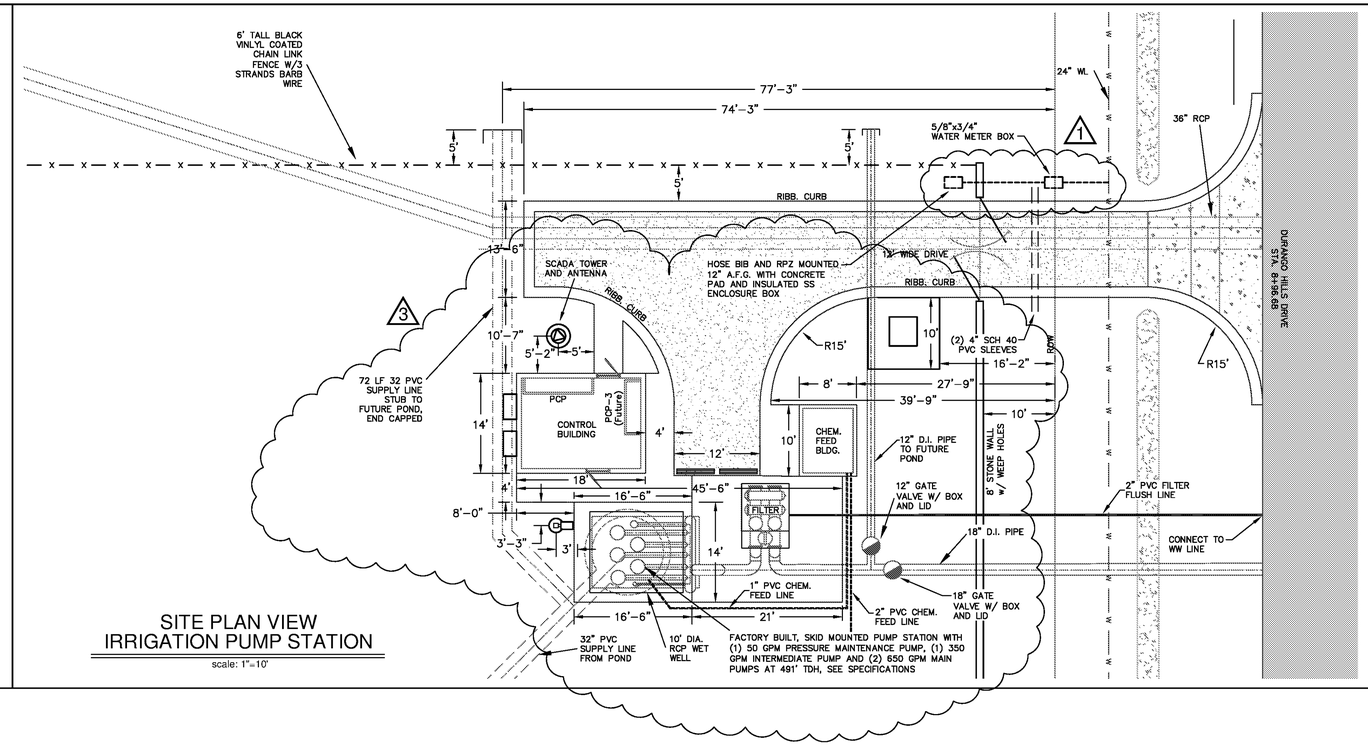

SITE PLAN VIEW
IRRIGATION PUMP STATION

scale: 1"=10'

NOTES:
1. SCADA TOWER TO BE 40' TALL A.F.G., PER SPECS. & MFR. RECOMMENDATIONS, SEE SHEET D.4.0.
2. ANTENNA TO BE 10db YAGE MOUNTED ON 10' STINGER (50' A.F.G.).

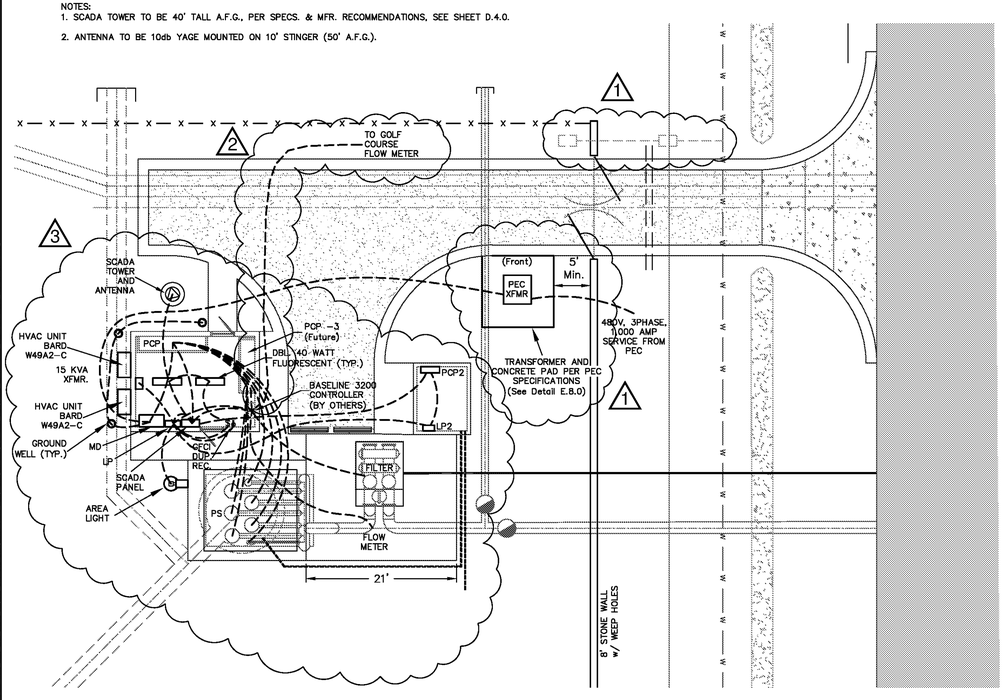

ELECTRICAL SITE PLAN
IRRIGATION PUMP STATION

scale: 1"=10'

ELECTRICAL LOAD CHART

ELECTRICAL LOAD CHART @ 480 V, 3ø, 3W SERVICE				
LOAD DESCRIPTION		CUMULATIVE LOAD CURRENT (AMPERES)		
		PHASE I	PHASE II	
MOTORS – FLA		408	892	
25% LARGEST MOTOR		39	39	
OTHERS		54	54	
TOTAL:	AMPS	501	985	
	KVA	417	819	
SERVICE CONDUCTORS: 2 – 3 1/2" CONDUITS EACH WITH 3–700MCM(P), #2/0 (G)				

CONDUIT AND CABLE SCHEDULE

CONDUIT RUN	DESCRIPTION	ROUTING	SIZE & TYPE
PEC–PEC XFMR	PEC ELECTRICAL SERVICE	PRIMARY CONDUITS TO PEC PAD XFMR.	UTILITY SPECIFICATIONS
PEC XFMR–MD	SERVICE TO MAIN DISCONNECT	FROM PAD XFMR. TO MAIN SERVICE DISCONNECT	(6) 700 MCM, 2 #2/0 GND., (2) 3–1/2" C.
MD – PCP1/ PCP3	MAIN DISCONNECT TO PUMP CONTROL PANEL	FROM MAIN DISCONNECT TO PUMP STATION CONTROL PANEL	(6) 700 MCM, 2 #2/0 GND., (2) 3–1/2" C.
PCP1–PS PCP3–PS	PUMP POWER AND MONITORING	FROM PUMP CONTROL PANEL TO PUMPS	CABLE: PUMP, STA. MFR. SPECS. CONDUIT: PER NEC (PCP–3 CONDUIT ONLY)
MD – XFMR	TRANSFORMER	FROM MAIN DISCONNECT TO STEP DOWN TRANSFORMER	2 #2, 1 #6 GND., 1" C
PCP1–SCADA	SCADA CIRCUITS	FROM PUMP CONTROL PANEL TO TOWER	CABLE: SCADA, MFR. SPECS. CONDUIT PER NEC
PCP1–LP1 & LP2	LOAD PANEL	FROM PCP TO LOAD PANEL	2 #2, 1 #6 GND., 1" C
LP1–AREA LIGHT	AREA LIGHT	FROM LP TO AREA LIGHT	2 #12, 1 #12 GND., 1" C
LP–DR/SL	GFCI DUPLEX RECEPTICLE AND SHELTER LIGHT	FROM LP TO DUPLEX RECEPTICLE AND SHELTER LIGHT	4 #12, 1 #12 GND., 1" C
SCADA – TWR.	ANTENNA CABLE	FROM SCADA PANEL TO ANTENNA TOWER	PER MFR. SPECS.
PCP1–PCP2	CHEM. FEED CONTROL	FROM PCP1 TO PCP2	4 #12, 1 #12 GND, 1" C
PCP2–PUMPS	CHEM. FEED CONTROL & POWER	FROM PCP2 TO CHEM. FEED PUMPS	2 #12, 1 #12 GND., 3/4" C AND 2 #12, 3/4" C PER PUMP FOR 5 PUMPS.
LP1–FILTER	FILTER	LP1 TO FILTER	PER MFR. SPECS.
LP1–BASE 3200	BASELINE 3200	FROM LP1 TO IRRIG. CONTROLLER	3 #12, 1" C
PCP1–BASE 3200	BASELINE 3200	PUMP CONTROL PANEL TO IRRIG. CONTROLLER	3 #12, 1" C
BASE 3200–G.C.	GOLF COURSE METER	FROM IRRIG. CONTROLLER TO GOLF COURSE METER	3 #12, 1" C
XFMR–LP–1, LP–2.	LOAD PANELS	FROM TRANSFORMER TO LOAD PANELS	2 #2, 1 #6 GND., 1" C
SCADA PCP–2	PUMP CONTROL PANEL–2	FROM SCADA TO PUMP CONTROL PANELS	3 #12, 1" C

SCADA – G.C. GOLF COURSE IRRIGATION METER FROM GOLF COURSE CABLE: PER METER SPECS
IRRIGATION METER TO SCADA SYSTEM CONDUIT: PER NEC

GENERAL BUILDING NOTES:
1. CONTROL BUILDING TO 10' TALL SPLIT FACED CMU WITH A 3' X 7' DOOR. SEE DETAILS SHEET C.17.0 FOR CMU DOOR DETAILS.
2. CHEMICAL FEED BUILDING TO BE 8'X10'X8' FRP, SUPPLIED BY OWNER.
3. BUILDING FOUNDATION SLAB TO BE 6" CONCRETE SLABS CONTAINING ONE MAT OF #4 REINFORCING STEEL AT 12"C–C E.W. AND MIN. 2' TALL X 12" WIDE CONTINUOUS PERIMETER GRADE BEAM WITH #4 CLOSED STIRRUPS ON 18" CENTERS AND TWO #6 TOP AND BOTTOM BARS CONTINUOUS. SEE TYPICAL INTERIOR BEAM DETAIL SHEET S.6.0. & STRUCTURAL NOTES ON S.1.0 AND S.2.0.
4. SLABS TO BE ON 12" COMPACTED FLEXIBLE BASE PAD, PLACED IN MAXIMUM 6" LIFTS ON 8" MOISTURE TREATED AND COMPACTED SCARIFIED SUBGRADE.
5. CONTROL BUILDING ROOF TO BE 12' X 16' X 4" PRECAST CONCRETE HOLLOW CORE SLAB WITH FULLY FLASHED EDGES AND TPO ROOF ON TAPERED INSULATION SLOPED TO BUILDING REAR FOR PROPER DRAINAGE.
6. SUPPLY 28,500 BTU/HR. AC UNIT FOR COTROL BUILDING, GRANGER 13R467 OR EQUAL.

WET WELL NOTES:
1. WET WELL TO BE 10' DIA. RCP PER ASTM C–478.
2. PUMP STATION & FILTER SLAB TO BE 6" CONCRETE SLABS CONTAINING ONE MAT OF #4 REINFORCING STEEL AT 12"C–C E.W. AND MIN. 2' TALL X 12" WIDE CONTINUOUS PERIMETER GRADE BEAM WITH #4 CLOSED STIRRUPS ON 18" CENTERS AND TWO #6 TOP AND BOTTOM BARS CONTINUOUS.
3. WET WELL BOTTOM SLAB TO BE 14' X 14' X 1' WITH 1 MAT OF #4 BARS ON 12" C–C E.W. TOP OF BOTTOM SLAB ELEVATION IS 771.00
4. 32" PVC FL @ WET WELL IS 776.88.

GENERAL ELECTRICAL NOTES:
1. PROVIDE PERMANENT WATERPROOF TAGS FOR ALL WIRES. TAGS SHALL BE CONSISTENT THROUGHOUT THE ENTIRE LENGTH OF THE CONDUCTOR AND SHALL BE AS SHOWN ON THE ELECTRICAL WIRING OR SCHEMATIC DIAGRAMS AS APPLICABLE.
2. TRANSFORMER PAD TO BE PER CURRENT PEC SPECIFICTIONS.
3. ALL WORK TO BE PER NEC, LATEST EDITION.
4. MAIN DISCONNECT TO HAVE LIGHTNING ARRESTOR AND SURGE ARRESTOR CAPACITORS.
5. PUMP CONTROL BUILDING INTERIOR LIGHT TO BE DUAL 40 WATT FLUORESCENT
6. AREA LIGHT TO HAVE PHOTO CELL AND MOTION SENSOR CONTROL.
7. INSTALL (3) GROUND WELLS AROUND PERMITER OF BUILDING PER DETAIL SHEET E.8.0

STATE OF TEXAS
FRANK T. PHELAN
93874
LICENSED PROFESSIONAL ENGINEER
8/5/14

rev.	date	Revisions	dwn.
4	07/14	Updated Bldgs., Pads & Electrical Equipment	FTP
3	12/13	Updated Electrical	FTP
2	11/13	Wetwell Modification	FTP
1		Updated	gppv.

THE LOOKOUT GROUP

SCALE: AS NOTED DWN: FTP DESIGN: FTP DATE: JUL 2014
DWG. NO. AS NOTED JOB NO. 193-030-20

CRYSTAL FALLS WEST, SEC. 1
WRP, OFFSITE LIFT STA. & RECLAIMED WATER PUMP STA.
RECLAMATION WATER PUMP STATION
SITE & ELECTRICAL
PLANS AND DETAILS

Sheet
RWPS
2.0

LANDSCAPE PLANTING NOTES

1. Existing Conditions: The Landscape Contractor shall be responsible for visiting the site prior to submitting Bid Proposal, to become familiar with all conditions affecting the proposed work. The Landscape Contractor shall identify and review all underground utility locations prior to commencing work and shall exercise extreme caution when working close to utilities, and shall notify the Owner's Representative of apparent conflicts with construction and utilities so that adjustments can be planned prior to installation.

2. Layout, Grading and Topsoil: The Landscape Contractor shall be responsible for transporting and placing 1" depth of imported "chocolate" loam topsoil on site areas as needed to prepare them for the specified grass sod and/or seeding. Submit sample of topsoil for approval by Landscape Architect. The Landscape Architect, Landscape Contractor and Owner shall review the extent of this work prior to commencement of installation. FURNISH UNIT PRICE PER CUBIC YARD OF TOPSOIL, TRANSPORTED AND SPREAD. CONTRACT AMOUNT WILL BE ADJUSTED BASED ON ACTUAL, APPROVED QUANTITIES NEEDED AND FURNISHED.

   PHASE I: 124 CY TOPSOIL

   The Landscape Contractor shall be responsible for accurately laying out the plant beds and lawn areas by scaling the Drawings. Layout shall be painted or staked on the ground for review and approval of Owner's Representative prior to excavation. Following approval of layout, closely coordinate the installation of the irrigation system to conform to the approved layout.

   The Landscape Contractor shall be responsible for clearing and rough grading of the planted, sodded and seeded areas. The Landscape Contractor and Owner shall review the extent of clearing and grading of area prior to commencing work. Sod areas shall be raked smooth, removing and disposing of stones over 1" diameter and fine graded to feather into natural grade. All areas shall be fine graded to achieve positive drainage without puddles or standing water.

   The Landscape Contractor shall excavate fully prepared plant beds as required to accommodate a full 6" of prepared soil and 3" mulch layer. Clean, native topsoil removed from these beds may be spread on nearby areas to be sodded or seeded. Stones larger than 1" diameter shall be removed and disposed of off site. Following excavation, place prepared soil in these plant beds. Prepared soil shall consist of 4" imported "chocolate" loam topsoil and 2" Organic Compost Soil Conditioner (such as "Living Earth Technologies", "Back-To-Earth" or other approved manufacturer), thoroughly blended together. This mix shall also be used to backfill planting pits of all pit-planted shrubs and trees. IN BID PROPOSAL, FURNISH UNIT PRICES PER CUBIC YARD OF PREPARED SOIL MIX. SUBMIT SAMPLE FOR REVIEW AND APPROVAL BY LANDSCAPE ARCHITECT.

   PHASE I: 72 CY PREPARED SOIL MIX

   Landscape contractor shall be responsible for erosion control of sloped areas.

3. Weed Control: Prior to preparing lawn areas and plant beds, eradicate all weeds, briars and vines with post-emergent herbicide such as "Round-Up" applied by licensed personnel following manufacturer's recommendations and taking all necessary precautions. Contractor shall be responsible for taking photo record of conditions of site at time of bid sufficient to document pre-construction conditions.

4. BERMUDA GRASS SEEDING: Limits of turf are shown on the Drawings are schematic and not to be construed to be precise. The Landscape Architect, Landscape Contractor and Owner shall review the limits of seeding and Bermuda sodding to commencing installation. Seeded areas shall be lightly scarified by raking. IN BID PROPOSAL, FURNISH UNIT PRICES FOR EACH. THE CONTRACT AMOUNT WILL BE ADJUSTED BASED ON ACTUAL, APPROVED QUANTITIES INSTALLED.

   PHASE I: 4500 SY SEED

5. Mulch: Following planting, mulch "fully-prepared" beds and mulched areas with 3" layer of shredded hardwood mulch and fill basins of pit-planted shrubs and trees with mulch. IN BID PROPOSAL, FURNISH UNIT PRICE PER CUBIC YARD

   PHASE I: 36 CY MULCH

6. Plants: All plants shall be nursery grown, Grade 1 plants meeting American Nursery and Landscape Association standards, typical in shape and size for species. Plants shall not be root-bound nor loose in their containers. Handle all plants with care in transporting, planting and maintenance until inspection and final acceptance. Planting pits for 1 and 5 gallon shrubs shall be at least 8" larger in diameter than the container size. Larger containers sizes and B&B plants shall be planted in pits at least 18" larger in diameter than the ball size. Plants shall be installed to present their best side facing the viewer. Use total quantities of plants indicated; adjust spacing as needed to evenly fill beds. Owner's Representative shall have final approval of plant material layout. PROVIDE UNIT PRICES FOR ALL PLANT MATERIALS. UNIT PRICE IS TO INCLUDE COST OF MATERIAL, LABOR AND TAXES AS REQUIRED TO INSTALL THE PLANTS. UNIT PRICES SHALL BE USED IN THE CASE THAT FEWER OR MORE PLANTS ARE TO BE PLANTED.

7. Warranty: Provide a one-year replacement warranty for all plant materials. Warranty shall cover plants which have died or partially died (thereby ruining their natural shape), but shall not include damage by vandalism, browsing, hail, abnormal freezes, drought or negligence by the Owner. The Warranty is intended to cover Contractor negligence, infestations, disease and damage or shock to plants. Plants replaced under Warranty will be warranted for one year following replacement.

PLANT SCHEDULE

SHADE TREES

ABBR	QUANTITY	COMMON NAME	BOTANICAL NAME	SIZE	SPACING/COMMENTS
LO	20	Live Oak	Quercus virginiana	45 gal, 2.5"-3" cal.; min 12' ht.; 6'-8' spd	Container grown; Single, straight leader; full branching
SYC	71	~~Mexican Sycamore~~ Cedar Elm	~~Platanus mexicana~~ Ulmus crassifolia	45 gal, 2.5"-3" cal.; min 12' ht.; 6'-8' spd	Container grown; Single, straight leader; full branching

ORNAMENTAL TREES

ABBR	QUANTITY	COMMON NAME	BOTANICAL NAME	SIZE	SPACING/COMMENTS
DW	25	Desert Willow	Chilopsis linearis	30 gal, 8-10' ht. x 4-6' spd.	Container grown, Multi-trunk, Full canopy
YH	22	Yaupon Holly	Ilex vomitoria	30 gal, 8-10' ht. x 4-6' spd.	Container grown, Multi-trunk, Full canopy

SHRUBS

ABBR	QUANTITY	COMMON NAME	BOTANICAL NAME	SIZE	SPACING/COMMENTS
BMG	16	Big Muhly Grass	Muhlenbergia lindheimeri	5 gal, min. 18" ht. x 18" spd.	Plant 48" o.c.
TS	20	Silverado Texas Sage	Leucophullum frutescens 'Silverado'	5 gal, 24" ht. x 24" spd.	Plant 48" o.c.
SLY	53	Soft Leaf Yucca	Yucca recurvifolia	5 gal, 24" ht. x 24" spd.	Plant 36" o.c.
RY	47	Red Yucca	Hesperaloe parviflora	5 gal, 24" ht. x 24" spd.	Plant 36" o.c.
AS-R	96	Autumn Sage Red	Salvia greggii 'Red'	1 gal, full, 18" ht. x 18" spd.	Plant 30" o.c.
POB	7	Pride of Barbados	Caesalipinia gilliesii	5 gal, 24" ht. x 24" spd.	Plant 6' o.c.
ISS	19	Indigo Salvia Spires	Salvia longispicata x farinacea	5 gal, 24" ht. x 24" spd.	Plant 36" o.c.
LAN	29	Texas Lantana	Lantana horrida	5 gal, full	Plant 36" o.c.
GCM	31	Gulf Coast Muhly	Muhlenbergia capillaris	1 gal, full, 18" ht.	Plant 30" o.c.

VINES

ABBR	QUANTITY	COMMON NAME	BOTANICAL NAME	SIZE	SPACING/COMMENTS
CV	34	Tangerine Beauty Crossvine	Bignonia capreolata 'Tangerine Beauty'	5 gal. Min. 3' runner, staked	See plan for spacing, attach runners to chain link fence

TURF GRASS

ABBR	SYMBOL	QUANTITY	COMMON NAME	BOTANICAL NAME	NOTES
TURF SEED		see planting notes	Common Bermuda Grass	Cynodon dactylon	Seed

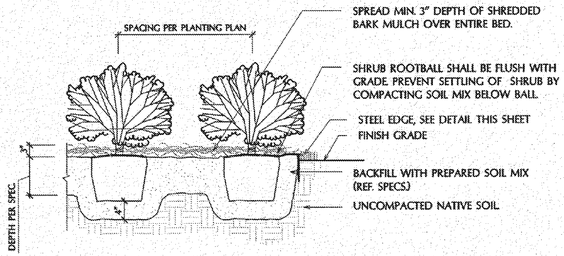

SHRUB BED PLANTING DETAIL

(NOT TO SCALE)

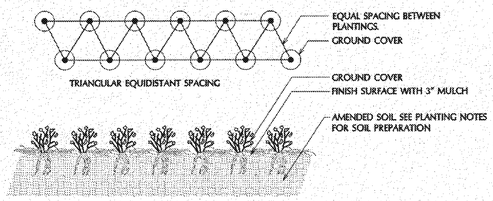

GROUND COVER DETAIL

(NOT TO SCALE)

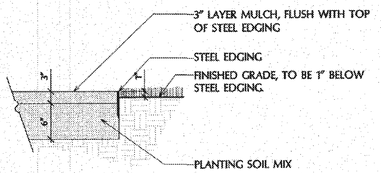

STEEL EDGE DETAIL

(NOT TO SCALE)

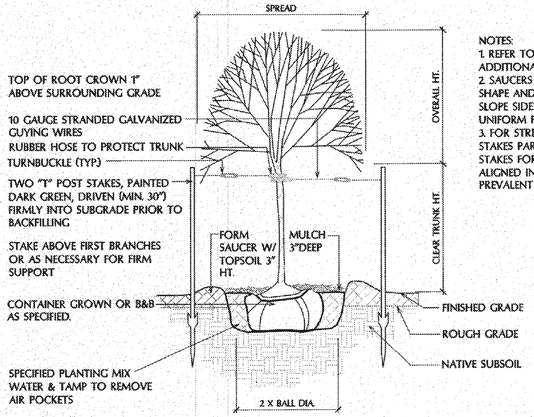

NOTES:
1. REFER TO SPECIFICATIONS FOR ADDITIONAL INFORMATION.
2. SAUCERS TO BE CIRCULAR IN SHAPE AND CONSISTENT IN SIZE. SLOPE SIDES TO GENTLE, UNIFORM PROFILE.
3. FOR STREET TREES, ALIGN STAKES PARALLEL TO CURB. STAKES FOR OTHER TREES TO BE ALIGNED IN DIRECTION OF PREVALENT WINDS.

TREE PLANTING DETAIL

(NOT TO SCALE)

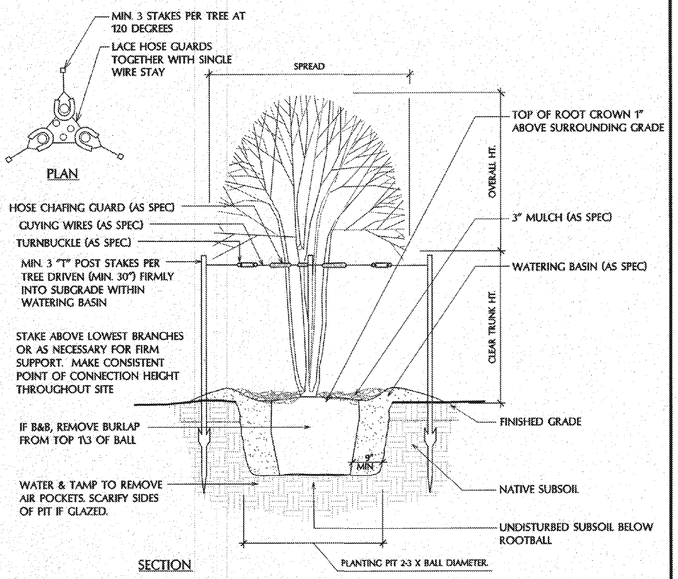

MULTI-TRUNK TREE PLANTING DETAIL

(NOT TO SCALE)

planning • landscape architecture
712 Congress Avenue, Suite 300
Austin, Texas 78704
(512) 480-0032

REGISTERED LANDSCAPE ARCHITECT MARK W. SMITH 1320 STATE OF TEXAS
7-23-13

NOTE:
These drawings are only intended to show the DESIGN INTENT and are not meant to provide fully detailed construction information regarding materials, structure or methods. The Contractor shall be responsible for the design/build construction of the project,preparation of shop drawings for all engineered elements, and structural integrity and durability of the improvements.

TRAVISSO
PHASE 1
WASTEWATER TREATMENT PLANT

ISSUED	REVISIONS
July 23, 2013 Bid	1 8/18/2013
City Comments	

PROJECT NO.: 123924
FILE: L:\2012\123924\DD
REF: L:\2012\123924\
DRW: PC
RVW: MS

Planting Details, Notes & Schedule
July 23 , 2013

LP-3

TRAVISSO

SECTION 1 WATER RECLAMATION PLANT

LEANDER, TEXAS

HARDSCAPE CONTRACT DOCUMENTS

PROJECT TEAM

OWNER

Travisso, Ltd., a Texas limited partnership

Contact: Heath Melton
11200 Lakeline Blvd., Suite 150A
Austin, TX 78717
O: (512) 328-8866

LANDSCAPE ARCHITECT

RVi Planning & Landscape Arch.

Contact: Robert Ruffo
712 Congress Avenue, Suite 300
Austin, TX 78701
O: 512.480.0032

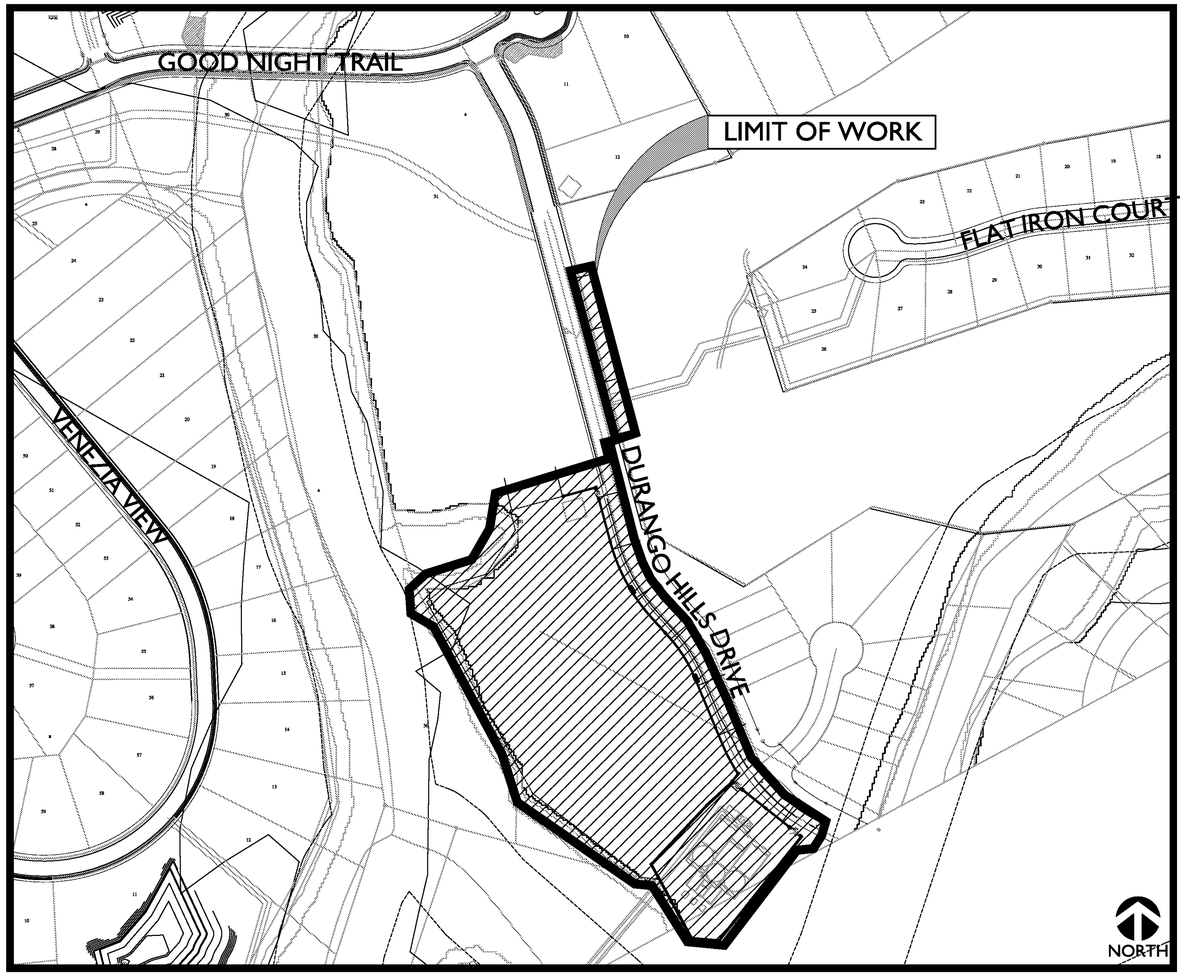

SITE MAP

SHEET INDEX

PAGE #	SHEET TITLE
	Cover / Sheet Index
LH-1	Hardscape Notes
LH-2	Hardscape Plan
LH-3	Hardscape Details
LH-4	Hardscape Details
LH-5	Hardscape Details
LH-6	Hardscape Details

ISSUED	REVISIONS
October 1, 2014	1 VE Rev. 01.28.15

PROJECT NO. : 123924
DRW: JW, PC, RR
RVW: MS, CL

CONSTRUCTION NOTES

GENERAL CONSTRUCTION NOTES

1. Unless otherwise indicated, the Owner's Representative for this project shall be a specifically designated landscape architect from RVi Planning and Landscape Architecture. The Landscape Contractor will be required to coordinate and correspond with the landscape architect from RVi Planning and Landscape Architecture and key consultants for the Owner.

2. These drawings supplement other contractual information which may include Bid Instructions and Project Specifications. Anything mentioned in the Project Specifications and not in the drawings, or vice-versa, shall be of like effect as if shown on or mentioned in both. In case of a discrepancy between Drawings or Project Specifications, the matter shall be immediately submitted to the Owners Representative; without his decision said discrepancy shall not be adjusted by the Landscape Contractor, save only at his own risk and expense. The Landscape Contractor shall not take advantage of any apparent error or omission on the Drawings or in the Specifications. In the event the Landscape Contractor discovers such error or omission, he shall immediately notify the Owner's Representative. The Owner's Representative will then make such clarification and interpretations as may be deemed necessary for the Landscape Contractor to fulfill the intent of the Contract.

3. The intent of these drawings, details and associated specifications is for the Landscape Contractor to provide the Owner with a complete, accurate, functionally and technically sound project as generally described in these documents. In most cases, unless explicitly noted otherwise, drawing symbols are used to represent complete-in-place systems to be provided as part of the base bid. All elements shown or implied by the drawings, if not specifically detailed or specified, shall be installed per building codes, manufacturer's recommendations, state highway department standards, city standards and specifications and standard industry practices.

4. All work within this project shall conform to current local codes, ordinances, as well as all other applicable governing regulations in effect.

5. The Landscape Contractor shall obtain, at his expense, all specialty permits needed for specific items included with the work, unless otherwise indicated in the Contract Documents. Landscape Contractor shall comply with all notifications and inspection requirements.

6. Unless specifically noted otherwise in the Contract Documents, the Landscape Contractor shall obtain and coordinate all technical tests and reports by a certified independent laboratory or agency as outlined in the Specifications or these Drawings. The Owner may, at the Owner's sole discretion, provide separate testing and/or inspection service and the Landscape Contractor is required to fully coordinate with those consultants/Landscape Contractors. Owner is to pay for all soils and materials testing.

7. An Existing Condition Survey has been provided to the Owner by registered surveyors under separate contracts for the basis of design. It is not to be considered as part of these Contract Documents. These survey plans have been reformatted and included in these documents. The Landscape Contractor is required to visit the site to verify information. Without exception, any deviations or omissions found between these plans and existing site conditions shall immediately be brought to the attention of the Owner's Representative.

8. Existing utility information and utility information for proposed work by others that is shown in these documents is approximate and for general information only. It is not intended to depict exact locations of all utilities. The Landscape Contractor shall notify all utility companies to stake and field verify the locations including depths of all utilities (existing, proposed by others, or currently under construction), prior to commencing any related operations. Landscape Contractor shall maintain utility locations/structures during all remaining phases of work. The Landscape Contractor shall report to the Owner's Representative any utilities that may conflict with proposed work. The Landscape Contractor shall explore, understand, and coordinate (with other Sub-Contractors) all utilities impacts prior to submitting bid and shall be responsible for any modifications or damages to utility lines, structures or injuries therefrom. For existing utility information contact The One-Call Board of Texas (OCB) at 811 or 800-545-6005. A minimum notice of 3 business days in advance of locational needs is required.

9. These drawings do not specify safety materials, staffing, equipment, methods or sequencing to protect persons and property. It shall be the Landscape Contractor's sole responsibility to direct and implement safety operations, staffing, procedures to protect the Owner and his representatives, new improvements, property, other Landscape Contractors, the public and others.

10. The Landscape Contractor shall meet periodically with the Owner's Representative to determine marshalling areas, on-site storage, and Landscape Contractor staff parking and to coordinate security issues, construction sequencing/phasing, scheduling, and maintaining public, emergency, handicapped or operations access before starting the related work. The Landscape Contractor shall meet any "Construction Criteria" or requirements shown on any Contract Documents, phasing plans or any imposed plan by the Owner as a part of the Base Bid.

11. Some work in this Contract may occur concurrent with work by others. Phasing, sequencing and coordination, with work by others, and on-going facility operations in and around the site area, is a part of the scope of work for this project. Notice to proceed with work in any general area shall be obtained from the Owner.

12. The Landscape Contractor will be required to complete all the work of this project according to these proposed drawings or subsequent clarification. A strict period of performance, including dates of substantial completion (for all and/or portions) and liquidation damages may be an integral element of the Contract.

13. Any site improvements requiring removal under this contract shall be properly and legally disposed off-site or, at the Owner's option, surrendered/stockpiled in an approved on-site location per the direction of the Owner's Representative.

14. The Landscape Contractor is required to maintain a complete and "up-to-date" set of all Contract Documents, including clarifications, change orders, etc., in good condition, at the construction site at all times. This set of documents will be made immediately available for review by the Owner's Representative and/or authorized Consultants upon request. Complete "As-Built" drawings and document submittals are also a requirement of this contract.

15. Maintenance, warranties and performance guarantees may be a requirement of this contract - see specifications.

16. Notes and details on specific drawings shall take precedence over general notes and typical details. The Landscape Contractor shall refer to all other Division Notes, Sheets Notes, Drawings and Project Contract Documents for additional information.

17. Landscape Contractor shall refer to other related drawings for all other related improvements that will impact this project and require coordination.

GRADING NOTES

1. These grading plans are intended to show vertical control of the site and are based upon the benchmarks, existing elevations and topography as provided by the Owner's surveyor. However, the Landscape Contractor, upon submittal of bid, agrees to accept the site grades and make all adjustments required to accomplish the work as proposed. Additionally proposed design elevations for adjacent construction projects may have to be incorporated if necessary. (Construction drawings for work by others, if applicable, are available upon request). Staking of future adjacent improvements, by this contract phase or by others, may be required if directed by the Owner's Representative to ensure proper coordination and requested staking is to be provided as part of this Base Bid.

2. This Landscape Contractor shall verify all existing grades to remain and all adjacent new construction grades for compliance with those shown, prior to bid and construction. All deviations or conflicts with proposed work shall be reported immediately (with follow-up written) notice within 24 hours to the Owner's Representative for direction to proceed.

3. It is this Landscape Contractor's responsibility to provide proper positive drainage throughout this contract area. Field conditions shall be verified in conjunction with the proposed elevations to ensure that adequate drainage is provided. Report deviations or conflicts to Owner's Representative.

4. All design elevations shown are "finished grades" unless otherwise indicated. Landscape Contractors shall refer to drawings, details and specifications regarding depth of sub-grade materials required to construct project improvements.

5. All topsoil and/or drainage way muck excavation shall be saved and stockpiled in approved locations for future use.

LAYOUT NOTES

1. All work shown shall be field staked or otherwise denoted and subject to field verification, review and approval by the Owner's Representative prior to any constructions or demolition. Field staking of all proposed work and adjacent construction (even if future work by others) may be required by the Owner's Representative prior to approval of all improvements and adequate stakes shall be provided by Landscape Contractor's surveyor.

2. To expedite the layout of the site layout coordinates and/or grids may have been established in the Drawings. These points shall be field staked by the Landscape Contractor's surveyor as a part of this contract. The establishment of these points shall be approved by the Owner's Representative prior to any construction in those areas and will assist the Landscape Contractor in the layout of all site improvements as shown on drawing or otherwise.

3. The construction tolerances for this project are minimal and the dimensions shown are to be strictly adhered to.

4. Computed dimensions shall take precedence over scaled dimensions. Large scale drawings shall take precedence over small scale drawings. Dimensions shown with (+/-) shall be the only layout information allowed to vary, and may only vary to the tolerances given.

5. The Landscape Contractor is responsible to provide complete-in-place systems and a complete project, and any intermittent or periodic approvals received for portions of work, stakes, grades, or forms (by the Owner's Representative, architects, engineers, or others) shall not waive the Landscape Contractor's requirements to comply with the intent of any and all portions of this contract.

6. Field staked locations for walks, roads, swales, walls, curbs, structures etc. may be requested by the Owner's Representative. Specific layout information will be provided to the Landscape Contractor by the Owner's Representative in AutoCAD (.dwg) format when requested.

7. It is the intent and requirement of this contract to provide curvilinear walks, walls and curbs with smooth transitions and arcs (both horizontal and vertical). Straight segments and abrupt transitions will not be accepted unless shown as such on the plans. Wood curving forms may be required to obtain the proper effects.

8. When indicated on the Drawings, improvements that are to be coordinated on site with the Owner's Representative will be field staked or painted for approval of layout by the Owner's Representative prior to installation. Notify the Owner's Representative a minimum of 24 hours in advance for review. Improvements installed without field approval by Owner's Representative may be rejected. Rejected work must be removed and replaced.

ABBREVIATION LEGEND

BOC = BACK OF CURB
BR = BOTTOM OF RAMP
BS = BOTTOM OF STAIR
BW = BOTTOM OF WALL
C-C = CENTER TO CENTER
COL = COLUMN
C.P. = CENTER POINT
CY = CUBIC YARDS
CIP = CAST IN PLACE
DG = DECOMPOSED GRANITE
ELEV = ELEVATION
E.O.P. = EDGE OF PAVEMENT
FF = FINISH FLOOR
FG = FINISH GRADE
FOC = FACE OF CURB
IPM = INTEGRATED PEST MANAGEMENT
IRR = IRRIGATION
LOC = LIMITS OF CONSTRUCTION
OC = ON CENTER
OCEW = ON CENTER EACH WAY
OHE = OVERHEAD ELECTRIC
PL = PROPERTY LINE
POB= POINT OF BEGINNING
PUE = PUBLIC UTILITY EASEMENT
R = RADIUS
RCW = RECLAIMED WATER
ROW = RIGHT OF WAY
SF = SQUARE FEET
STD = STANDARD
TB = TOP OF BENCH
TG = TOP OF GRATE (ELEVATION)
TP = TOP OF PIER
TR = TOP OF RAMP
TS = TOP OF STAIR
TW = TOP OF WALL
TYP = TYPICAL
UE = UNDERGROUND ELECTRIC
W = WATER
WW = WASTE WATER
℄ = CENTERLINE

MATERIALS SCHEDULE

STONE/ CONCRETE/ BRICK					
DESCRIPTION	COLOR	CUT	SIZE	MORTAR	CONTACT
LIMESTONE VENEER FOR MASONRY WALLS	70% AUSTIN WHITES 30% AUSTIN NICOTINE	CHOPPED RANDOM SQUARES AND RECTANGLES	MATCH SIZES OF STONE IN SINGLE WYTHE WALL AS DETERMINED BY STRUCTURAL ENGINEER. DEPTHS TO BE ~4"	RAKE SMOOTH, COLOR SHALL BE LIGHTEST COLOR OF PROPOSED STONE; SUBMIT SAMPLES FOR APPROVAL	AAA NATURAL STONE 877-862-5294 http://aaa-naturalstone.com/
SINGLE WYTHE POST TENSIONED LIMESTONE WALL	70% AUSTIN WHITES 30% AUSTIN NICOTINE	CHOPPED RANDOM SQUARES AND RECTANGLES	DETERMINED BY STRUCTURAL ENGINEER	RAKE SMOOTH, COLOR SHALL BE LIGHTEST COLOR OF PROPOSED STONE; SUBMIT SAMPLES FOR APPROVAL	AAA NATURAL STONE 877-862-5294 http://aaa-naturalstone.com/
LIMESTONE CAP	AUSTIN WHITES	CHOPPED	3-8" LENGTH AND WIDTH, 6" DEPTH	RAKE SMOOTH, COLOR SHALL BE LIGHTEST COLOR OF PROPOSED STONE; SUBMIT SAMPLES FOR APPROVAL	AAA NATURAL STONE 877-862-5294 http://aaa-naturalstone.com/
SPLIT FACE CMU WALL	AUSTIN LIMESTONE	N/A	8x8x16" SPLITFACE ONE SIDED & TWO SIDED	RAKE SMOOTH, COLOR SHALL MATCH SPLIT FACE; SUBMIT SAMPLES FOR APPROVAL	CAPITOL PRODUCTS 512-863-9967 http://www.capitolproductsinc.com
SPLIT FACE CMU TOP COURSE	AUSTIN LIMESTONE	N/A	4x8x16" SPLITFACE SOLID		
CMU BACK UP WALL	STANDARD GREY	N/A	8x8x16"	FLUSH MORTAR JOINTS	

NOTE: ALL EXPOSED CMU TO BE LIMESTONE COLORED.

NOTE:

CONTRACTOR TO PROVIDE 4'x4' MOCKUP OF ALL MASONRY, SPLITFACE CMU BLOCK WALLS, AND CAPS FOR APPROVAL BY OWNER'S REPRESENTATIVE. APPROVED MOCK UP MAY BE INCORPORATED INTO THE WORK

rvi
planning + landscape architecture
712 Congress Avenue, Suite 300
Austin, Texas 78704
(512) 480-0032

REGISTERED LANDSCAPE ARCHITECT
STATE OF TEXAS
01.28.2015

NOTE:
These drawings are only intended to show the DESIGN INTENT and are not meant to provide fully detailed construction information regarding materials, structure or methods. The Contractor shall be responsible for the design/build construction of the project,preparation of shop drawings for all engineered elements, and structural integrity and durability of the improvements.

TRAVISSO
SECTION 1
WATER RECLAMATION PLANT

ISSUED	REVISIONS
10.01.2014	1 VE REV.
01.28.2015	

PROJECT NO.: 123924
FILE: L:\2012\123924\DD
REF: L:\2012\123924\
DRW: PC, JW, RR
RVW: MS, CL

Hardscape Notes

October 1 , 2014

LH-1

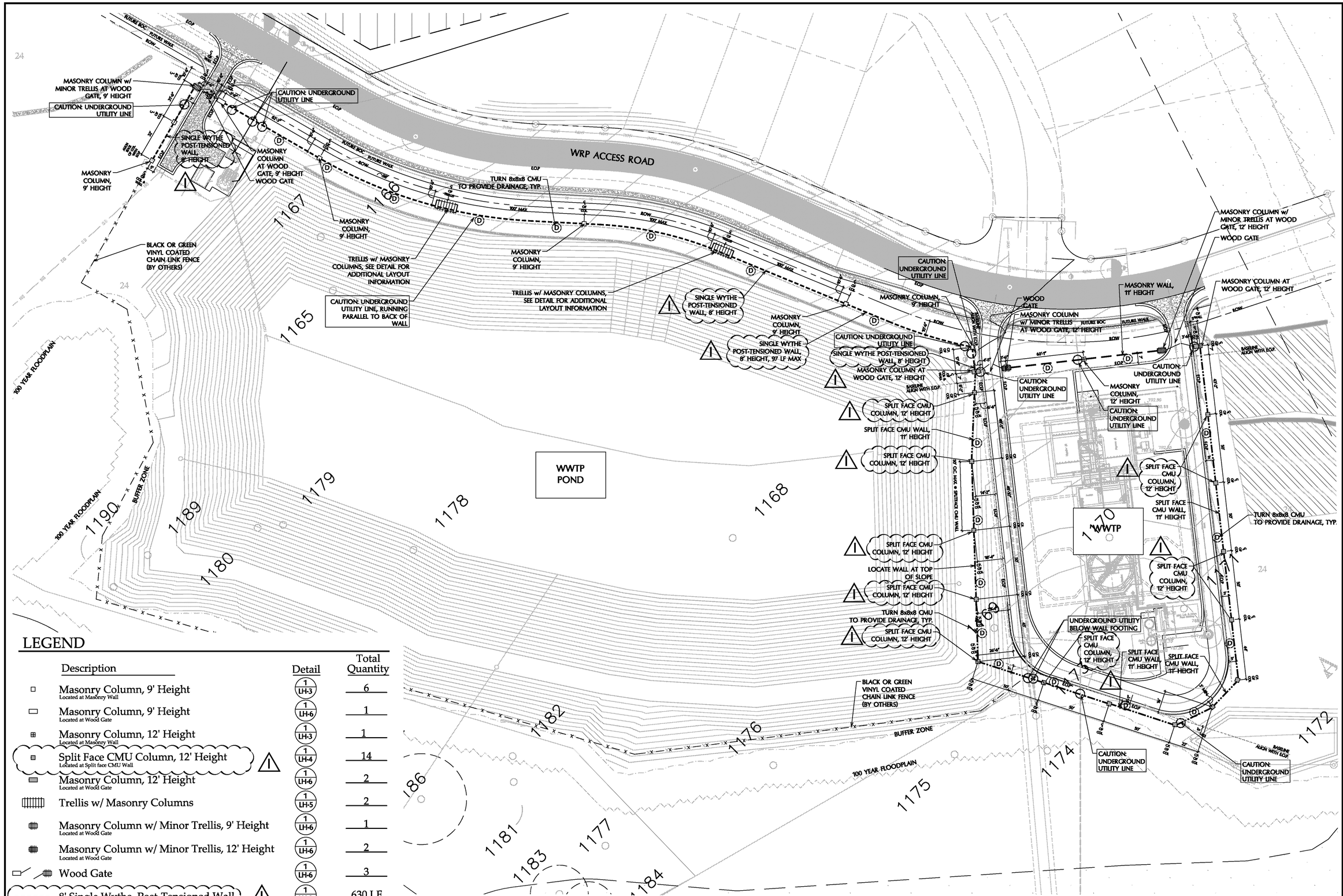

LEGEND

Description	Detail	Total Quantity
Masonry Column, 9' Height Located at Masonry Wall	1 / LH-3	6
Masonry Column, 9' Height Located at Wood Gate	1 / LH-6	1
Masonry Column, 12' Height Located at Masonry Wall	1 / LH-3	1
Split Face CMU Column, 12' Height Located at Split face CMU Wall	1 / LH-4	14
Masonry Column, 12' Height Located at Wood Gate	1 / LH-6	2
Trellis w/ Masonry Columns	1 / LH-5	2
Masonry Column w/ Minor Trellis, 9' Height Located at Wood Gate	1 / LH-6	1
Masonry Column w/ Minor Trellis, 12' Height Located at Wood Gate	1 / LH-6	2
Wood Gate	1 / LH-6	3
8' Single Wythe, Post-Tensioned Wall	1 / LH-3	630 LF
11' Masonry Wall	1 / LH-3	105 LF
11' Splitface CMU Wall	1 / LH-4	619 LF

NOTE: 1. Sizes of fences, walls, & columns are not to scale and are drawn to depict general location only. For specific sizing refer to details on LH-3 - LH-6.

1 PHASE 1 WWTP

SCALE : 1" = 30'

0 15 30 60

NORTH

rvi planning + landscape architecture

712 Congress Avenue, Suite 300
Austin, Texas 78704
(512) 480-0032

REGISTERED LANDSCAPE ARCHITECT — STATE OF TEXAS

01.28.2015

NOTE:
These drawings are only intended to show the DESIGN INTENT and are not meant to provide fully detailed construction information regarding materials, structure or methods. The Contractor shall be responsible for the design/build construction of the project,preparation of shop drawings for all engineered elements, and structural integrity and durability of the improvements.

TRAVISSO
SECTION 1
WATER RECLAMATION PLANT

ISSUED	REVISIONS
10.01.2014	1
01.28.2015	2 VE REV.
	3

PROJECT NO.: 123924
FILE: L:\2012\123924\DD
REF: L:\2012\123924\
DRW: PC, JW, RR
RVW: MS, CL

Hardscape Layout Plan

October 1 , 2014

LH-2

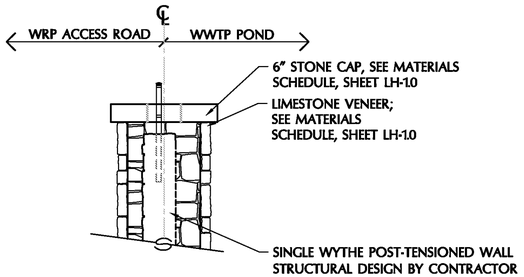

C. ENLARGEMENT

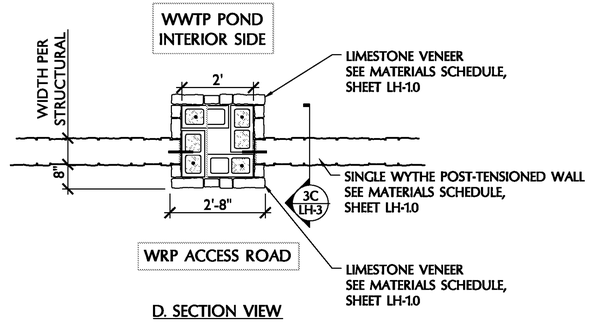

D. SECTION VIEW

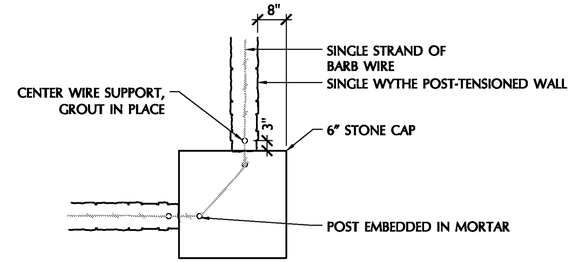

PLAN

3 SINGLE WYTHE POST-TENSIONED WALL ENLARGEMENTS

SCALE: 1/2" = 1'-0"

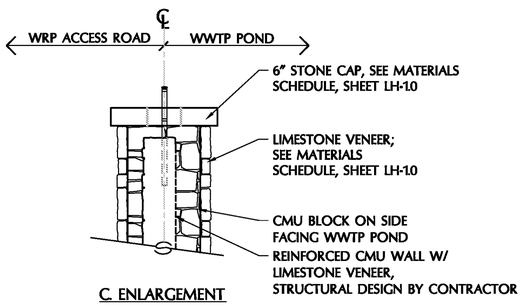

C. ENLARGEMENT

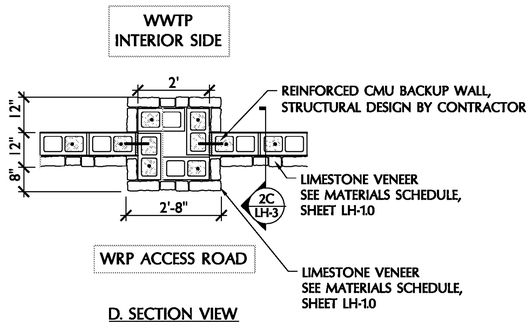

D. SECTION VIEW

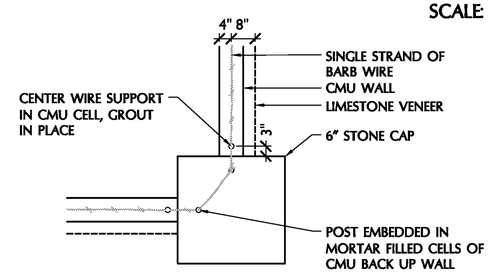

PLAN

2 REINFORCED CMU WALL ENLARGEMENTS

SCALE: 1/2" = 1'-0"

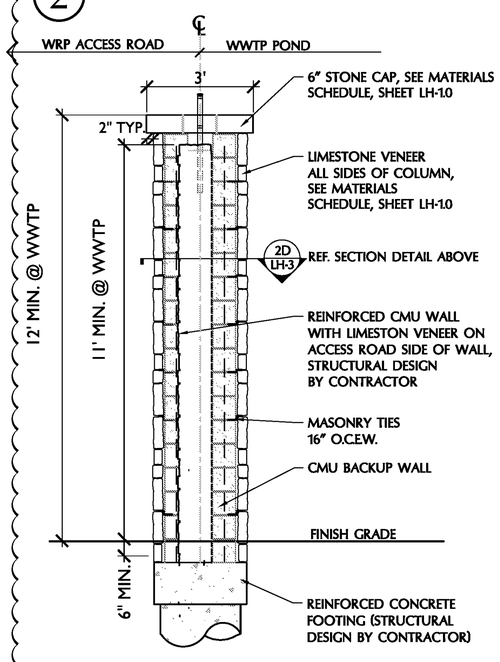

B-2. COLUMN SECTION VIEW WITH WALL IN FOREGROUND

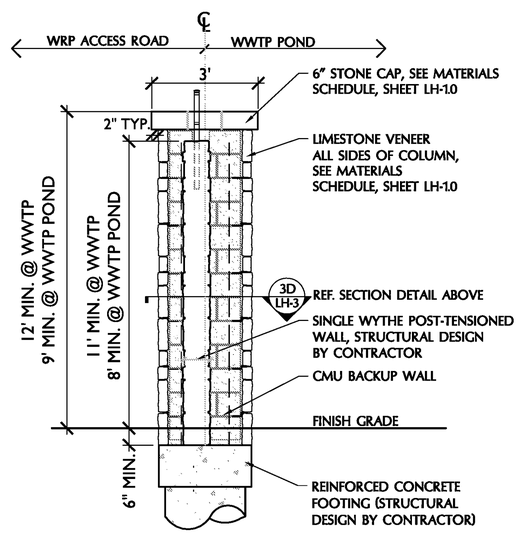

B. COLUMN SECTION VIEW WITH WALL IN FOREGROUND

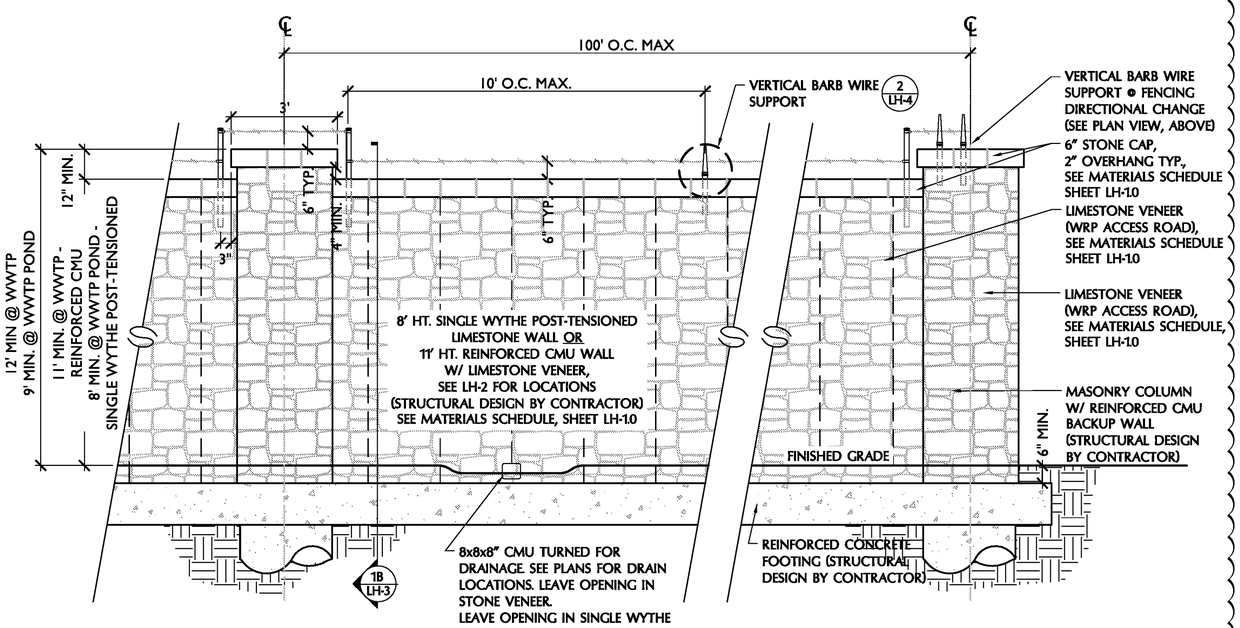

A. ELEVATION VIEW

1 POST TENSIONED LIMESTONE WALL AND CMU VENEER WALL w/ MASONRY COLUMN

SCALE: 1/2" = 1'-0"

CONTRACTOR TO SUBMIT SEALED SHOP DRAWINGS PREPARED BY A LICENSED STRUCTURAL ENGINEER FOR ALL CONCRETE FOOTINGS, REINFORCED WALLS, TRELLISES, POSTS @ BARBED WIRE FENCE & SINGLE WYTHE POST-TENSIONED MASONRY WALLS.

THE CONSTRUCTION SHALL NOT BEGIN UNTIL STRUCTURAL PLANS FROM AN ENGINEER HAVE BEEN RECEIVED AND REVIEWED.

rvi planning + landscape architecture
712 Congress Avenue, Suite 300
Austin, Texas 78704
(512) 480-0032

REGISTERED LANDSCAPE ARCHITECT STATE OF TEXAS
01.28.2015

NOTE:
These drawings are only intended to show the DESIGN INTENT and are not meant to provide fully detailed construction information regarding materials, structure or methods. The Contractor shall be responsible for the design/build construction of the project,preparation of shop drawings for all engineered elements, and structural integrity and durability of the improvements.

TRAVISSO
SECTION 1
WATER RECLAMATION PLANT

ISSUED	REVISIONS
10.01.2014	
01.28.2015	1 VE REV.

PROJECT NO.: 123924
FILE: L:\2012\123924\DD
REF: L:\2012\123924\
DRW: PC, JW, RR
RVW: MS, CL

Details

October 1 , 2014

LH-3

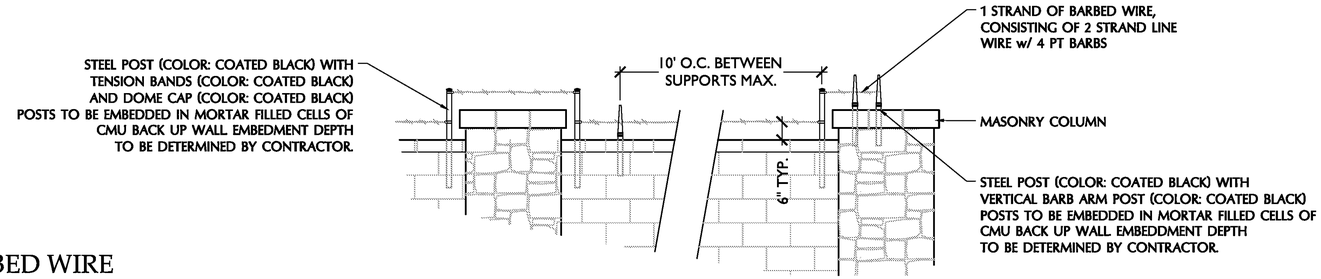

2 BARBED WIRE

SCALE: 1/2" = 1'-0"

1 CONTRACTOR TO SUBMIT SEALED SHOP DRAWINGS PREPARED BY A LICENSED STRUCTURAL ENGINEER FOR ALL CONCRETE FOOTINGS, REINFORCED WALLS, TRELLISES, POSTS ⊙ BARBED WIRE FENCE & SINGLE WYTHE POST-TENSIONED MASONRY WALLS.

THE CONSTRUCTION SHALL NOT BEGIN UNTIL STRUCTURAL PLANS FROM AN ENGINEER HAVE BEEN RECEIVED AND REVIEWED.

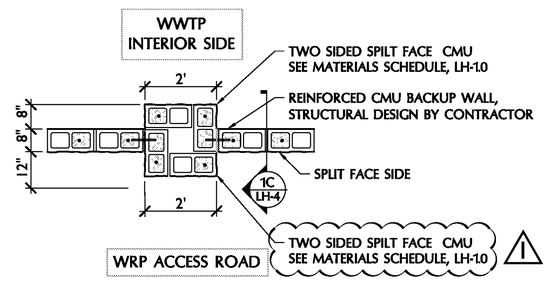

D. SECTION VIEW
Scale: 1/2"=1'-0"

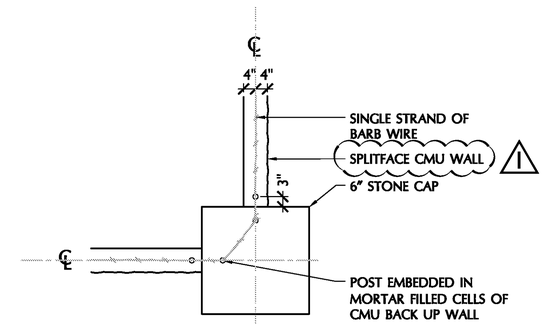

PLAN
Scale: 1/2"=1'-0"

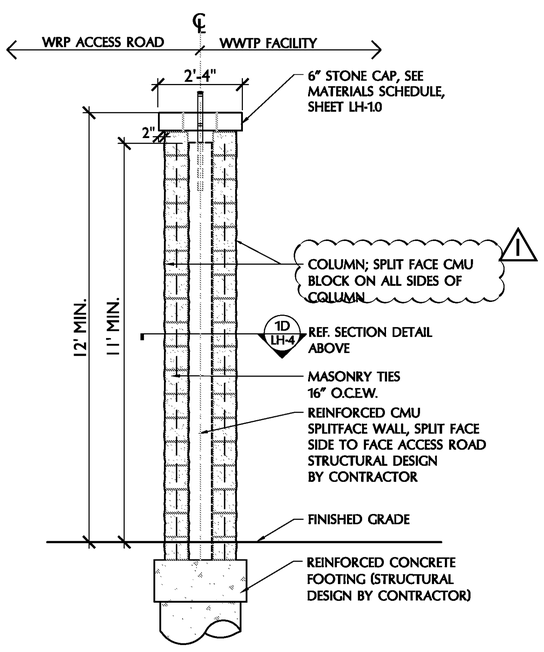

B. COLUMN SECTION VIEW
WITH WALL IN FOREGROUND
Scale: 1/2"=1'-0"

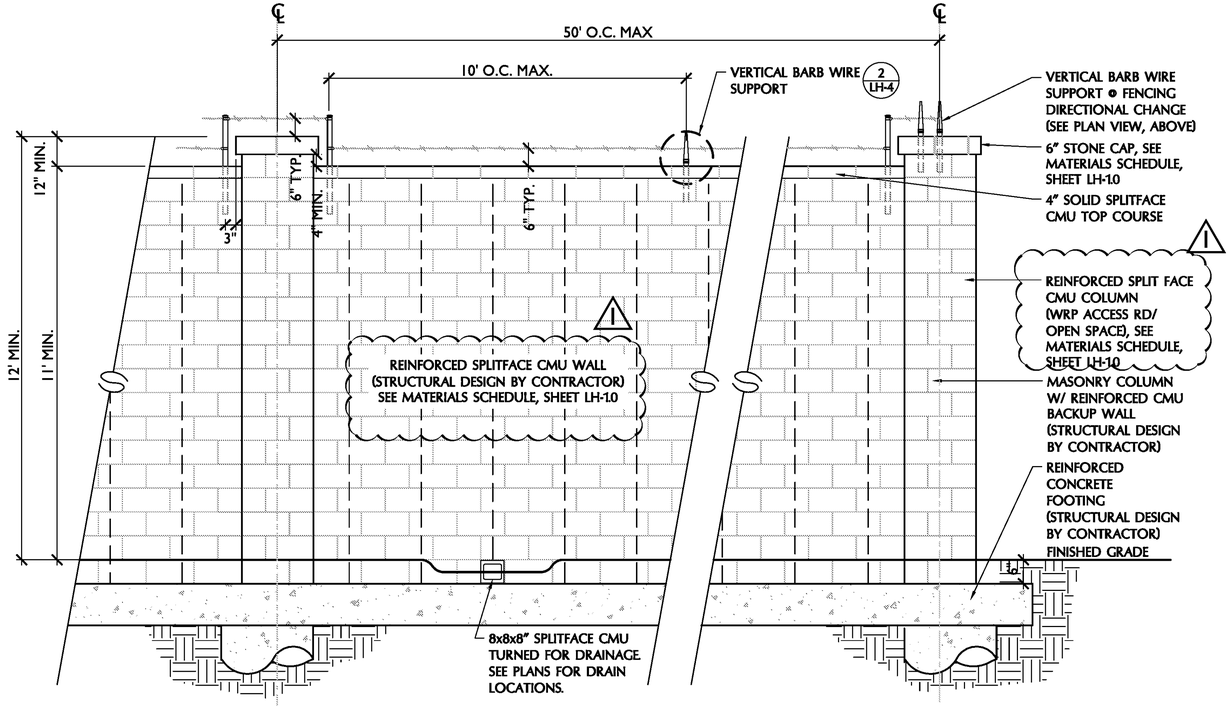

A. ELEVATION VIEW

1 SPLITFACE CMU WALL w/ MASONRY COLUMN

SCALE: 1/2" = 1'-0"

rvi planning + landscape architecture
712 Congress Avenue, Suite 300
Austin, Texas 78704
(512) 480-0032

REGISTERED LANDSCAPE ARCHITECT STATE OF TEXAS
01.28.2015

NOTE:
These drawings are only intended to show the DESIGN INTENT and are not meant to provide fully detailed construction information regarding materials, structure or methods. The Contractor shall be responsible for the design/build construction of the project,preparation of shop drawings for all engineered elements, and structural integrity and durability of the improvements.

TRAVISSO
SECTION 1
WATER RECLAMATION PLANT

ISSUED	REVISIONS
10.01.2014	
01.28.2015	1 VE REV.

PROJECT NO.: 123924
FILE: L:\2012\123924\DD
REF: L:\2012\123924\
DRW: PC, JW, RR
RVW: MS, CL

Details

October 1 , 2014

LH-4

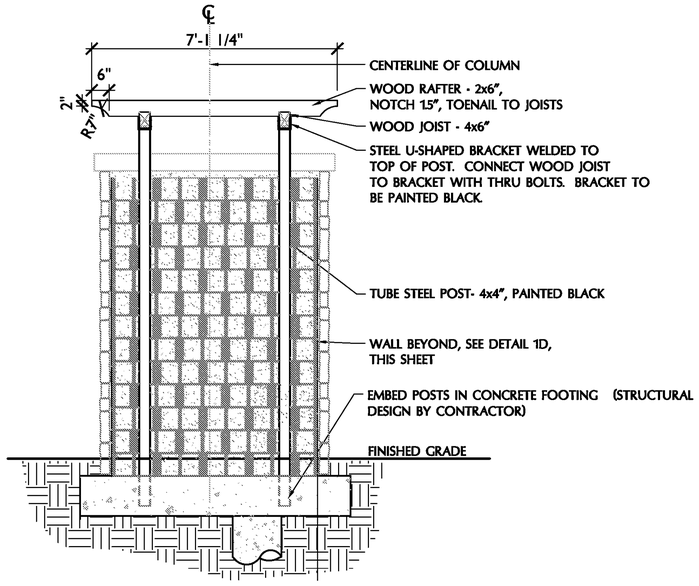

C. SECTION VIEW - POSTS
Scale: 1/2"=1'-0"

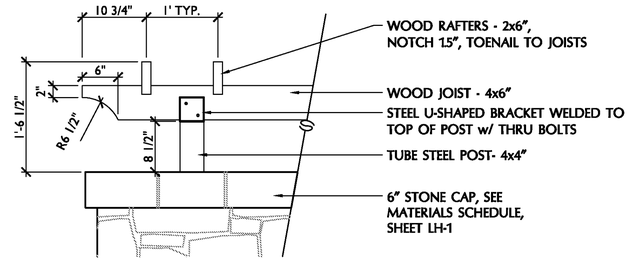

E. BEAM, RAFTER & POST DETAIL ENLARGEMENT
Scale: 1"=1'-0"

CONTRACTOR TO SUBMIT SEALED SHOP DRAWINGS PREPARED BY A LICENSED STRUCTURAL ENGINEER FOR ALL CONCRETE FOOTINGS, REINFORCED WALLS, TRELLISES, POSTS & BARBED WIRE FENCE & SINGLE WYTHE POST-TENSIONED MASONRY WALLS.

THE CONSTRUCTION SHALL NOT BEGIN UNTIL STRUCTURAL PLANS FROM AN ENGINEER HAVE BEEN RECEIVED AND REVIEWED.

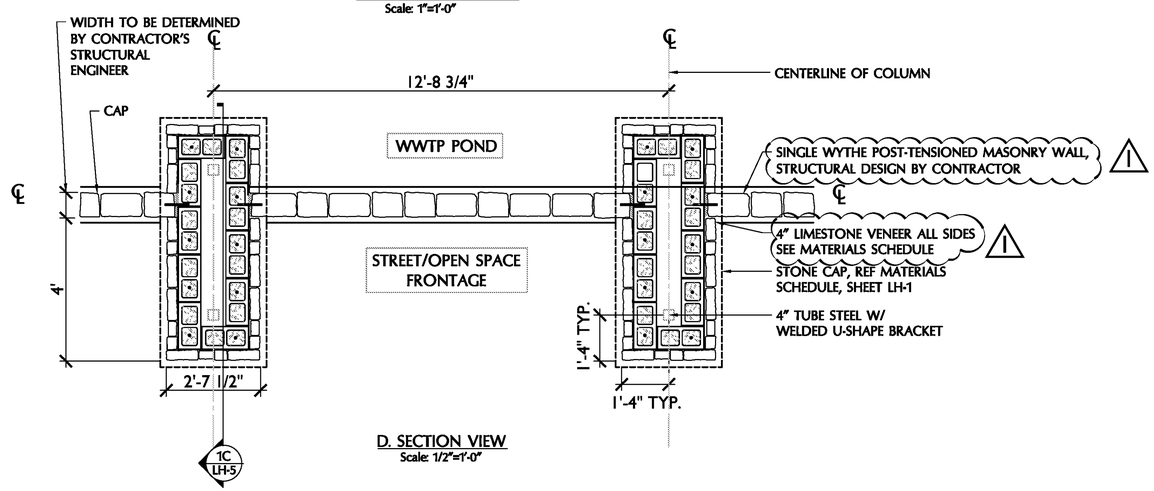

D. SECTION VIEW
Scale: 1/2"=1'-0"

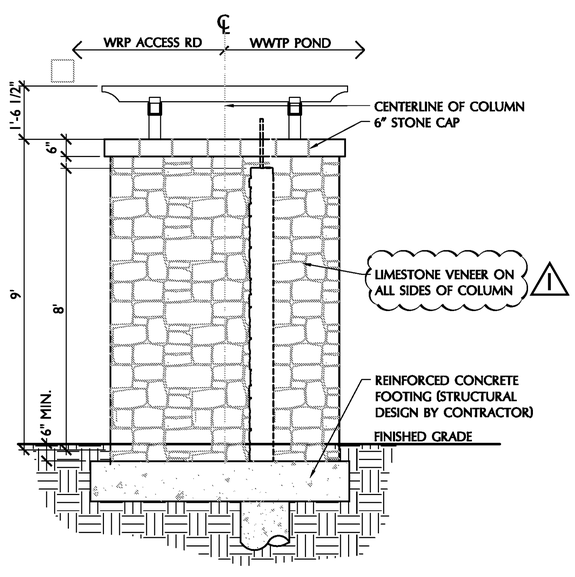

B. ELEVATION VIEW - PROFILE
Scale: 1/2"=1'-0"

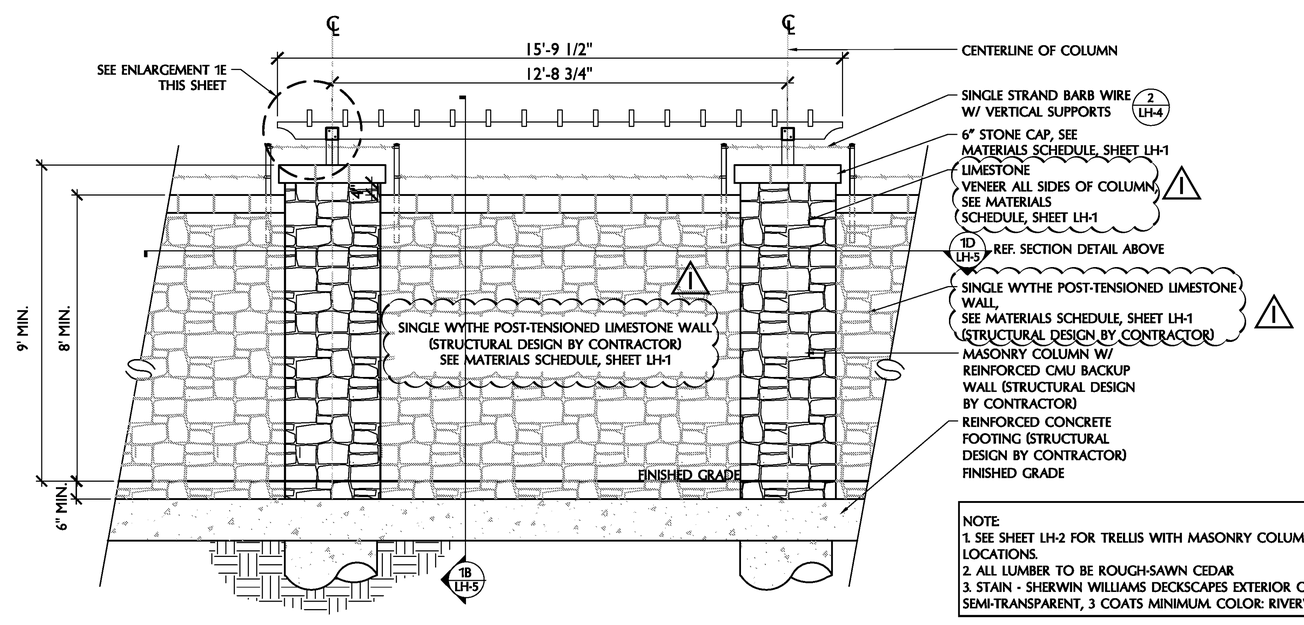

A. ELEVATION VIEW
Scale: 1/2"=1'-0"

NOTE:
1. SEE SHEET LH-2 FOR TRELLIS WITH MASONRY COLUMNS LOCATIONS.
2. ALL LUMBER TO BE ROUGH-SAWN CEDAR
3. STAIN - SHERWIN WILLIAMS DECKSCAPES EXTERIOR OIL SEMI-TRANSPARENT, 3 COATS MINIMUM. COLOR: RIVERWOOD

1 TRELLIS w/ MASONRY COLUMNS

SCALE: 1/2" = 1'-0"

rvi planning + landscape architecture
712 Congress Avenue, Suite 300
Austin, Texas 78704
(512) 480-0032

REGISTERED LANDSCAPE ARCHITECT STATE OF TEXAS 01.28.2015

NOTE:
These drawings are only intended to show the DESIGN INTENT and are not meant to provide fully detailed construction information regarding materials, structure or methods. The Contractor shall be responsible for the design/build construction of the project,preparation of shop drawings for all engineered elements, and structural integrity and durability of the improvements.

TRAVISSO
SECTION 1
WATER RECLAMATION PLANT

ISSUED	REVISIONS
10.01.2014	1
01.28.2015	2 VE REV.
	3

PROJECT NO.: 123924
FILE: L:\2012\123924\DD
REF: L:\2012\123924\
DRW: PC, JW, RR
RVW: MS, CL

Details

October 1 , 2014

LH-5

THE CONSTRUCTION SHALL NOT BEGIN UNTIL STRUCTURAL PLANS FROM AN ENGINEER HAVE BEEN RECEIVED AND REVIEWED.

CONTRACTOR TO SUBMIT SEALED SHOP DRAWINGS PREPARED BY A LICENSED STRUCTURAL ENGINEER FOR ALL CONCRETE FOOTINGS, REINFORCED WALLS, TRELLISES, POSTS ⊙ BARBED WIRE FENCE & SINGLE WYTHE POST-TENSIONED MASONRY WALLS. 1

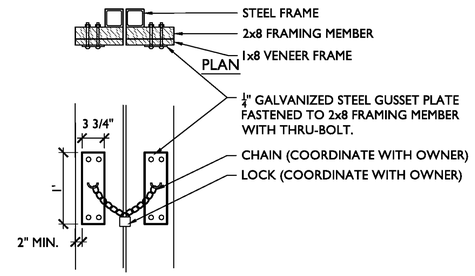

G. FENCE LATCH DETAIL
Scale: 1"=1'-0"

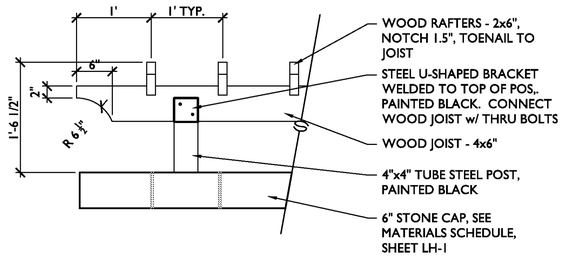

F. BEAM, RAFTER & POST DETAIL ENLARGEMENT
Scale: 1"=1'-0"

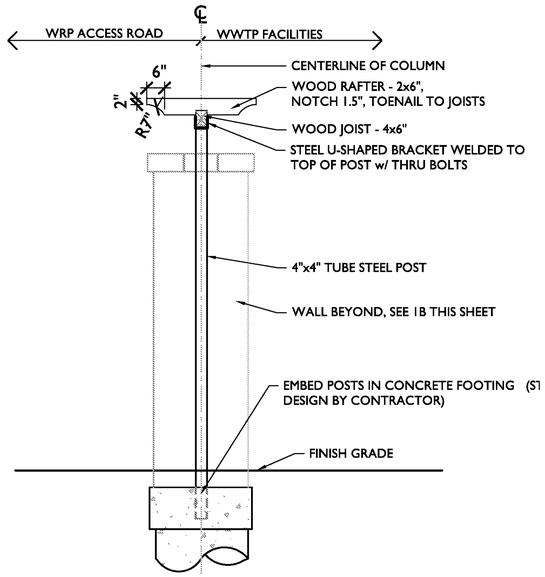

C. SECTION VIEW - POST

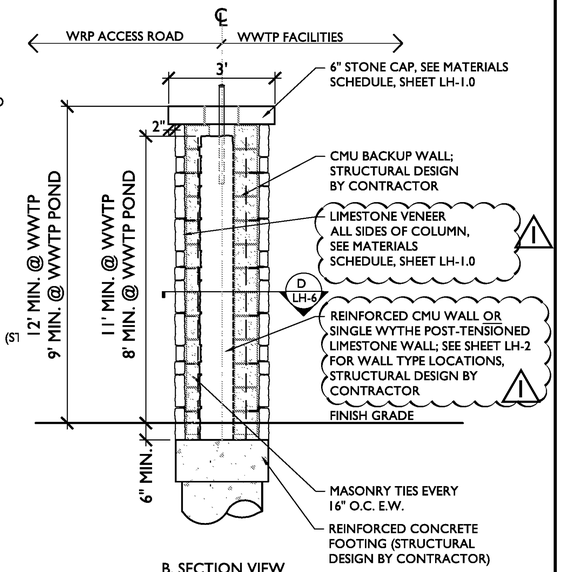

B. SECTION VIEW

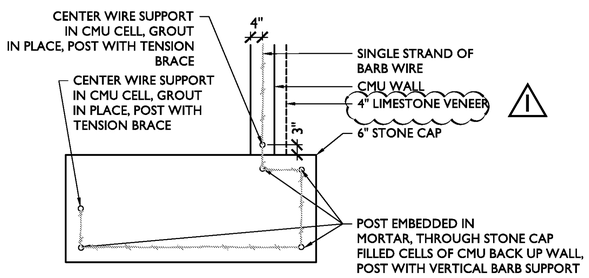

E. PLAN

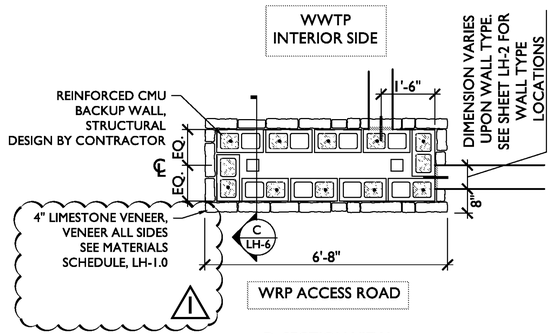

D. SECTION VIEW

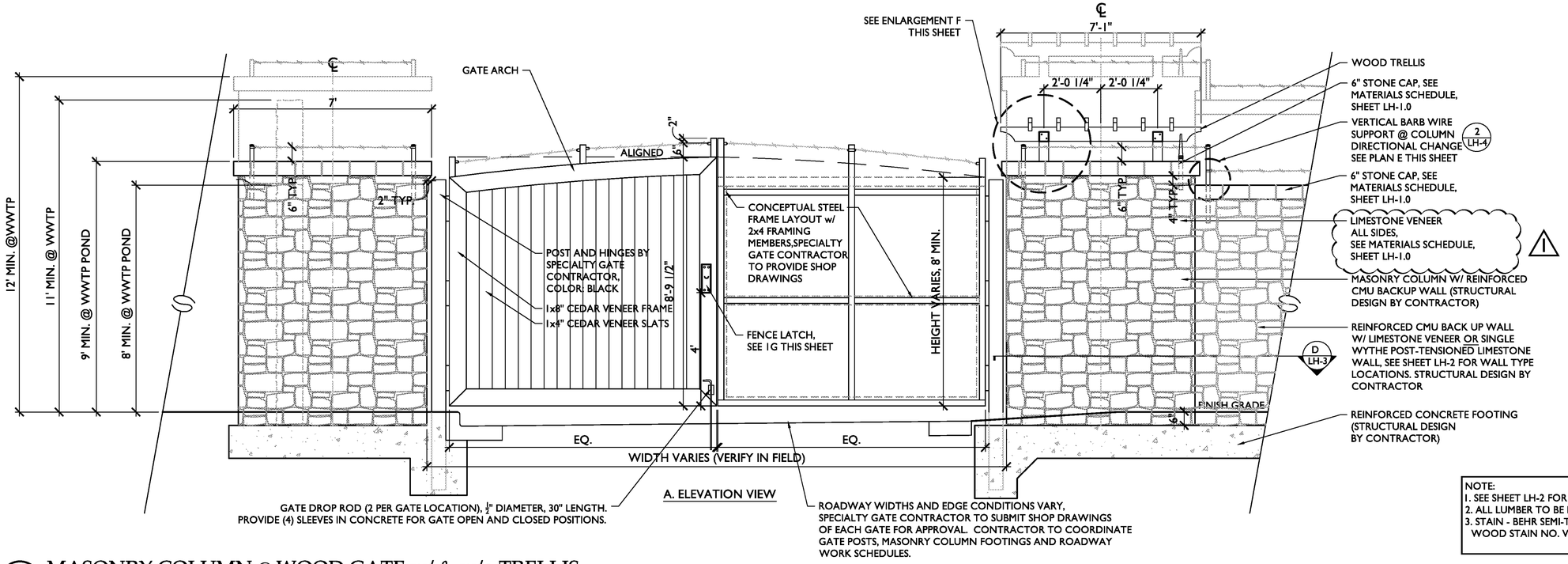

A. ELEVATION VIEW

NOTE:
1. SEE SHEET LH-2 FOR TRELLIS LOCATIONS.
2. ALL LUMBER TO BE ROUGH-SAWN CEDAR
3. STAIN - BEHR SEMI-TRANSPARENT DECK FENCE AND SIDING WOOD STAIN NO. VALISEST-123, 2 COATS

1 MASONRY COLUMN @ WOOD GATE w/ & w/o TRELLIS

SCALE: 1/2" = 1'-0"

rvi planning + landscape architecture
712 Congress Avenue, Suite 300
Austin, Texas 78704
(512) 480-0032

REGISTERED LANDSCAPE ARCHITECT STATE OF TEXAS 01.28.2015

NOTE:
These drawings are only intended to show the DESIGN INTENT and are not meant to provide fully detailed construction information regarding materials, structure or methods. The Contractor shall be responsible for the design/build construction of the project,preparation of shop drawings for all engineered elements, and structural integrity and durability of the improvements.

TRAVISSO
SECTION 1
WATER RECLAMATION PLANT

ISSUED	REVISIONS
10.01.2014	
01.28.2015	1 VE REV.

PROJECT NO.: 123924
FILE: L:\2012\123924\DD
REF: L:\2012\123924\
DRW: PC, JW, RR
RVW: MS, CL

Details

October 1 , 2014

LH-6